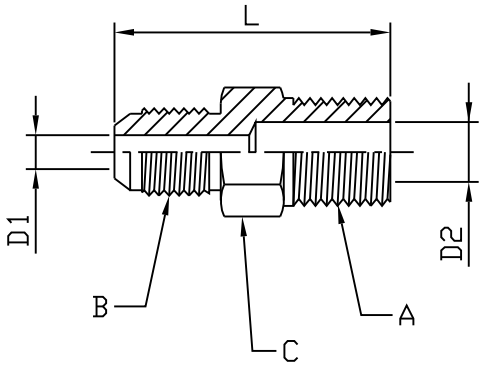


| PART NUMBER | TUBE OD | A NPTF | B UN/UNF-2A | L | C | D1 | D2 | Working Pressure |
|---|---|---|---|---|---|---|---|---|
| 28701 | 1/4 | 1/8-27 | 7/16-20 | 1.22 | 0.44 | 0.17 | 0.19 | 3250 psi |
| 28702 | 1/4 | 1/4-18 | 7/16-20 | 1.38 | 0.56 | 0.17 | 0.30 | 3250 psi |
| 28703 | 1/4 | 3/8-18 | 7/16-20 | 1.38 | 0.69 | 0.17 | 0.41 | 3250 psi |
| 28704 | 5/16 | 1/8-27 | 1/2-20 | 1.22 | 0.56 | 0.23 | 0.19 | 3250 psi |
| 28705 | 5/16 | 1/4-18 | 1/2-20 | 1.36 | 0.56 | 0.23 | 0.30 | 3250 psi |
| 28706 | 3/8 | 1/8-27 | 9/16-18 | 1.19 | 0.63 | 0.28 | 0.28 | 3250 psi |
| 28707 | 3/8 | 1/4-18 | 9/16-18 | 1.39 | 0.63 | 0.29 | 0.29 | 3250 psi |
| 28708 | 3/8 | 3/8-18 | 9/16-18 | 1.38 | 0.75 | 0.30 | 0.41 | 3250 psi |
| 28709 | 3/8 | 1/2-14 | 9/16-18 | 1.58 | 0.88 | 0.30 | 0.53 | 3250 psi |
| 28710 | 1/2 | 1/4-18 | 3/4-16 | 1.50 | 0.81 | 0.39 | 0.28 | 3250 psi |
| 28711 | 1/2 | 3/8-18 | 3/4-16 | 1.53 | 0.81 | 0.39 | 0.41 | 3250 psi |
| 28712 | 1/2 | 1/2-14 | 3/4-16 | 1.72 | 0.88 | 0.39 | 0.53 | 3250 psi |
| 28713 | 1/2 | 3/4-14 | 3/4-16 | 1.73 | 1.13 | 0.39 | 0.72 | 2600 psi |
| 28714 | 5/8 | 3/8-18 | 7/8-14 | 1.63 | 0.94 | 0.48 | 0.40 | 3250 psi |
| 28715 | 5/8 | 1/2-14 | 7/8-14 | 1.89 | 0.94 | 0.48 | 0.53 | 3250 psi |
| 28716 | 5/8 | 3/4-14 | 7/8-14 | 1.92 | 1.13 | 0.48 | 0.72 | 2600 psi |
| 28717 | 3/4 | 3/4-14 | 1-1/16-12 | 2.04 | 1.13 | 0.61 | 0.72 | 2600 psi |
| 28718 | 3/4 | 1-11-1/2 | 1-1/16-12 | 2.21 | 1.38 | 0.61 | 0.94 | 1950 psi |

ASTM: B-16

TEMP RANGE: -65° - 250° F

**"This drawing contains proprietary and confidential information of Midland Metal Mfg., Co. and shall not be reproduced, copied, loaned, or submitted to outside parties for examination without our consent"**

| NO. | PCA | Date | Revision |
|---|---|---|---|
| 4 | | | |
| 3 | | | |
| 2 | | | B (02/04/04) MIDLAND |
| 1 | | | A (10/21/03) |

TOLERANCES ARE:
DECIMALS.
.X:± 0.03
.XX:± 0.01
.XXX:± 0.005
ANGLES:± 1°
FRACTIONS ± 1/8

| | | | |
|---|---|---|---|
| Date: | 02/04/04 | UNIT: | INCH |
| Drawn: | Rita Sue | Scale: | |
| Checked: | | PROJECT | |
| Approved: | | | |

MIDLAND METAL MFG. CO.
KANSAS CITY,MO

| | |
|---|---|
| Material: | CA360 BRASS |
| Part Title: | MJIC * MNPT STRAIGHT CONNECTOR |
| DWG. NO. | |