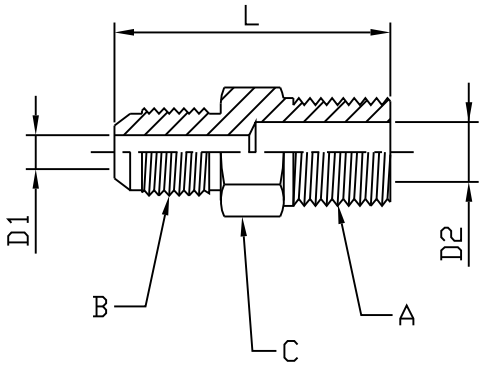

PART NUMBER	TUBE OD	A NPTF	B UN/UNF-2A	L	C	D1	D2	Working Pressure
28701	1/4	1/8-27	7/16-20	1.22	0.44	0.17	0.19	3250 psi
28702	1/4	1/4-18	7/16-20	1.38	0.56	0.17	0.30	3250 psi
28703	1/4	3/8-18	7/16-20	1.38	0.69	0.17	0.41	3250 psi
28704	5/16	1/8-27	1/2-20	1.22	0.56	0.23	0.19	3250 psi
28705	5/16	1/4-18	1/2-20	1.36	0.56	0.23	0.30	3250 psi
28706	3/8	1/8-27	9/16-18	1.19	0.63	0.28	0.28	3250 psi
28707	3/8	1/4-18	9/16-18	1.39	0.63	0.29	0.29	3250 psi
28708	3/8	3/8-18	9/16-18	1.38	0.75	0.30	0.41	3250 psi
28709	3/8	1/2-14	9/16-18	1.58	0.88	0.30	0.53	3250 psi
28710	1/2	1/4-18	3/4-16	1.50	0.81	0.39	0.28	3250 psi
28711	1/2	3/8-18	3/4-16	1.53	0.81	0.39	0.41	3250 psi
28712	1/2	1/2-14	3/4-16	1.72	0.88	0.39	0.53	3250 psi
28713	1/2	3/4-14	3/4-16	1.73	1.13	0.39	0.72	2600 psi
28714	5/8	3/8-18	7/8-14	1.63	0.94	0.48	0.40	3250 psi
28715	5/8	1/2-14	7/8-14	1.89	0.94	0.48	0.53	3250 psi
28716	5/8	3/4-14	7/8-14	1.92	1.13	0.48	0.72	2600 psi
28717	3/4	3/4-14	1-1/16-12	2.04	1.13	0.61	0.72	2600 psi
28718	3/4	1-11-1/2	1-1/16-12	2.21	1.38	0.61	0.94	1950 psi

ASTM: B-16

TEMP RANGE: -65° - 250° F

"This drawing contains proprietary and confidential information of Midland Metal Mfg., Co. and shall not be reproduced, copied, loaned, or submitted to outside parties for examination without our consent"

NO.	PCA	Date	Revision
4			
3			
2			B (02/04/04) MIDLAND
1			A (10/21/03)

TOLERANCES ARE:
DECIMALS.
.X:± 0.03
.XX:± 0.01
.XXX:± 0.005
ANGLES:± 1°
FRACTIONS ± 1/8

Date:	02/04/04	UNIT:	INCH
Drawn:	Rita Sue	Scale:	
Checked:		PROJECT	
Approved:			

MIDLAND METAL MFG. CO.
KANSAS CITY,MO

Material:	CA360 BRASS
Part Title:	MJIC * MNPT STRAIGHT CONNECTOR
DWG. NO.	