SUBMITTAL DATA SHEET

NL Ball Style Curb Stop – 76102WQ

Q CTS Compression x FNPT

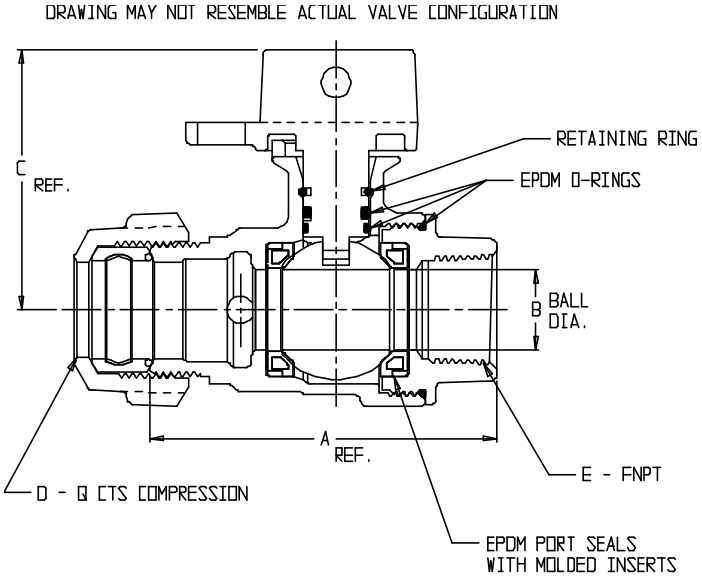

MODEL	SIZE	A	B	C	D	E
76102WQ	3/4 X 5/8 X 3/4	2.95	.63	2.31	3/4	3/4
76102WQ	1 X 5/8 X 3/4	3.82	.63	2.31	1	3/4
76102WQ	3/4x5/8x3/4x3.31	3.31	.63	2.31	3/4	3/4
76102WQ	3/4	3.24	.75	2.42	3/4	3/4
76102WQ	3/4 X 3/4 X 1	3.43	.75	2.42	3/4	1
76102WQ	1 X 3/4 X 3/4	3.22	.75	2.42	1	3/4
76102WQ	1 X 3/4 X 1	3.38	.75	2.42	1	1
76102WQ	1	3.76	1.00	2.64	1	1
76102WQ	1 X 4.50	4.51	1.00	2.64	1	1
76102WQ	1 1/4 X 1 X 1	4.06	1.00	2.64	1 1/4	1
76102WQ	1 1/4 X 1 X 1 1/4	4.32	1.00	2.64	1 1/4	1 1/4
76102WQ	1 1/4	4.94	1.25	2.94	1 1/4	1 1/4
76102WQ	1 1/2	5.47	1.50	3.40	1 1/2	1 1/2
76102WQ	2	5.80	2.00	3.71	2	2

SUBMITTAL INFORMATION

- Manufactured in compliance with ANSI/AWWA C800 (latest revision)
- Brass components in contact with potable water conform to ASTM B584, UNS C89833 (latest revision) and identified with "NL"
- Certified to NSF/ANSI 61 and NSF/ANSI 372
- Brass components not in contact with potable water conform to ASTM B62 and ASTM B584, UNS C83600 -85-5-5-5 (latest revision)
- PTFE coated brass ball
- Valve rated for 300 PSIG water pressure, end connections not to exceed rated pipe pressures.
- Blow out proof EPDM port seals
- End piece joint sealed with an EPDM o-ring and thread locker
- Insert stiffeners required on all flexible plastic connections

A.Y. McDonald Mfg. Co.
4800 Chavenelle Rd
Dubuque, IA 52002

Toll Free: 1-800-292-2737
sales@aymcdonald.com
aymcdonald.com

A.Y. McDonald considers the information on this assembly drawing correct when published. Item and option availability, including specifications, are subject to change without notice.

Submitted by: