Reach®

One-piece compact elongated 1.28 gpf toilet

K-78080-RA

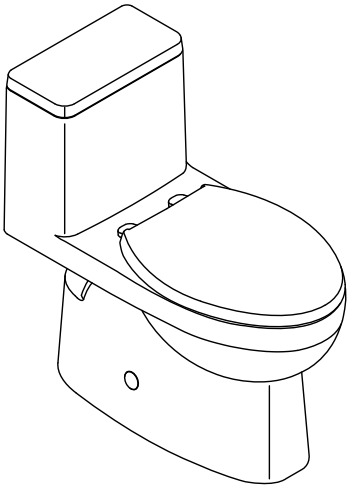

Features

- One-piece toilets integrate the tank and bowl into a seamless, easy-to-clean design.
- Elongated bowl offers added room and comfort.
- Skirted trapway simplifies cleaning.
- Comfort Height® feature offers chair-height seating that makes sitting down and standing up easier for most adults.
- 1.28 gpf (4.8 lpf).
- 2-1/8" (54 mm) fully glazed trapway.
- Patented ReadyLock™ installation system, a simple solution for skirted toilets, saves time, hassle, and eliminates the need to drill into the floor for standard 12" (305 mm) rough-in.

Technology

- Single-flush gravity uses the force of gravity and a precision-engineered tank, bowl, and trapway to create a strong siphon during flushing.
- AquaPiston® canister allows water to flow out of the tank from all sides (360°), increasing the power and effectiveness of the flush.
- Flush valve's 3:2 ratio harnesses the natural force of gravity and optimizes flush performance.
- Durable canister design has 90% less exposed seal material than a 3" flapper for leak-free performance.
- Light-touch canister flush requires a lower actuation force than a flapper.

Installation

- Standard 12" (305 mm) rough-in.
- 10" and 14" (254 mm and 356 mm) rough-in kits also available.
- Supply line sold separately.

Recommended Products/Accessories

K-21710-R right-hand trip lever
K-5381 14" Rough-in Full Skirt Trap and Attachment System
K-5383 10" Rough-in Full Skirt Trap and Attachment System

Included Components

Additional Components:

4008
Right-hand Polished Chrome trip lever

ADA | **CSA B651** | **OBC**

Codes/Standards

ASME A112.19.2/CSA B45.1
DOE - Energy Policy Act 1992
EPA WaterSense®
California Energy Commission (CEC)
ADA
ICC/ANSI A117.1
CSA B651
OBC

KOHLER® Toilets and Seats Limited Warranty

See website for detailed warranty information.

Available Colors/Finishes

Color tiles intended for reference only.

Color	Code	Description
	0	White
	96	Biscuit

Reach®

One-piece compact elongated 1.28 gpf toilet

K-78080-RA

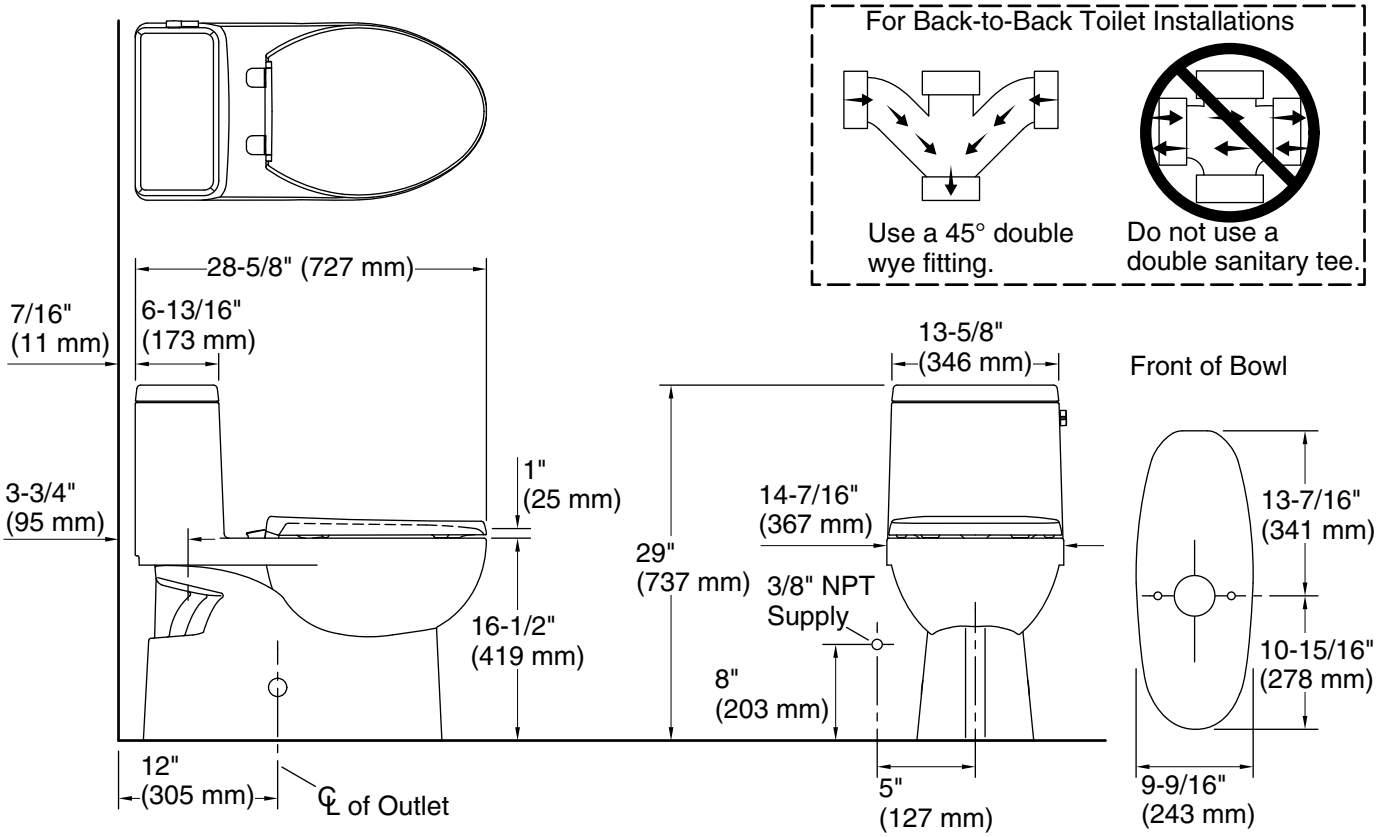

Technical Information

All product dimensions are nominal.

Toilet type:	One-piece, Floor-mount
Waste Outlet:	Floor
Bowl shape:	Elongated
Flush type:	AquaPiston®
Trap passageway:	2-1/8" (54 mm)
Water Consumption Full:	1.28 gpf (4.8 lpf)
Water surface size:	9-1/8" x 8-1/2" (232 mm x 216 mm)
Rim to water surface:	6-3/8" (162 mm)
Rough-in:	12" (305 mm)

Fixture Supply Requirements

Min static pressure:	20 psi (137.9 kPa)
Max static pressure:	80 psi (551.6 kPa)
Min flowing pressure:	25 psi (172.4 kPa)
Min flow rate:	0.43 gpm (1.6 lpm)

Notes

Install this product according to the installation instructions.

For back-to-back toilet installations: Use only a 45° double wye fitting.

ADA, OBC, CSA B651 compliant when installed to the specific requirements of these regulations.

Plumbing codes may require elongated toilets and elongated, open-front seats in public bathrooms.

Accessibility standards may require controls to be located on the open side of the toilet.