Darfield™

0.5 – 1.0 gpf Urinal

K-5024-T

Features

- Washout urinal.
- 3/4" (19 mm) top spud.
- 0.5 or 1.0 gpf (1.9 or 3.8 lpf).

Material

- Vitreous china.

Recommended Products/Accessories

K-9000 P-Trap
K-10675 Touchless washdown 0.5 gpf flushometer
K-13518 Manual 1.0 GPF Wshdwn Flushometer
K-13519 Manual 0.5 GPF Urinal Flushometer
K-23726 Drain treatment
K-23725 Cast iron cleaner

Included Components

Additional Components:

1-1/2" Outlet Spud
1-12" Tailpiece
3/4" inlet spud
Hanger(s)
Strainer

ADA

Codes/Standards

ASME A112.19.2/CSA B45.1
DOE - Energy Policy Act 1992
ADA
ICC/ANSI A117.1

KOHLER® One-Year Limited Warranty

See website for detailed warranty information.

Available Colors/Finishes

Color tiles intended for reference only.

Color	Code	Description
	0	White
	96	Biscuit
	7	Black Black™

Darfield™

0.5 – 1.0 gpf Urinal

K-5024-T

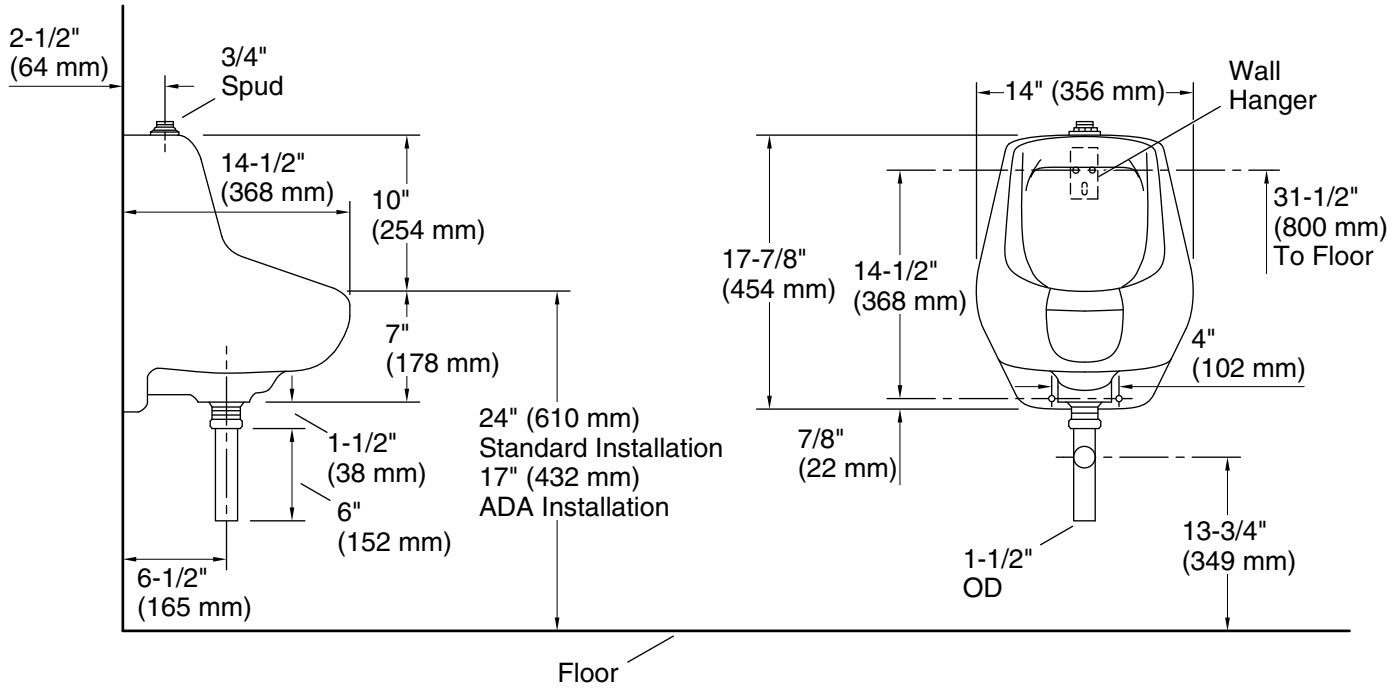

Technical Information

All product dimensions are nominal.

Flush outlet technology:	Washout
Spud size:	3/4", Inlet, Top
Min. Water per Flush:	0.5 gal (1.9 L)
Max. Water per Flush:	1 gal (3.8 L)

Designed for the above water use when installed with a water-saving flushometer.

Notes

Install this product according to the installation guide.

ADA compliant when installed to the specific requirements of these regulations.