KOHLER Faucets

# Pinstripe® Pure

Bidet Faucet

**K-13142-4A**

## Features

- Pop-up drain with lift rod and tailpiece
- Vertical spray
- Fixture-mount transfer valve/vacuum breaker
- Available with plain lever handles
- Quarter-turn washerless ceramic disc valves
- Metal construction

## Material

- Brass valve bodies

## Installation

- Flexible connections for easy installation

## Recommended Products/Accessories

K-23726 Drain treatment

## Codes/Standards

ASME A112.18.1/CSA B125.1
ASSE 1001

## KOHLER® Faucet Lifetime Limited Warranty

See website for detailed warranty information.

## Available Colors/Finishes

*Color tiles intended for reference only.*

| Color | Code | Description |
|---|---|---|
| | CP | Polished Chrome |
| | SN | Vibrant® Polished Nickel |
| | BN | Vibrant® Brushed Nickel |

KOHLER Faucets

# Pinstripe® Pure

Bidet Faucet

**K-13142-4A**

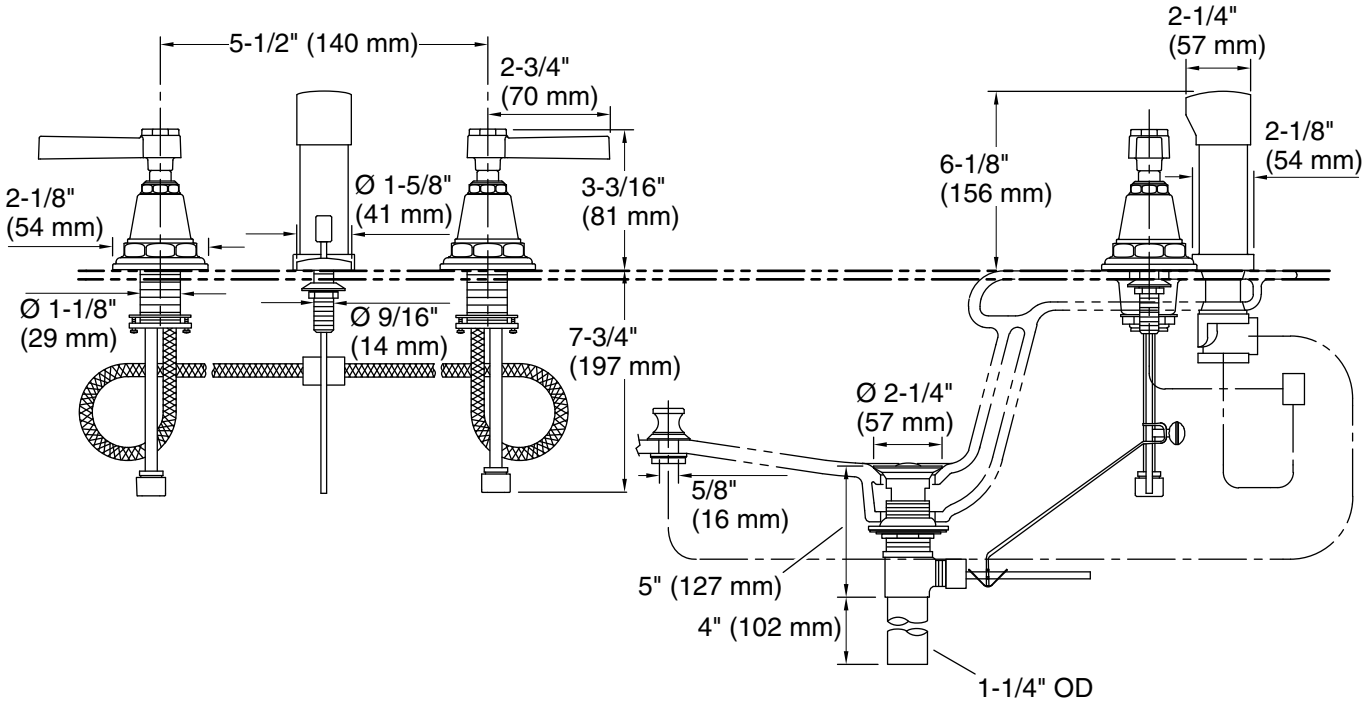


## Technical Information

All product dimensions are nominal.

Drain included: Yes

## Spout:

Handshower rated max flow: 2.2 gal/min (8.3 l/min)

## Notes

Install this product according to the installation instructions.