KOHLER. Faucets

Envelu™

Single-handle bathroom sink faucet, 1.2 gpm

K-R38799-4D

Features

- Single lever handle is simple to use and makes adjusting water temperature easy
- One-piece, self-contained ceramic disc valve allows for both volume and temperature control
- 1.2 gpm (4.5 lpm) maximum flow rate at 60 psi (4.14 bar)
- KOHLER® ceramic disc valves exceed industry longevity standards for a lifetime of durable performance
- Box includes: Assembled faucet, supply lines, escutcheon plate, clicker drain
- This product can help a building earn Water Efficiency points in LEED® Green Building Rating System

Material

- Premium material construction for durability and reliability
- Select KOHLER finishes feature ScratchShield® technology which withstands even the toughest daily use
- Spot Repel® finish resists fingerprints, smudges, and water spots (Matte Black finish only)

Installation

- For single-hole or 4" (102 mm) centers
- Simplified faucet installation; mounting hardware requires no special tools

Recommended Products/Accessories

K-23726 Drain treatment

ADA	CSA B651	OBC

Codes/Standards

ASME A112.18.1/CSA B125.1
NSF/ANSI/CAN 61
NSF/ANSI/CAN 372
DOE - Energy Policy Act 1992
EPA WaterSense®
California Energy Commission (CEC)
ADA
ICC/ANSI A117.1
CSA B651
OBC

KOHLER® Faucet Lifetime Limited Warranty

See website for detailed warranty information.

Available Colors/Finishes

Color tiles intended for reference only.

Color	Code	Description
	CP	Polished Chrome
	BN	Vibrant® Brushed Nickel
	BL	Matte Black
	2MB	Vibrant® Brushed Moderne Brass

KOHLER Faucets

Envelu™

Single-handle bathroom sink faucet, 1.2 gpm

K-R38799-4D

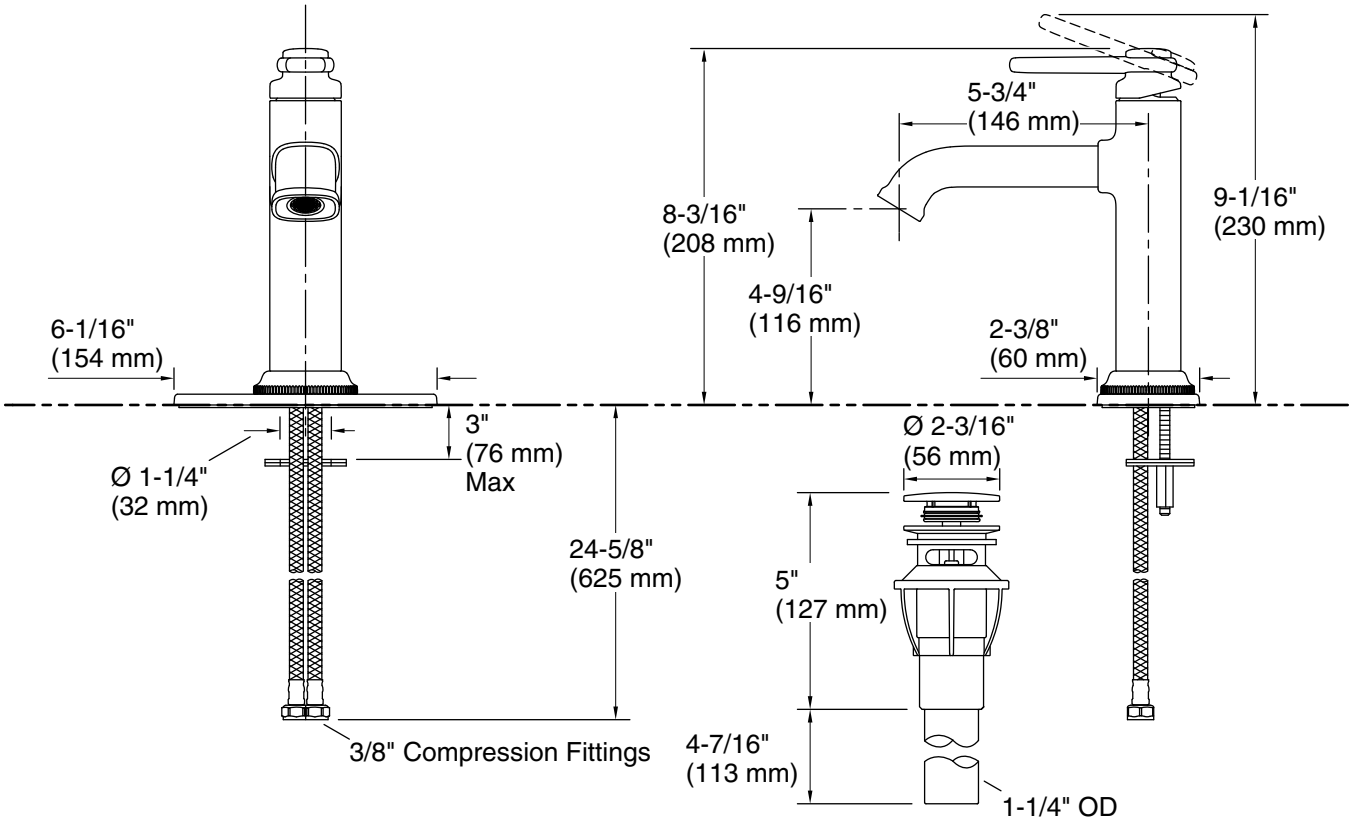

Technical Information

All product dimensions are nominal.

Faucet flow rate:	1.2 gal/min (4.5 l/min)
Drain included:	Yes
Drain with overflow:	Yes
Drain tailpiece included:	Yes

Spout:

Spout reach:	6-1/4" (159 mm)

Notes

Install this product according to the installation guide.

ADA, OBC, CSA B651 compliant when installed to the specific requirements of these regulations.