KOHLER. Faucets

Ackley™

Pull-down kitchen sink faucet with two-function sprayhead

K-R38617

Features

- Single lever handle is simple to use and makes adjusting water temperature easy
- Two-function pull-down sprayhead allows you to switch from aerated stream to Sweep® spray
- Sweep® spray features specially angled nozzles that form a wide, powerful blade of water to sweep your dishes and sink clean
- High-arch spout offers vertical clearance for tall cookware and pitchers
- 1.5 gpm (5.7 lpm) maximum flow rate at 60 psi (4.14 bar)
- ProMotion® technology's light, quiet braided hose and swiveling ball joint make the pull-down sprayhead easier and more comfortable to use
- MasterClean™ sprayface features an easy-to-clean surface that withstands mineral buildup and maximizes spray performance
- DockNetik® secure docking system locks sprayhead into place when not in use
- KOHLER® ceramic disc valves exceed industry longevity standards for a lifetime of durable performance
- Box includes: Assembled faucet, supply lines, and escutcheon plate

Material

- Premium material construction for durability and reliability
- Select KOHLER finishes feature ScratchShield® technology which withstands even the toughest daily use

Installation

- Single-hole installation (three-hole escutcheon plate included)
- Flexible supply lines and quick-connect fittings simplify installation
- Longer shank works with countertops up to 2-1/2" (63.5 mm) thick and is easy to install

ADA | **CSA B651**

Codes/Standards

ASME A112.18.1/CSA B125.1
NSF/ANSI/CAN 61
NSF/ANSI/CAN 372
DOE - Energy Policy Act 1992
California Energy Commission (CEC)
ADA
ICC/ANSI A117.1
CSA B651

KOHLER® Faucet Lifetime Limited Warranty

See website for detailed warranty information.

Available Colors/Finishes

Color tiles intended for reference only.

Color	Code	Description
	CP	Polished Chrome
	BL	Matte Black
	LVS	Lacquer Vibrant Stainless
	LVS	Lacquer Vibrant Stainless

KOHLER Faucets

Ackley™

Pull-down kitchen sink faucet with two-function sprayhead

K-R38617

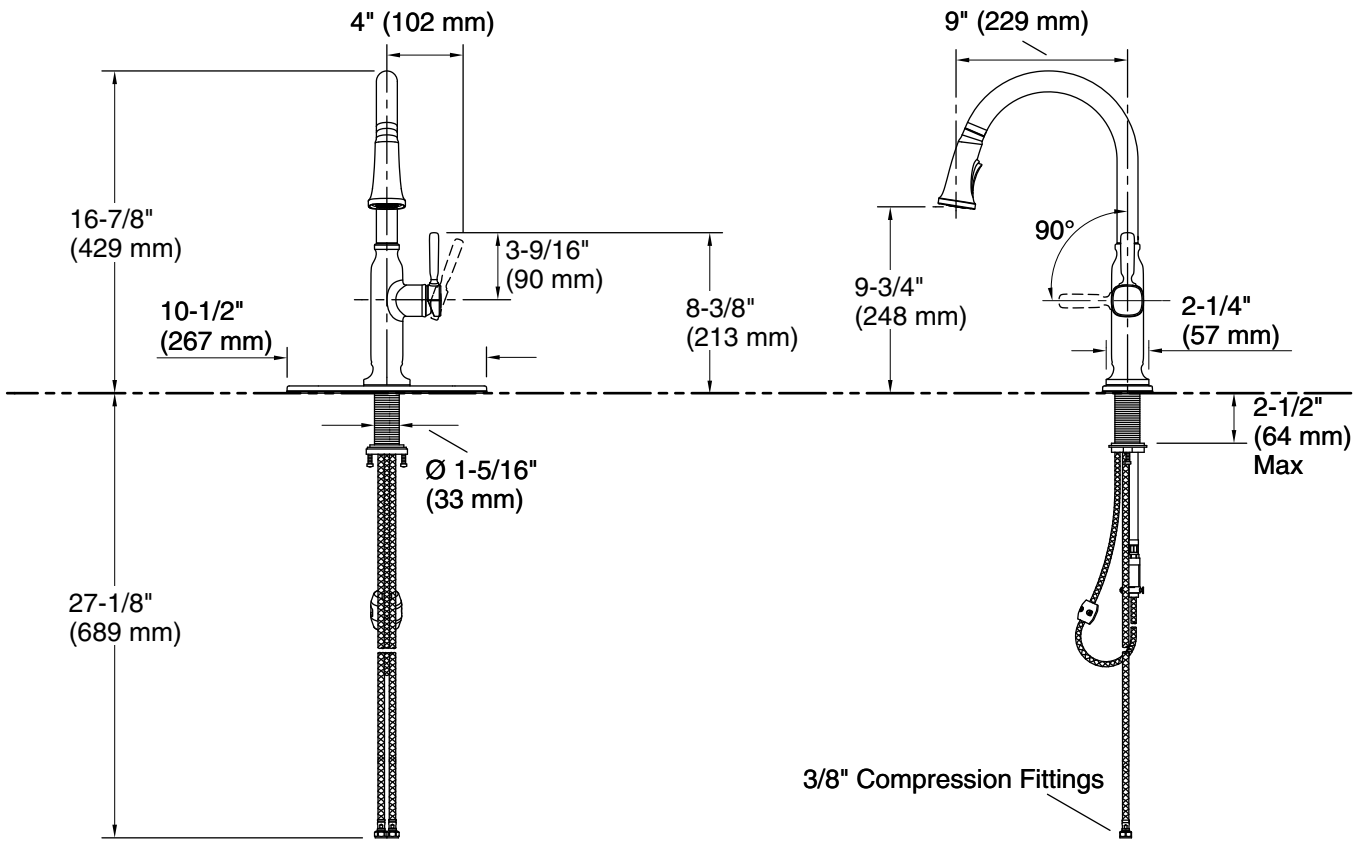

Technical Information

All product dimensions are nominal.

Faucet flow rate: 1.5 gal/min (5.7 l/min)

Spout:

Spout reach: 9" (229 mm)

Notes

Install this product according to the installation guide.

ADA, CSA B651 compliant when installed to the specific requirements of these regulations.