Memoirs®

Four-light sconce

K-23689-BA04

Features

- A perfect complement to our Memoirs suite of products.
- Frosted glass shades that perfectly diffuse the light, reducing glare in the bathroom.
- Medium base (E26) socket, works best with type G light bulbs (sold separately).
- Suitable for damp locations, per UL 1598.

Material

- Manufactured with quality materials and complemented with a meticulous finishing process.
- Durable finishes engineered to last and designed to coordinate with KOHLER faucet finishes.

Recommended Products/Accessories

K-23723 Faucet cleaner

Included Components

Additional Components:

Installation hardware

Codes/Standards

UL 1598

CSA C22.2 No. 250

KOHLER® Lighting Limited Warranty

See website for detailed warranty information.

Available Colors/Finishes

Color tiles intended for reference only.

Color	Code	Description
	SNL	Polished Nickel
	BGL	Moderne Brushed Gold
	BNL	Brushed Nickel
	BZL	Oil-Rubbed Bronze
	CPL	Polished Chrome

Memoirs®

Four-light sconce

K-23689-BA04

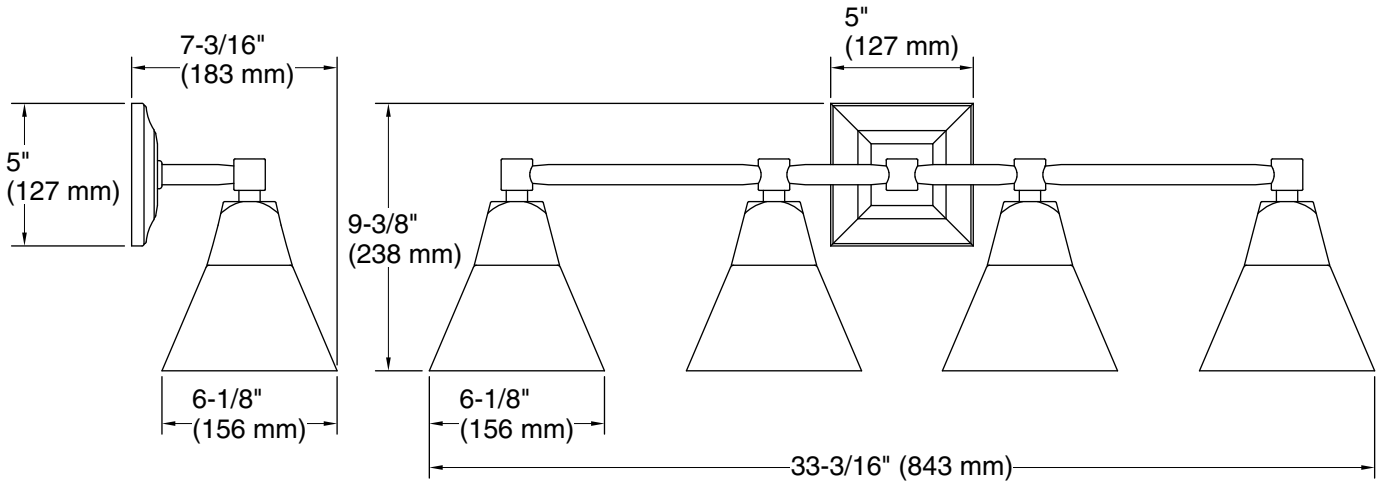

Required Electrical Service

One circuit required.

Lights:	120 V, 60 Hz

Technical Information

All product dimensions are nominal.

Installation Type:	Wall-mount
Material:	Brass
Number of Lights:	4
Lighting Type:	Socket-based
Socket Type:	E-26 Medium
Number of Shades:	4
Shade Type:	Glass - frosted
Electrical component rating:	Socket Rating: 60 Hz, 60 W, 3200 Lumens, 3000K