PLENUMLINE™

FR-PVDF MECHANICAL JOINT ACID WASTE SYSTEM

Submittal Data Sheet

Job or Customer: .....

Engineer: .....

Contractor: .....

Submitted by: ..... Date

Approved by: ..... Date

Order No: ..... Date

Specification: .....

Installed Date: .....

ASTM F1673
ASTM D3222
ASTM E84

B 181.3

UL 723

CSA B181.3

LISTED
CAN/ULC-S102.2
FS-10, SD-10

Full Listing

IPEX's Plenumline™ mechanical-joint system is the preferred solution for virtually all chemical waste return air plenum applications. Pipe and fittings are made from flame retardant Polyvinylidene Fluoride. Plenumline™ PIPE and fittings comply with ASTM F1673 Standard specification for PolyvinylideneFluoride (PVDF) Corrosive Waste Drainage Systems. Material used in the manufacturing of Plenumline™ pipe and fittings complies with the material requirements of ASTM D3222 Standard Specification for Unmodified Polyvinylidene Fluoride (PVDF) Molding Extrusion and Coating materials. All pipe and fittings are listed NSF to CSA B181.3 and are IAPMO fully listed. Plenumline™ pipe and fittings have a flame spread index (FSI) of 5 and a smoke development (SDI) of 35 as tested in accordance with ASTM E84 (UL 723) and the material is UL listed.

ADDITIONAL CORROSIVE WASTE PRODUCTS

FLOWAY™
NEUTRATANK®
NEUTRASYSTEM2™
LABLINE®
ENFIELD™
Encase™

pipe and fitting availability

1 1/2" – 6" Pipe PVDF	1 1/2" – 4" 45 DEG Wye and Reducing Wyes PVDF
1 1/2" – 4" Couplings and Reducer Couplings PVDF	1 1/2" – 4" Cleanout Tees PVDF
1 1/2" – 4" 1/4 Bend PVDF	1 1/2" – 2" Running Traps PVDF
1 1/2" – 4" 1/8 Bend PVDF	1 1/2" – 4" Caps PVDF
1 1/2" – 4" Tees and Reducing Tees PVDF	1 1/2" – 4" Flanges PVDF
1 1/2" – 4" Cleanout Plug PVDF	1 1/2" – 4" 'P' Trap PVDF
1 1/2" – 4" L/N 1/8 Bend PVDF	1 1/2" – 2" Male Adaptor PVDF
1 1/2" – 4" L/N 1/4 Bend PVDF	1 1/2" – 2" Female Adaptor FR-PVDF
1 1/2" – 4" Combo Wyes & Reducing Combo Wyes PVDF	

ipexna.com
Toll Free: 866 473-9462

IPEX by aliaxis

DAINPLJP041116C

Installation Procedures

Points to Remember

a. NEW BLUE ELASTOLIVE DOES NOT REQUIRE PRE-HEATING.
(If heated, maximum temperature should not exceed 175°F.)

b. The pipe end should be clean and there should be no deep longitudinal grooves in it.

c. It is desirable to use a chain vise to hold 3" and 4" pipe firmly during cutting and grooving operations. When grooving 3" and 4" pipe, a strap wrench should be used to hold the pipe, to prevent its rotation, while the groove is being cut.

d. After grooving, the pipe should be kept clean so that foreign material is not introduced into the groove.

e. The cutting blade should always be fully retracted whenever the tool is put on or taken off the pipe. If any resistance is felt when putting the tool onto the pipe or taking it off, the blade position should be checked.

f. Each nut must be fully tightened as the installation progresses. Do not assemble the system loosely and tighten nuts last, as layout length errors will go undiscovered until such time as the nuts are finally tightened. Avoid misalignment.

g. Ensure the grooving tool has a sharp blade to make a clean-shouldered groove.

Procedure:

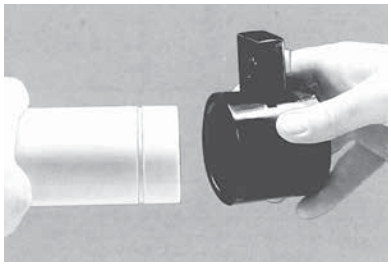

1. Each fitting is supplied with the correct number of blue elastolive® (sealing rings) and nuts.

2. Verify the grooving tool is sharp. Cut the pipe to the desired length using a tubing cutter fitted with a wheel designed for plastic pipe. A handsaw and miter box may also be used. Ensure pipe ends are square and trimmed free of burrs.

3. Examine the grooving tool to ensure that the cutting blade is fully retracted. Insert the pipe into the grooving tool.

GROOVING TOOL BLADE POSITIONING

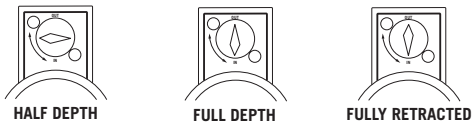

4. Set the grooving blade at the half-depth position and rotate the tool in a counter-clockwise direction. After one complete turn, set the blade at the full-depth position and again rotate the tool one full turn counter-clockwise. Fully retract the blade and remove the tool from the pipe. A shallow groove has now been formed around the pipe.

   Any material left as a feather edge in the groove should be removed. Care should be taken not to damage the square edge (shoulder) of the groove, particularly at the edge near the spigot end of the pipe as this is the primary sealing surface.

   Feathered or rounded edges may indicate a worn tool and may result in possible leakage. Make sure the groove shoulders are sharp.

Installation Procedures

1 1/2" & 2" Labline Joint Details

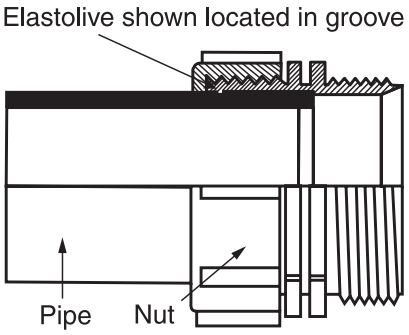

Once engaged in the groove, the elastolive virtually becomes part of the pipe and when the nut is tightened, the pipe is locked into the fitting.

3" & 4" Labline Joint Details

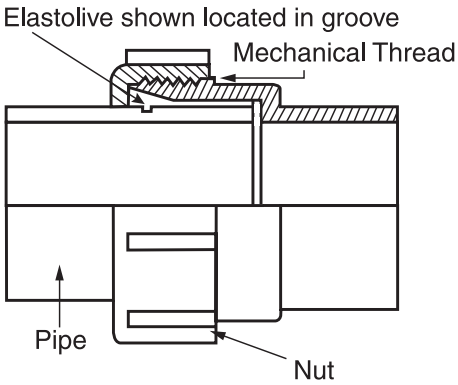

The 3" and 4" joint design differ from smaller versions in that the sealing ridges are located on the fitting and the elastolive extends to the end of the pipe.

5. Place the nut onto the pipe with the threaded side to the spigot end of the pipe. Take the blue elastolive, stretch it and pull it over the pipe with the thick edge first and the taper pointing to the spigot end of the pipe. Slide down the pipe and onto the groove. Once on the groove "work it" a bit to make sure that the rib on the underside of the elastolive engages the full circumference of the groove.

Installation Procedures

6. Apply a non-hydrocarbon based lubricant to both the thread and the elastolive, then push the pipe squarely into the fitting. The lubrication permits easy threading of the nuts and also allows the elastolive to glide smoothly into position against the fitting sealing area.

   Hand-tighten the nut, then tighten, 1/4 to 1/2 turn using a spanner wrench.

7. The joint is now ready for testing.

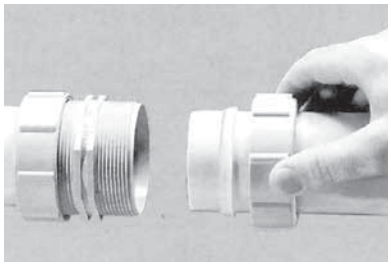

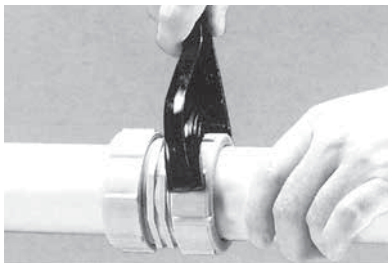

Hydrostatic Testing Procedures

WARNING

Use of compressed air or gas in PVC/CPVC/PP/PVDF pipe and fittings can result in explosive failures and cause severe injury or death.

- NEVER use compressed air or gas in Enfield or Labline pipes, fittings, or accessories.
- NEVER test Enfield or Labline systems with compressed air or gas, or air-over-water boosters.
- ONLY use Enfield or Labline systems for water and approved chemicals.

Site Pressure Testing

The purpose of an onsite pressure test is to establish that the installed section of line, and in particular all joints and fittings, will withstand the design working pressure, plus a safety margin, without loss of pressure or fluid.

Hydrostatically test the system in accordance with the local plumbing code or authority having jurisdiction, or with a maximum of 10 ft of head pressure.

After making the first 20 or 30 joints, it is recommended that a test be applied to prove the joint-making technique is sound. If a leak is detected, follow the appropriate procedure below. Hydrostatic testing of the joints can be performed immediately after the final joint has been completed. The low-pressure testing procedure detailed below should be strictly followed 10. If joints are found to be leaking, tighten the nut 1/8 to 1/4 turn, and wipe the fitting to remove excess water. the system must be fully drained and the joints repaired. Dry, or marginal Enfield joints can be simply re-fused by following steps 5 through 14 in the Standard Enfield Electrofusion Installation procedure.

Hydrostatic Test Procedure

1. Fully inspect the installed piping for evidence of mechanical abuse and suspect joints.
2. Split the system into convenient test sections, not exceeding 1,000 feet. The piping should be capped off with an expandable plug at the end of the pipe section to be tested.
3. Prior to test in below grade applications, straight lengths of pipe should be backfilled between fittings that are tested.
4. Slowly fill the pipe section with water, taking care to evaluate all trapped air in the process. Use air release valves in any high spots in the system. Do not pressurize at this stage.

Hydrostatic Testing Procedures

5. Leave the pipe for at least one hour to allow an equilibrium temperature to be achieved.

6. Visually check the system for leaks.

7. Pressurize the system, (maximum of 10 feet of head) using a 10' vertical riser, or a low-pressure hand pump.

8. Leave the line at 10 ft of head for a period of 2 hours, during which time the water level should not change (standing water test), nor should the pressure gauge reading change (hand pump test).

9. If there is a significant drop in pressure, or extended times are required to achieve the desired pressure, either joint leakage has occurred or air is still entrapped in the line. In this event inspect for joint leaks. If none are found, check for entrapped air – these air pockets must be removed prior to continuing the test.

10. If joints are leaking, tighten the nut 1/8 to 1/4 turn and wipe the fitting to remove excess water. This should normally correct the problem. If it does not, then the grooving or setting of the elastolive should be investigated.

    Drain the system and undo the suspect fitting.

    Test first that the elastolive feels tight on the pipe by attempting to turn it with reasonable pressure such as you might use to unscrew the cap of a bottle. The elastolive should not easily move around the pipe. If it does, it should be replaced. If the elastolive is tight, examine it, particularly at the front, for signs of bad grooving or shavings between the elastolive and the groove. If the front edge of the groove is damaged, the joint must be re-made and the piece of pipe replaced.

    When examining a leaking 3" or 4" joint, pay particular attention should be paid to possible misalignment, as this is the most likely cause of such a leak. Make sure any misalignment is corrected before re-testing.

11. Repeat the 10 ft hydrostatic head test after repairing any leaking joints, following the procedure described above.

Material Properties

Physical Properties(1)	Standard/Conditions	Units	700 Series
Refractive Index	D542 / at Sodium D line 77°F		1.42
Specific Gravity	D792 / 73°F		1.77 - 1.79
Water Absorption	D570 / 20°C Immersion/24 Hours	%	0.01 - 0.03
Color			Dark Blue

Mechanical Properties(1)	Standard/Conditions	Units	700 Series
Flexural Strength @ 5% Strain	ASTM D790 / 73°F	psi	8,500 - 11,000
Flexural Modulus	ASTM D790 / 73°F	psi	240,000 - 335,000
Tensile Yield Elongation	ASTM D638 / 73°F	%	5 - 10
Tensile Yield Strength	ASTM D638 / 73°F	psi	6,000 - 8,000
Tensile Break Elongation	ASTM D638 / 73°F	%	50 - 200
Tensile Break Strength	ASTM D638 / 73°F	psi	5,000 - 7,000
Tensile Modulus	ASTM D638 / 73°F	psi	200,000 - 335,000
Compressive Strength	ASTM D695 / 73°F	psi	10,000 - 15,000
Deflection Temperature	ASTM D648 / at 264 psi	°F	221 - 239
Deflection Temperature	ASTM D648 / at 66 psi	°F	257 - 284
Impact Strength Notched Izod	ASTM D256 / 73°F	Ft-Lb/In	2 - 4
Impact Strength Unnotched Izod	ASTM D256 / 73°F	Ft-Lb/In	20 - 80
Hardness	ASTM D2240 / 73°F	Shore D	76 - 80

Thermal Properties(1)	Standard/Conditions	Units	700 Series
Melting Temperature	ASTM D3418	°F	329 - 338
Coefficient of Linear Thermal Expansion	ASTM D696	$10E^{-5\,°F}$	6.6 - 8.0
Thermal Conductivity	ASTM D433	BTU - in/hr.ft^2.°F	1.18 - 1.32
Specific Heat	DSC	BTU/Lb.°F	0.28 - 0.36
Thermal Decomposition TGA	1% wt. loss / in air	°F	707

Electrical Properties(1)	Standard/Conditions	Units	700 Series
Dielectric Strength 73°F	D149 / 73°F	KV/Mil	1.7
Dissipation Factor 73°C	D150 / 100 Hz		0.10 - 0.16
Volume Resistivity	D257 / DC 68°F/ 65% R.H.	ohm-cm	2×10^{14}

Flame & Smoke Properties(1)	Standard/Conditions	Units	700 Series
Burning Rate	UL / Bulletin 94		V - 0
Limiting Oxygen Index (LOI)	D2868	% O2	60
Flame Spread Index	UL 723 per ASTM E84		5
Smoke Development Index	UL 723 per ASTM E84		35

About IPEX

About the IPEX Group of Companies

As leading suppliers of thermoplastic piping systems, the IPEX Group of Companies provides our customers with some of the world's largest and most comprehensive product lines. All IPEX products are backed by more than 50 years of experience. With state-of-the-art manufacturing facilities and distribution centers across North America, we have established a reputation for product innovation, quality, end-user focus and performance.

Markets served by IPEX group products are:

- Electrical systems
- Telecommunications and utility piping systems
- Industrial process piping systems
- Municipal pressure and gravity piping systems
- Plumbing and mechanical piping systems
- Electrofusion systems for gas and water
- Industrial, plumbing and electrical cements
- Irrigation systems
- PVC, CPVC, PP, PVDF, PE, ABS, and PEX pipe and fittings

Products manufactured by IPEX Inc.
Encase™, Enfield™, Floway™, Labline®, Neutrasystem2™, Neutratank®, and Plenumline™ are trademarks of IPEX Inc.

This literature is published in good faith and is believed to be reliable. However, it does not represent and/or warrant in any manner the information and suggestions contained in this brochure. Data presented is the result of laboratory tests and field experience.

A policy of ongoing product improvement is maintained. This may result in modifications of features and/or specifications without notice.

ipexna.com
Toll Free: 866 473-9462

IPEX by aliaxis