VOLUME III: ACID WASTE PIPING SYSTEMS

Industrial Technical Manual Series

THIRTEENTH EDITION

IPEX ACID WASTE PIPING SYSTEMS

Enfield™ Electrofusion Acid Waste System
Labline® Mechanical Joint Acid Waste System
Plenumline™ Mechanical Joint Acid Waste System
Floway™ Acid Resistant Floor Drains
Neutratank® Neutralization Tanks
Neutrasystem 2™ pH Monitoring, Recording, and Alarm System

IPEX by aliaxis

IPEX Acid Waste Piping Systems

Industrial Technical Manual Series

Vol. III, 13th Edition

© 2023 by IPEX. All rights reserved. No part of this book may be used or reproduced in any manner whatsoever without prior written permission.

The information contained here within is based on current information and product design at the time of publication and is subject to change without notification. IPEX does not guarantee or warranty the accuracy, suitability for particular applications, or results to be obtained therefrom.

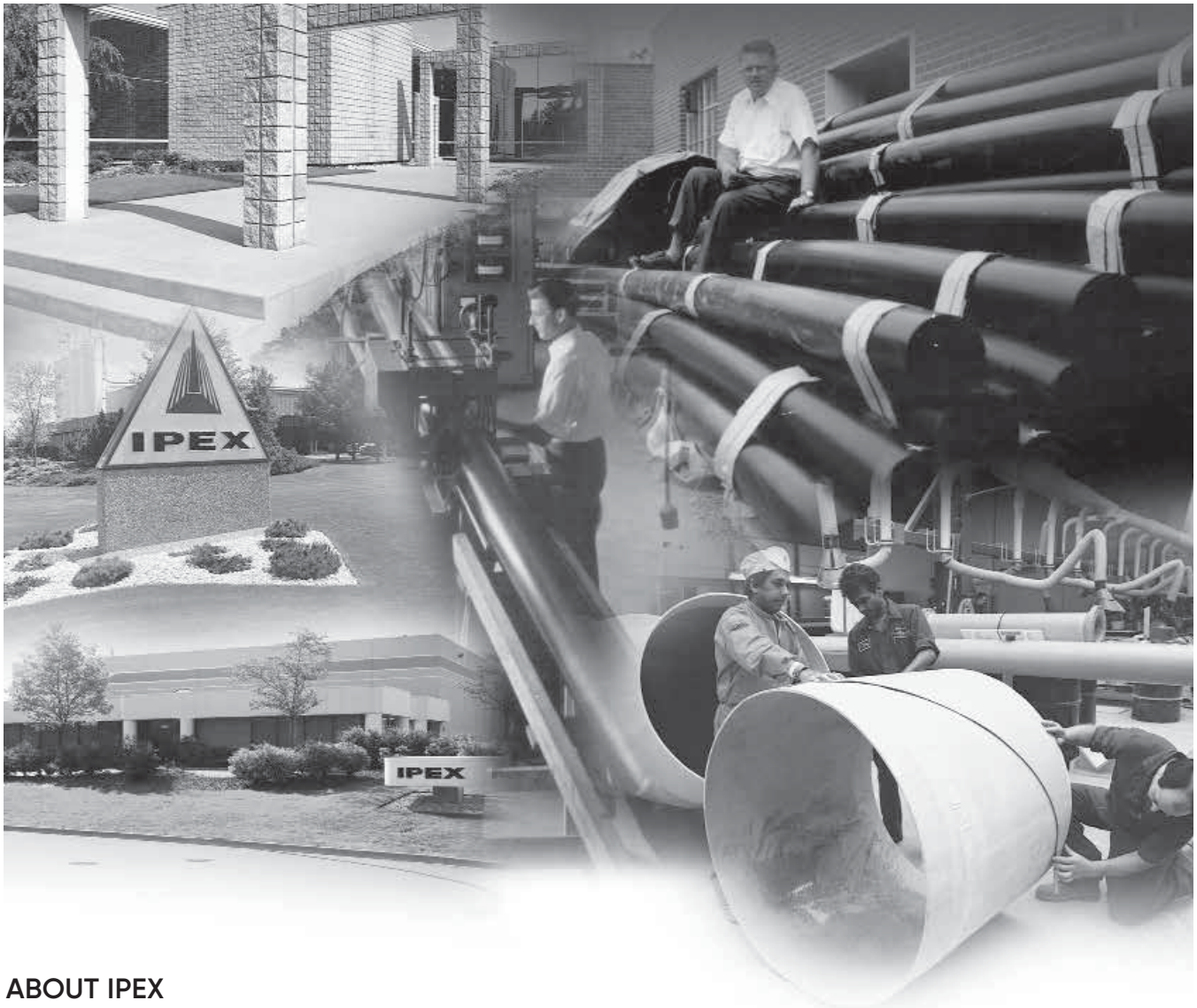

ABOUT IPEX

At IPEX, we have been manufacturing non-metallic pipe and fittings since 1951. We formulate our own compounds and maintain strict quality control during production. Our products are made available for customers thanks to a network of regional stocking locations throughout North America. We offer a wide variety of systems including complete lines of piping, fittings, valves and custom-fabricated items.

More importantly, we are committed to meeting our customers' needs. As a leader in the plastic piping industry, IPEX continually develops new products, modernizes manufacturing facilities and acquires innovative process technology. In addition, our staff take pride in their work, making available to customers their extensive thermoplastic knowledge and field experience. IPEX personnel are committed to improving the safety, reliability and performance of thermoplastic materials. We are involved in several standards committees and are members of and/or comply with the organizations listed on this page.

For specific details about any IPEX product, contact our customer service department.

SAFETY ALERTS

Engineered thermoplastics are safe inert materials that do not pose any significant safety or environmental hazards during handling or installation. However, improper installation or use can result in personal injury and/or property damage. It is important to be aware of and to recognize safety alert messages as they appear in this manual.

The types of safety alert messages are described below.

This safety alert symbol indicates important safety messages in this manual. When you see this symbol be alert to the possibility of personal injury and carefully read and fully understand the message that follows.

WARNING

"WARNING" identifies hazards or unsafe practices which can result in severe personal injury or death if instructions, including recommended precautions, are not followed.

CAUTION

"CAUTION" identifies hazards or unsafe practices which can result in minor injury or product or property damage if instructions, including recommended precautions, are not followed.

Note: The use of the word "NOTE" signifies special instructions which are important but not related to hazards.

For the materials described in this manual in acid waste applications, the following warning applies.

WARNING

Use of compressed air or gas in PP or PVDF pipe and fittings can result in explosive failures and cause severe injury or death.

- NEVER use compressed air or gas in Enfield, Labline, or Plenumline pipes, fittings, or accessories.
- NEVER test Enfield, Labline, or Plenumline systems with compressed air or gas, or air-over-water boosters.
- ONLY use Enfield, Labline, or Plenumline systems for approved chemicals.

NOTES

CONTENTS

Acid Waste Piping Systems Manual

About IPEX

Safety Alerts . . . . . *i*

Section One: General Information

Overview 1

IPEX Acid Waste Systems 2

Benefits 4

Material Description 7

Section Two: Dimensions

Pipe Dimensions 9

Enfield Fitting Dimensions 10

Labline and Plenumline Fitting Dimensions 22

Accessories 31

Floway Polypropylene Drain Dimensions 33

Floway Adjustable Acid Waste Cleanout w/ Nickel-Bronze Cover 37

Standard Bolt Pattern and Dimensions 38

Section Three: Design Considerations

Expansion and Contraction 39

System Sizing 43

Thermal Conductivity 43

Pipe Supports and Support Spacing 44

Pipe Clips and Hangers 46

Handling and Storage 49

Below Ground Installation 50

Section Four: Installation

Introduction 51

Enfusion Hand Held Control Unit 51

Multiple Joint Fusion 55

Cold Weather Fusion 56

Fault Code Analysis 57

Enfield Testing 59

Enfield Pipe Repair 60

Labline and Plenumline Joints 61

Labline and Plenumline Testing 63

Section Five: Additional Engineering Considerations

Return Air Plenum Guidelines 65
Return Air Plenum Options 66
Adapting to Other Drainline Materials 67
Typical Underbench Configurations 68

Section Six: Dilution and Neutralization

Dilution Traps 71
Neutralization 72
Cylindrical Tanks 73
Rectangular Tanks 75
Options and Accessories 77
Neutratank Extensions 78
Solids Interception 80

Neutrasystem 2 81
Neutralization Tank Sizing and Maintenance 83
Neutralization Tank Installation 85

Section Seven: Acid Waste System Specifications

Enfield Specifications 87
Labline Specifications 88
Plenumline Specifications 89
Neutratank Neutralization Tank Specifications 90
Monitoring System Specifications 90
Encase Double Containment Acid Waste Systems 91

Appendix: Conversion Charts 93

SECTION ONE: GENERAL INFORMATION

OVERVIEW

For more than 30 years, IPEX has provided laboratories throughout North America with complete acid waste systems designed to handle a variety of chemicals. Our **Enfield**™ electrofusion and **Labline**® mechanical-joint systems rank among the most widely specified systems on the continent. Constructed from flame-retardant polypropylene, these systems offer a comprehensive solution for virtually all chemical waste situations. IPEX **Plenumline**™ is a robust acid waste system, made from flame-retardant PVDF thermoplastic, designed for challenging conditions, including highly restrictive return air plenum applications, and high-temperature corrosive chemical waste situations. In addition, each system features advantages of its own:

- **Enfield**™ offers polypro fittings, constructed with a heavy gauge resistance wire that is integral to the socket. These are considered to be the premier fittings on the market.
- Both **Labline**® and **Plenumline**™ contain no-heat **Elastolives**™ for quick installation and high performance.

According to standards ASTM E84 and UL 723, piping installed in spaces used as return air plenums must have a flame spread index of 25 or less, and a smoke development index of 50 or less. **Plenumline**™ not only meets these requirements, but also provides designers and contractors with all the traditional benefits associated with thermoplastic systems, including high impact resistance, flexibility, low cost installations, long-term reliability, and exceptional chemical resistance.

Third-party testing reveals that Flame Retardant PVDF exhibits a flame spread index of 5 and a smoke development index of 35, making it particularly well suited to plenum applications.

Where design parameters allow, Flame Retardant PVDF **Plenumline**™ components or standard Flame Retardant PP **Enfield**™ and **Labline**® components can be easily integrated into a single comprehensive acid waste system.

Our complete range of products for acid waste includes **Neutratank**® neutralization tanks, **Neutrasystem2**™ pH monitoring equipment and **Floway**™ drains as well as **Encase**™ double containment systems (contact IPEX for more information on double containment).

This design and installation manual provides up-to-date comprehensive information about IPEX's acid waste systems. By combining laboratory test results with decades of field experience, IPEX has produced a manual suited to engineers, contractors and distributors alike. All aspects of our acid waste systems are described here — from dimensional data through to installation and testing procedures.

IPEX ACID WASTE SYSTEMS

The IPEX Solution

Changing government regulations and increasing public desire to minimize environmental pollution has necessitated changes in the way chemicals are discharged from industrial and commercial facilities.

IPEX has long been recognized for having the highest quality, most reliable and most comprehensive chemical waste systems available. Whether the problem at hand has necessitated the fast and versatile **Labline**® or **Plenumline**™ Mechanical Joint piping systems, or the microprocessor-controlled **Enfield**™ jointed system, the end result has been repeatable, trouble-free installations. From an environmental perspective, IPEX manufactures a patented, modular construction double containment piping system, (Encase™, for more information, see Double Containment Piping Systems Manual, Volume VI), that can be used above and below ground to eliminate the possibility of chemical spillage into the environment. **Neutratank**® is used for limestone neutralization of chemical waste prior to discharge into the sewer.

While this method of neutralization is very effective, there is a growing need to verify that the chemical discharge is continuously within acceptable pH levels. **Neutrasystem 2**™ meets this need by analyzing the pH of liquid flow, permanently recording the pH discharge levels (optional), and giving visual and audible alarms to warn maintenance personnel when the pH level is outside of the acceptable range.

Maintenance personnel can then address the situation usually by inserting additional limestone chips.

Enfield Fittings (1-1/2" to 12")
Enfield Fittings utilize the latest in joining technology. The NSF-listed fittings have a nickel chrome electrical resistance wire integrally in place. Joining is completed by energizing the nickel/chrome wire with a self-diagnostic, microprocessor-controlled, Enfusion control unit which fuses the pipe/fitting surfaces together.

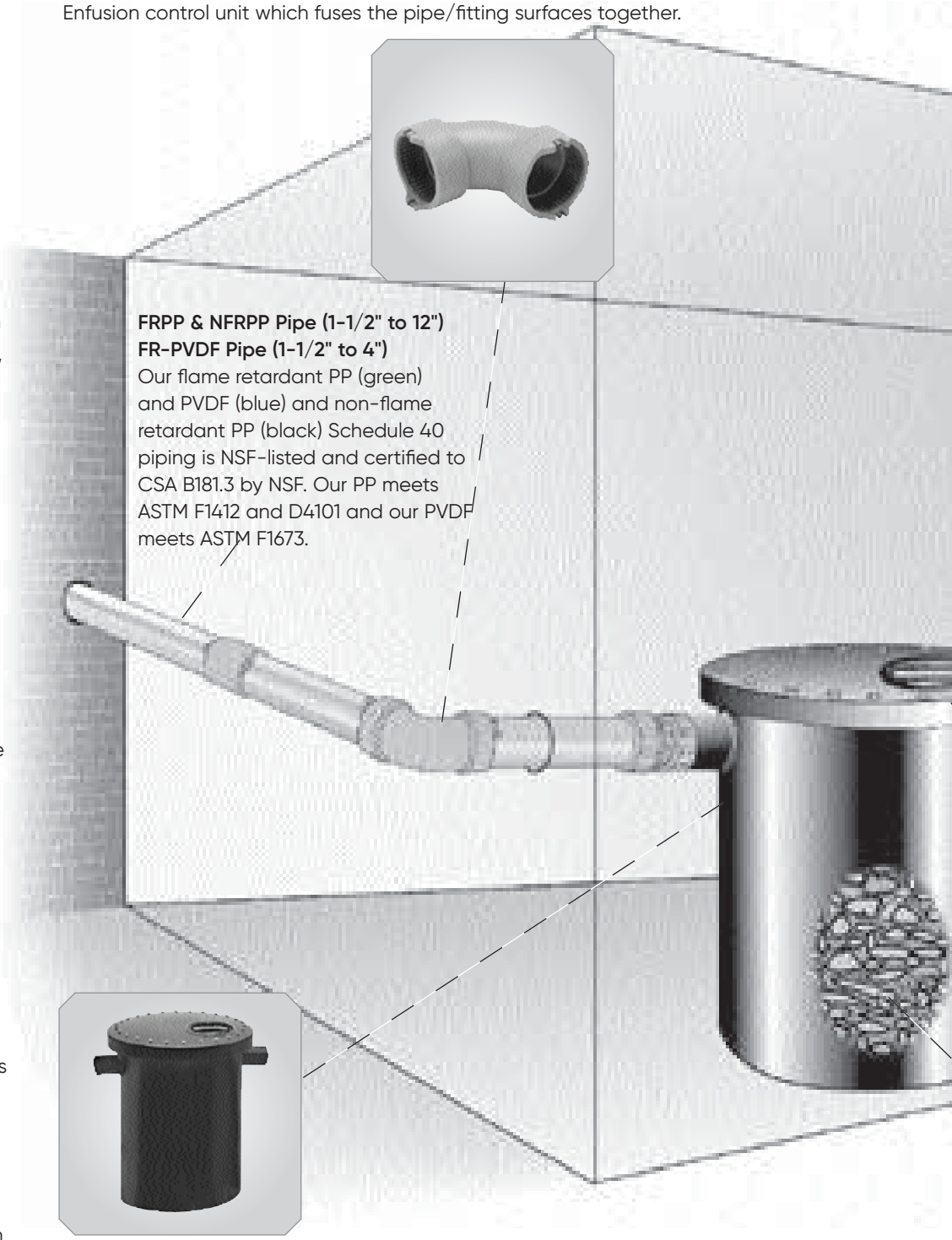

FRPP & NFRPP Pipe (1-1/2" to 12")
FR-PVDF Pipe (1-1/2" to 4")
Our flame retardant PP (green) and PVDF (blue) and non-flame retardant PP (black) Schedule 40 piping is NSF-listed and certified to CSA B181.3 by NSF. Our PP meets ASTM F1412 and D4101 and our PVDF meets ASTM F1673.

Neutratanks
Neutratanks are made of high-density polyethylene or polypropylene material with one-piece rotationally molded, seamless construction. Neutratanks are available in sizes from 5 gallons to 2,000 gallons to suit most potential design conditions.

Labline and Plenumline Fittings (1-1/2" to 4")
NSF listed, all-plastic construction Labline and Plenumline Fittings allow for rapid (30 second) installation and ensure trouble-free service. The joints can be easily made with our new no-heat Elastolive, even in difficult areas, and can be disassembled and re-used at a later date without spoiling the fittings.

pH Monitor
The UL-listed, NEMA 4X, pH Monitor measures the pH level of the chemical waste, visually shows pH levels on an analog display and permanently records the results (optional). The monitor will audibly and visually alarm maintenance personnel when unacceptable pH levels are sensed.

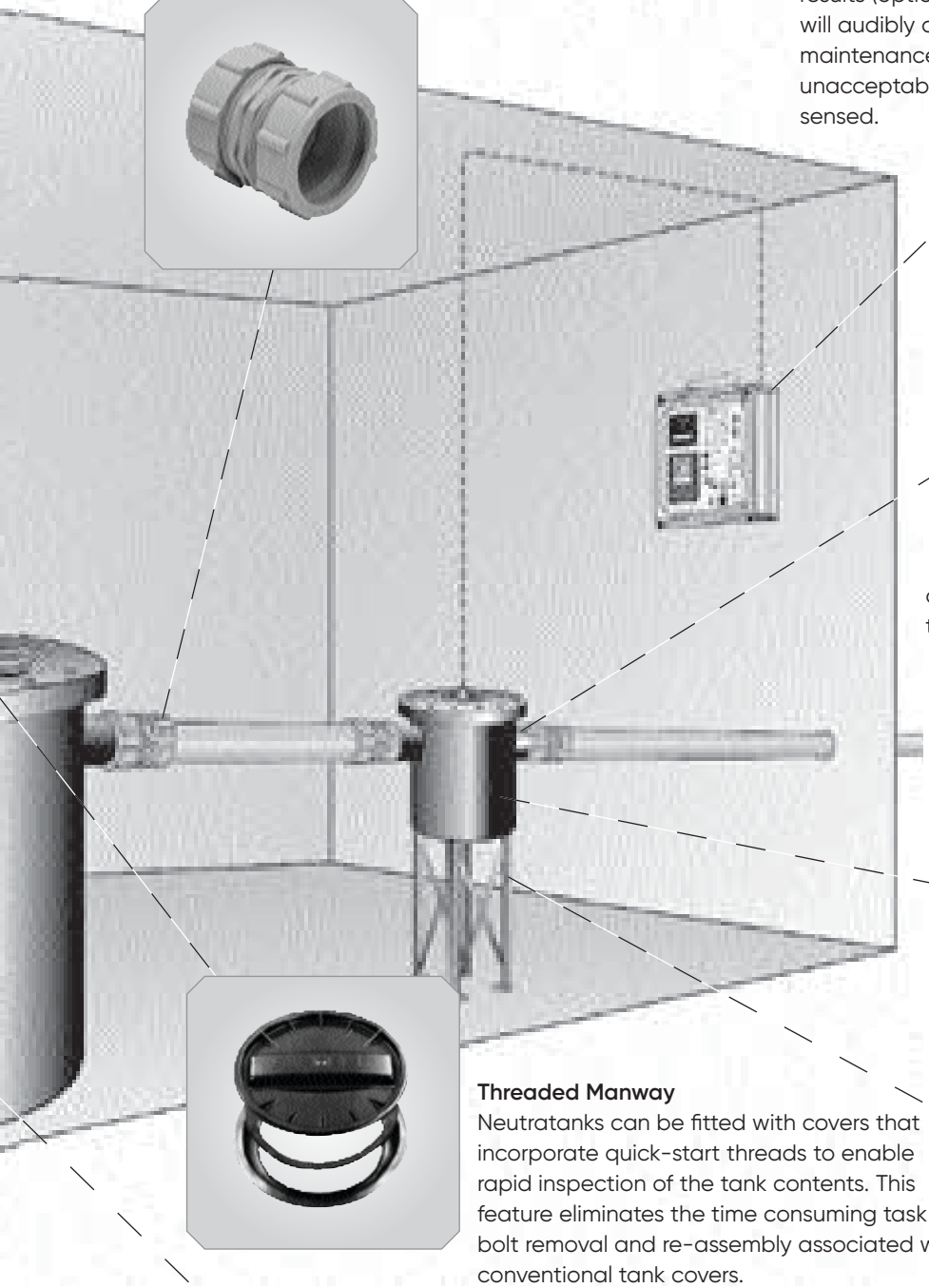

Sampling Tank
5-gallon, high-density polyethylene Sampling Tank incorporates a bolt down cover and a series 6510, extended life, removable pH electrode which measures the pH level of the chemical waste before it is discharged into the sewer system.

Removable pH Electrode
The pH electrode is encapsulated in a chemically resistant CPVC body with viton O-rings. Its twist-lock design ensures quick, easy removal and installation of the electrode. The electrode is fast responding, highly efficient and ensures that pH variations are continuously and accurately measured.

Threaded Manway
Neutratanks can be fitted with covers that incorporate quick-start threads to enable rapid inspection of the tank contents. This feature eliminates the time consuming task of bolt removal and re-assembly associated with conventional tank covers.

Sampling Tank Support
All sampling tanks must be independently supported to avoid undue stressing of the components (support supplied by others).

Limestone Chips
Neutratanks should be filled with an approved neutralization agent such as limestone chips, one to three inches in size, to a level just below the tank outlet. Water should then be added to the tank after placement of the neutralization agent. During the course of neutralization, the limestone chips will naturally be exhausted and require replenishment.

BENEFITS

ENFIELD®

Enfield electrofusion fittings are molded with an integral resistance wire in the socket, with jointing completed by energizing the resistance wire via a microprocessor controlled Enfusion Control Unit. The result of these innovations is an unparalleled level of joint reliability and repeatability. Enfield has proven over time that it produces the optimum level of performance where it matters most - at the joint interface. It offers unprecedented control of jointing - controlled fit, controlled temperature and controlled time.

- Positive reliable joints made in 2 minutes – installation time reduced
- Several joints can be made at one time
- Proven reliability for over a decade
- Enfield is manufactured from polypropylene which has an operating temperature range from -20°F (-29°C) to 212°F (100°C).* This allows systems to be flushed with boiling water
- Heavy gauge resistance wire molded into sockets –no loose components, controlled fusion of joints
- Easy connecting heavy duty socket terminal posts complete with protection ears
- Microprocessor controlled Enfusion unit ensures secure joints and joint repeatability
- Matched system
  - high quality pipe and fittings are matched to give ease of installation and long term reliability
- Easy to install
  - even in difficult areas
- Installed cost 50% less than glass
- Breakage factor eliminated
- Maintenance free
- NSF-approved, IAPMO-listed & CSA-certified, meets ASTM F1412, D4101 and CSA B181.3

ENFUSION HAND HELD CONTROL UNIT

- Voltage sensing process will not start, (or will halt), unless connections are secure and input/output voltages are in the bilization of output from a wide range of input voltages
- The Enfusion system is an 18 amp constant current system that will generate a voltage ranging from 3 volts to 50 volts
- Automatic adjustment of fusion time for varying ambient temperature conditions
- Self Diagnostic Unit, self monitors and automatically reads current conditions
- Automatic alarm for cycle interruption
- May be able to re-start unit at cut-off time after fusion cycle interruption
- Rugged, impact resistant construction
- Light-weight and easy to handle
- 2 lb hand held unit for ease of use
- Proven reliability in service
- Multiple joint fusion
- IP 65 gasketed case protects from the elements
- Operating temperature range: 0°F to 120°F

* Recommended constant operating temperature is 180°F with intermittent 212°F service.

LABLINE®

Labline (Mechanical Joint) has displaced the more expensive and difficult to install glass and metal systems. Gone is the need for fusing, caulking or welding of joints. Because it is a mechanical joint, the system can be easily dismantled and re-used, making it ideal for modular designs and for systems that may require re-modeling in the future.

- Proven reliability for over 30 years
- Labline is manufactured from polypropylene which has an operating temperature range from -20°F (-29°C) to 212°F (100°C).* This allows systems to be flushed with boiling water
- All plastic construction
  - no galvanic action, electrolysis or corrosion in the joint
- Simple, inexpensive, non-temperamental tools
- Easy to install, even in difficult areas
- Mastered by plumbers in minutes.
  No pre-heating required to install olive
- System changes during installation can be done without spoiling fittings
- Can be disassembled and re-used
- Ideal for modular systems
- Ideal for remodeling
- Matched system
  - high quality pipe and fittings are matched to give ease of installation and long term reliability
- NSF-approved, IAPMO-listed & CSA-certified, meets ASTM F1412, D4101 and CSA B181.3

* Recommended constant operating temperature is 180°F with intermittent 212°F service.

PLENUMLINE™

Plenumline mechanical joint acid waste systems easily displace costly and difficult-to-install glass and metal systems. With Plenumline, time-consuming methods associated with conventional heavy and brittle systems are replaced by a time proven mechanical joint that takes only 30 seconds to complete. Once the Plenumline nut is locked in place, the end-user is assured of many years of trouble-free service. In addition, mechanical joint systems can easily be dismantled and re-used, making Plenumline ideal for modular designs and future expansions.

- Ideally suited to plenum applications
- 30-second joints shorten installation time
- Manufactured from Flame Retardant PVDF, which has an operating temperature range from -40°F (-40°C) to 285°F (140°C). With this high upper limit, Plenumline systems can be flushed with boiling water.
- All-plastic construction eliminates galvanic action, electrolysis and corrosion in the joint.
- Easy to install, even in tight areas, by using simple, inexpensive tools. Mechanical joints are mastered by plumbers in minutes; no pre-heating is required to install the new blue elastolive.
- Modularized design means Plenumline components can be disassembled and re-used. In addition, system modifications during installation can be performed without damaging fittings.
- High-quality pipe and fittings are matched to simplify installation and extend long-term reliability.
- Flame Retardant PVDF material exhibits a flame spread index of 5 and smoke development index of 35 as tested in accordance with ASTM E84 and UL723.
- IAPMO-listed, meets ASTM F1673, Standard specification for Polyvinylidene Fluoride (PVDF) Corrosive Waste Drainage Systems.
- NSF listed, certify to CSA B181.3.
- Listed to CAN/ULC-S102.2

Encase™ DOUBLE CONTAINMENT

In certain industries there is little margin for error; all potential for accidents must be eliminated. This is particularly important where radioactive fluid wastes or particularly dangerous chemicals are being conveyed through the waste drainage system.

While Enfield/Labline is the ideal material, our double containment Encase system eliminates problems which may arise from leakage, while at the same time giving a warning that leakage is present in the system.

Encase Double Containment is part of a total integrated single and dual containment approach to above and below ground chemical waste drainage.

In below ground drainage work where the legislative responsibility, environmental impact, and cost of contamination of ground water supplies is of growing concern, Encase Double Containment provides the highest level of safety and integrity possible in handling such materials.

Proven System

Encase double containment utilizes the proven Enfield chemical waste drainage system as the primary and secondary pipework carrier. The secondary pipework is a larger diameter pipe which, holding the primary pipework central with a series of spacers, is also fully sealed by the electrofusion process.

The Enfield electrofusion jointing process has been proved over the last 35 years in many installations throughout the world. It has been confirmed to be superior to butt fusion and other electrofusion methods.

Encase Double Containment systems are available with our Centra-Guard detection system. For additional informaiton on the Encase Double Containment Systems, please see IPEX Technical Manual Volume VI: Double Containment Piping Systems.

MATERIAL DESCRIPTION

IPEX's flame retardant polypropylene (FRPP) material used to manufacture Enfield pipe exceeds the requirements of PP110 (pipe). Flame retardant polypropylene material used to manufacture Enfield and Labline fittings exceed the requirements of PP210 (fittings) material as described in ASTM D4101. ASTM D4101 lists the following properties for both pipe and fittings.

IPEX also offers our Acid Waste system in a non-flame retardant polypro material. Enfield NFRPP pipe complies with ASTM F1412 and the material used in the manufacturing of the pipe complies with material requirements of ASTM D4101.

Plenumline™ acid waste systems are constructed from flame-retardant PVDF (polyvinylidene fluoride), a strong, abrasion-resistant thermoplastic with excellent heat stability and chemical resistance typical of fluorocarbon polymers. Plenumline™ can be used in temperatures up to 285°F (140°C) with a wide variety of acids, bases and organic solvents, and is ideally suited for handling wet or dry chlorine, bromine and other halogens.

No other thermoplastic piping material can approach the combination of strength, chemical resistance and operating temperature that FRPP piping systems can offer.

ASTM D4101 Properties

Property	Value	Standard
Specific Gravity	0.94	D1505
Tensile Yield Strength @ 2"/Min., psi	3,400 – 4,000	D638
Flexural Modulus, psi	140,000 – 180,000	D790
Hardness, Rockwell R	100	D1706
Izod Impact, Notched, ft-lb/in.	> 1.0	D256
Coefficient of Linear Expansion, in/in/°F	6×10^{-5}	D696
Heat Deflection Temperature @ 66 psi load, °F	180 – 220	D648
Heat Deflection Temperature @ 264 psi load, °F	130 – 180	D648
Water Absorption. 24 hrs.,%	0.02	D570
Time of Burning (sec.)	<5	D635
Extent of Burning (mm)	<5	
Burning Class	V2	UL94
Maximum Smoke Density	62.0	D2843
Smoke Density Rating	40.1	
Oxygen Index, %	28	D2863

Physical Properties of FR-PVDF

Property	FR-PVDF	Standard
Specific Gravity	1.77 – 1.79	-
Water Absorption, %, 24 hrs. @ 73°F	0.01 – 0.03	
Flexural modulus, psi	240,000 - 335,000	ASTM D790
Tensile yield elongation, %	5 – 10	ASTM D638
Tensile break elongation, %	50 – 200	ASTM D638
Tensile modulus, psi	200,000 - 335,000	ASTM D638
Deflection temperature @ 264 psi, °F	221 – 239	ASTM D648
Deflection temperature @ 66 psi, °F	257 – 284	ASTM D648
Impact strength (notched Izod), ft-lb/in.	2 – 4	ASTM D256
Hardness, shore D	76 – 80	
Melting temperature, °F	329 – 338	
Coefficient of thermal expansion, 10^{-5} °F	6.6 – 8.0	ASTM D696
Thermal conductivity, BTU-in/hr per ft^2 °F	1.18 – 1.32	ASTM D433
Burning rate	V-0	UL/Bulletin 94
Limiting oxygen index	60	ASTM D2868
Flame spread rating	5	UL723 / ASTM E84
Smoke development classification	35	UL723 / ASTM E84

Chemical Resistance

Thermoplastics have outstanding resistance to a wide range of chemical reagents. Such resistance is a function of both temperature and concentration, and there are many reagents which can be handled for limited temperature ranges and concentrations.

Chemical resistance is often affected (and frequently reduced) when handling a number of chemicals or compounds containing impurities. When specific applications are being considered, therefore, it is often worthwhile to conduct tests using the actual fluid that will be used in service.

PP is generally high in chemical resistance. It is capable of handling a pH ranging from 1 to 13 being resistant to organic solvents as well as acids and alkalies. Due to its general sensitivity to oxidizing agents, special care must be taken when using it with strong acids and hydrocarbons containing helides and aromatic groups.

Many factors can affect the chemical resistance of materials. These include, but are not limited to, exposure time, concentration of chemical, extremes of temperature, frequency of temperature cycling, attrition due to abrasive particles, and the type of mechanical stress imposed. The fact that certain combinations of chemicals and mechanical load can induce stress cracking in many otherwise chemically resistant materials, both metallic and nonmetallic, is of particular significance. In general, the broader molecular weight distribution of Plenumline FR-PVDF resin will result in greater resistance to stress cracking.

In borderline cases, there may be limited attack, generally resulting in some swelling due to absorption. There are also many cases where some attack will occur under specific conditions. For such applications, the use of plastic is often justified on economic grounds when considered against alternative materials.

SECTION TWO: DIMENSIONS

PIPE DIMENSIONS

Dimensional data in this manual is subject to change without notice.

The following dimensions are given as a guide to engineers and installers. They are subject to change and to manufacturing tolerances. Prior to utilizing these dimensions in a CAD system, or in the preparation of prefabricated pipe sections, consult IPEX to verify the appropriate tolerances and dimensions are current.

Pipe Schedule 40, 10ft Standard Lengths

Cat. No.	Size (in)	t min.	A (in)
W001 / W001P	1-1/2	0.145	1.900
W002 / W002P	2	0.154	2.375
W003 / W003P	3	0.216	3.500
W004 / W004P	4	0.237	4.500
W006	6	0.280	6.625
W008	8	0.322	8.625
W010	10	0.365	10.750
W012	12	0.406	12.750

Flame retardant

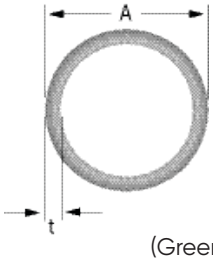

(Green / Blue)

Pipe Schedule 40 & 80, 20ft Standard Lengths

Sch. 40 Cat. No.	Sch. 80 Cat. No.	Size (in)	t min. (Sch 40)	t min. (Sch 80)	A (in)
WB01	WB1106	1-1/2	0.145	0.200	1.900
WB02	WB1107	2	0.154	0.218	2.375
WB03	WB1108	3	0.216	0.300	3.500
WB04	WB1109	4	0.237	0.337	4.500
WB06	WB1110	6	0.280	0.432	6.625
WB08	WB1111	8	0.322	0.500	8.625
WB10	WB1112	10	0.365	0.593	10.750
WB12	WB1113	12	0.406	0.687	12.750

Non-flame retardant

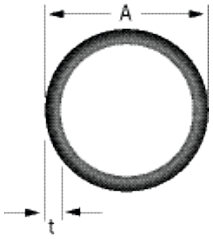

(Black)

Fitting End Abbreviations

EJ - Enfield Joint
MPT - Male Pipe Thread
FPT - Female Pipe Thread
FST - Female Straight Thread
MST - Male Straight Thread
LN - Loose Nut (mates with EJ male thread)

ENFIELD FITTING DIMENSIONS

90° Sweep Socket x Loose Nut

Cat. No.	Size (in)	A (in)	B (in)
L291A	1-1/2	1-3/4	3

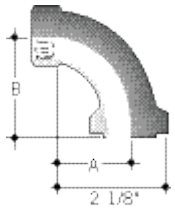

1/4 Bend Socket x Socket

Cat. No.	Size (in)	E (in)
L181	1-1/2	1-3/4
L182	2	2-1/8
L183	3	3-1/16
L184	4	3-7/8
L186	6	5

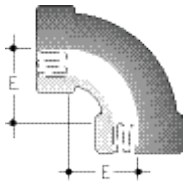

90° Sweep Socket x Socket

Cat. No.	Size (in)	E (in)
L171	1-1/2	2-3/4
L172	2	3-1/4
L173	3	4-1/8
L174	4	5-1/4
L176	6	7

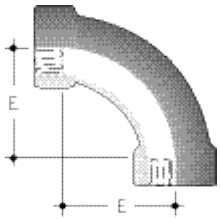

1/4 Bend Socket x Spigot

Cat. No.	Size (in)	E (in)	H (in)
L291	1-1/2	3-1/8	1-3/4
L292	2	3-3/8	2-1/8
L293	3	4-3/4	3-1/16
L294	4	5-13/16	3-7/8
L296	6	7-7/16	5

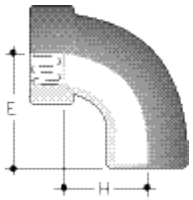

90° Sweep Socket x Spigot

Cat. No.	Size (in)	D (in)	E (in)
L281	1-1/2	2-7/8	4-1/8
L282	2	3-7/16	4-3/4
L283	3	4-3/8	6
L284	4	5-5/16	7
L286	6	6-13/16	9-1/2

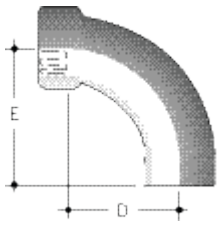

1/8 Bend Socket x Socket

Cat. No.	Size(in)	D(in)
L191	1-1/2	1-1/8
L192	2	2
L193	3	2-5/8
L194	4	2-7/8
L196	6	2-1/4

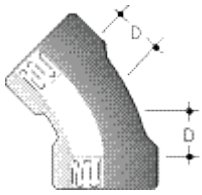

ENFIELD FITTING DIMENSIONS

1/8 Bend Socket x Spigot

Cat. No.	Size (in)	D (in)	F (in)
L211	1-1/2	1-1/8	2-1/2
L212	2	1-3/8	3-1/16
L213	3	2	3-5/8
L214	4	1-15/16	3-13/16
L216	6	2-5/16	4-13/16

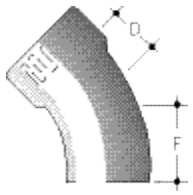

Sanitary Tee Socket

Cat. No.	Size (in)	A (in)	B (in)	C (in)	D (in)
L201	1-1/2	2-1/2	2-1/2	1-3/4	4-1/4
L202	2	2-1/4	2-13/16	2	4-13/16
L203	3	2-15/16	3-1/8	1-3/4	4-7/8
L204	4	4	4	2	6

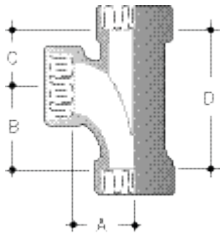

Reducing Tee Socket

Cat. No.	Size (in)	A (in)	B (in)	C (in)	D (in)
L2021	2 x 2 x 1-1/2	2-3/16	1-15/16	1-3/16	3-1/8
L2031	3 x 3 x 1-1/2	5-15/16	3-1/8	1-3/4	4-7/8
L2032	3 x 3 x 2	4-11/16	3-1/8	1-3/4	4-7/8
L2042	4 x 4 x 2	3-1/4	2-1/4	1-1/8	3-1/4
L2043	4 x 4 x 3	6-1/2	4	2	6

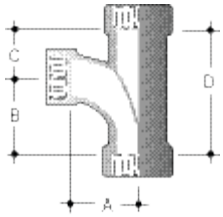

45° Wye Socket

Cat. No.	Size (in)	A (in)	B (in)	C (in)
L371	1-1/2	3-3/16	1-1/16	3-1/4
L372	2	3-5/16	1-3/8	3-5/16
L373	3	5-1/4	1-3/4	5-1/16
L374	4	8-7/16	1-3/4	7-7/16
L376	6	8-7/16	1-3/4	8-1/2

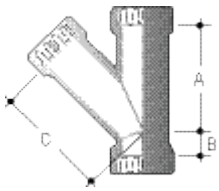

Reducing Wye Socket

Cat. No.	Size (in)	A (in)	B (in)	C (in)
L3721	2 x 2 x 1-1/2	3-9/16	7/8	3-5/8
L3731	3 x 3 x1-1/2	5-7/8	3/4	7-1/4
L3732	3 x 3 x 2	5-7/8	3/4	6
L3741	4 x 4 x 1-1/2	6-3/8	1/2	7-3/4
L3742	4 x 4 x 2	6-3/8	1/2	6-1/2
L3743	4 x 4 x 3	8-7/16	1-3/4	9-15/16
L3761	6 x 6 x 1-1/2	8-1/2	1-3/4	12-3/4
L3762	6 x 6 x 2	8-1/2	1-3/4	11-1/2
L3763	6 x 6 x 3	8-1/2	1-3/4	11-1/2
L3764	6 x 6 x 4	8-1/2	1-3/4	9

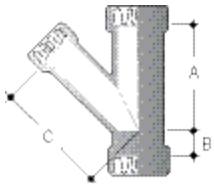

ENFIELD FITTING DIMENSIONS

Combination Wye & 1/8 Bend Socket Bend supplied loose

Cat. No.	Size (in)	A (in)	B (in)	C (in)	D (in)
L3715	1-1/2	3-3/16	5	4-15/16	1-1/16
L3725	2	3-5/16	5-7/8	5-7/8	3/8
L3735	3	5-1/16	8-1/8	7-7/16	5/16
L3745	4	8-7/16	9-7/8	9-11/16	1-3/4
L3755	6	8-7/16	11-13/16	11-1/4	1-3/4

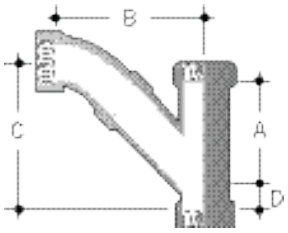

Red. Combination Wye & 1/8 Bend Socket Bend supplied loose

Cat No	Size (in)	A (in)	B (in)	C (in)	D (in)
L37251	2 x 1-1/2	3-9/16	5-1/4	5	7/8
L37351	3 x 1-1/2	5-7/8	7-13/16	7-7/16	3/4
L37352	3 x 2	5-7/8	7-13/16	7-3/16	3/4
L37451	4 x 1-1/2	6-3/8	8-3/16	7-9/16	1/2
L37452	4 x 2	6-3/8	8-1/8	7-1/4	1/2
L37453	4 x 3	8-7/16	11-9/16	11-5/16	1-3/4
L37651	6 x 1-1/2	8-1/2	12-15/16	12-1/16	1-3/4
L37652	6 x 2	8-1/2	11-11/16	12-1/16	1-3/4
L37653	6 x 3	8-1/2	12-11/16	12-7/16	1-3/4
L37654	6 x 4	8-1/2	11	10-13/16	1-3/4

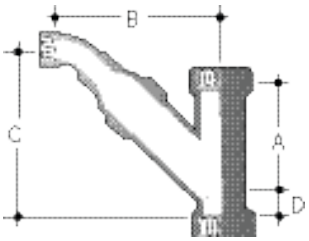

Double Sanitary Tee Socket

Cat. No.	Size (in)	A (in)	B (in)	C (in)	D (in)
L351	1-1/2	3-11/16	2-1/2	3-11/16	6-3/16
L352	2	2-7/16	1-1/4	2-7/16	3-11/16
L353	3	3-1/4	1-5/8	3-1/4	4-7/8
L354	4	4	2-1/8	4	6-1/8

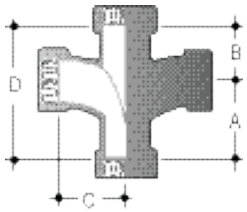

Reducing Double Sanitary Tee Socket

Cat. No.	Size (in)	A (in)	B (in)	C (in)	D (in)
L3521	2 x 1-1/2	3-11/16	2-7/16	1-1/4	3-11/16
L3531	3 x 1-1/2	5	3-1/4	1-5/8	4-7/8
L3542	4 x 2	3-1/4	2-3/16	1-1/16	3-1/4
L3543	4 x 3	6-1/2	4	2-1/8	6-1/8

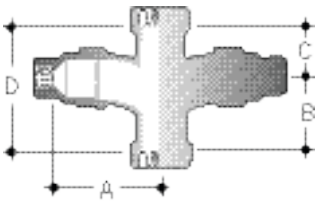

ENFIELD FITTING DIMENSIONS

Reducing Bushing Spigot x Socket

Cat. No.	Size (in)	A (in)
L3912	2 x 1-1/2	1-1/4
L3913	3 x 1-1/2	1-3/4
L3923	3 x 2	1-3/4
L3914	4 x 1-1/2	3-3/4
L3924	4 x 2	2-1/2
L3934	4 x 3	2-1/2
L3916	6 x 1-1/2	2-1/2
L3936	6 x 3	4-7/8
L3946	6 x 4	3

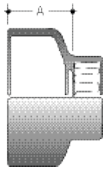

Cleanout Disassembled Length

Cat. No.	Size (in)	A (in)
L241	1-1/2	5-1/4
L242	2	6
L243	3	5-7/8
L244	4	7
L246	6	11-5/8 (disassembled) 10 (assembled)

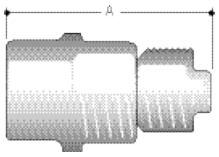

Cleanout Plug Male Thread

Cat. No.	Size (in)	A (in)
L241A	1-1/2	2-1/4
L242A	2	2-5/16
L243A	3	2-5/16
L244A	4	3

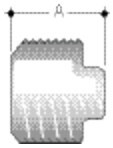

Cleanout w/ Brass Plug Disassembled Length

Cat. No.	Size (in)	A (in)
L2403	3	4-1/2
L2404	4	5

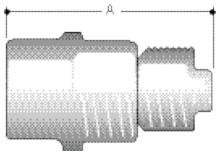

Cap Socket

Cat. No.	Size (in)	A (in)	B (in)	C (in)
L639	1-1/2	1-1/4	2-3/8	15/16
L640	2	1-1/8	2-7/8	1-7/16

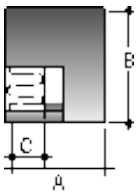

ENFIELD FITTING DIMENSIONS

Adapter Female Thread x Loose Nut

Cat. No.	Size (in)	A (in)	B (in)
L101	1-1/2	1-1/2	2-11/16

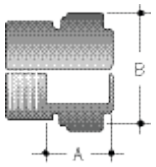

Adapter Socket x Loose Nut

Cat. No.	Size (in)	A (in)	B (in)
L111	1-1/2	1-1/2	2-7/16

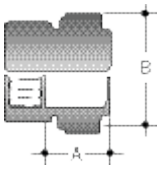

Male Adapter Male Thread x Socket

Cat. No.	Size (in)	A (in)
L141	1-1/2	5/16
L142	2	5/16

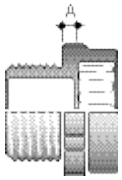

Female Adapter Female Thread x Socket

Cat. No.	Size (in)	A (in)
L151	1-1/2	7/16
L152	2	3/8
L153	3	1/4
L154	4	3/8

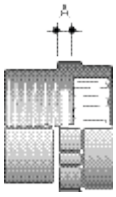

ENFIELD FITTING DIMENSIONS

Glass Adapter Socket x Bead

Cat. No.	Size (in)	A (in)
L451	1-1/2	1-1/8
L452	2	1-5/16
L453	3	1-9/16
L454	4	1-5/8

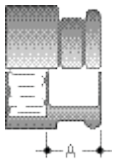

Duriron Adapter EJ X Spigot

Cat. No.	Size (in)	A (in)
L461	1-1/2	1-9/32

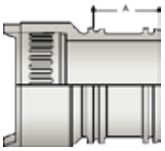

Cast Iron Adapter Spigot x Socket

Cat. No.	Size (in)	A (in)
L460	1-1/2	1-7/32
L462	2	1-5/8
L463	3	2-1/8
L464	4	2-1/8

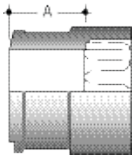

Flange Socket,ANSI 150 bolt pattern

Cat. No.	Size (in)	A (in)	B (in)	C (in)	D (in)	E (in)
L361	1-1/2	3-7/8	5-1/8	5/8	13/16	9/16
L362	2	4-3/4	6-3/16	11/16	15/16	11/16
L363	3	6	7-3/8	15/16	1-1/8	11/16
L364	4	7-7/16	8-15/16	1-1/16	1-3/8	11/16
L366	6	9-1/2	10-15/16	1-1/16	13/16	13/16

Note: Backing plates, bolts and gaskets should be ordered as separate items. Suitable gasket material must be selected.

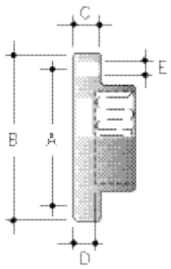

P Trap 2-piece, Socket x Socket

Cat. No.	Size (in)	A (in)	B (in)	C (in)	D (in)
L1021	1-1/2	5	5-5/16	2-5/16	3-1/4
L1022	2	7-1/8	6-7/16	3-1/16	5

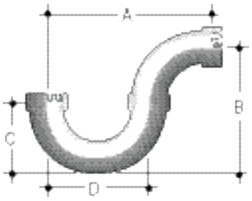

ENFIELD FITTING DIMENSIONS

P Trap 3-piece, Socket x Socket

Cat. No.	Size (in)	A (in)	B (in)	C (in)	D (in)
LT13	3	14-1/2	11-7/8	6-1/8	10-1/8
LT14	4	17-9/16	14-1/2	7-9/16	12-1/4
LT16	6	23-5/16	19-13/16	10-1/8	16-1/2

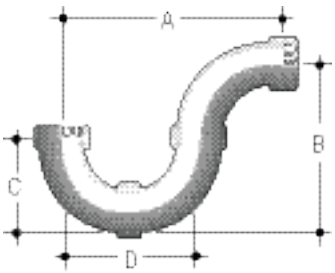

Universal Traps

Cat. No.	Type	Size (in)	Outlet	Base
L501	P	1-1/2	Socket	Solid
L5011	P	1-1/2	FPT	Solid
L511*	P	1-1/2	Socket	Clear
L5111*	P	1-1/2	FPT	Clear
L5015	S	1-1/2	Socket	Solid
L5115*	S	1-1/2	Socket	Clear

* Clear base made from TPX (Methylpentene Copolymer)

A (in)	B (in)	C (in)	D (in)	E (in)	F (in)
2-3/16	3-7/8	5-1/2	4-5/16	2	5-1/4

Note: 3" deep seal Universal Traps have a 1-1/2" loose nut inlet which connects directly to Enfield cup sinks and sink outlets or can be adapted to other brands by means of adapters W121 and W131. All universal trap adapters contain nitrile gaskets. Other special chemical resistance gaskets are available upon request.

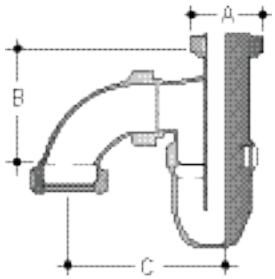

S-type

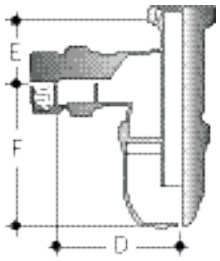

P-type

Vent Loop / U Bend

Cat. No.	Size (in)	E (in)	F (in)	L (in)	M (in)
L1011	1-1/2	2-5/16	3-1/4	5-5/8	3-1/16
L1012	2	3-1/16	5	7-13/16	4-1/16

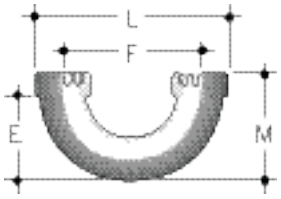

ENFIELD FITTING DIMENSIONS

Note: Enfield fabricated fittings are custom made from pipe, couplings and molded fittings. Due to manufacturing constraints, some fittings may not be exactly symmetrical or appear as sketched. **The dimensions provided are approximate and should not be used to create precise layouts.**

Coupling & Fabricated Cap Socket

Coupling Cat. No.	Cap Cat. No.	Repair Coupling Cat. No.	Size (in)	A (in)	B (in)	C (in)	Cap
L161	–	L161R	1-1/2	1/4	2-3/8	1	–
L162 / L162B	–	L162R	2	5/16	2-7/8	1-1/4	–
L163 / L163B	L643	L163R	3	1/2	4	1-3/8	1/2
L164 / L164B	L644	L164R	4	1/2	5-1/16	1-1/2	1/2
L166 / L166B	L646	L166R	6	1/2	7-3/16	2	2-1/2

Suffix 'B' indicates Black Non-Flame Retardant PP
'B' is the fitting OD dimension
'C' is the socket depth

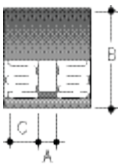

Coupling

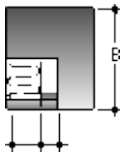

Cap

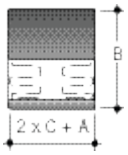

Repair Coupling

Large Diameter Coupling & Fabricated Cap Socket

Coupling Cat. No.	Cap Cat. No.	Repair Coupling Cat. No.	Size (in)	A (in)	B (in)	C (in)	Cap
L168 / L168B	L648	L168R	8	1/2	9-1/4	2-1/4	2-3/4
L1610 / L1610B	L6410	–	10	3/16	11-1/2	2-5/8	2-3/4
L1612 / L1612B	L6412	–	12	3/16	13-5/8	2-3/4	2-7/8

Suffix 'B' indicates Black Non-Flame Retardant PP

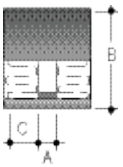

Coupling

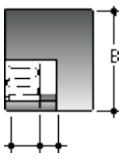

Cap

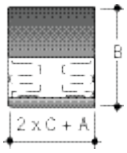

Repair Coupling

Fabricated Repair Couplings Socket

Coupling Cat. No.	Size (in)	A (in)	B (in)	C (in)
L162R	2	1/4	2-13/16	1
L163R	3	3/8	4	1-3/8
L164R	4	7/16	5-1/16	1-1/2
L166R	6	1/2	7-3/16	2
L168R	8	1/2	9-3/8	2-1/4

ENFIELD FITTING DIMENSIONS

Fabricated Sanitary Tee Socket

Cat. No.	Size (in)	A (in)	B (in)	C (in)	D (in)
L2062	6 x 2	10-7/16	7-3/8	3-5/8	11
L2063	6 x 3	11-3/16	8-1/8	3-7/8	12
L2064	6 x 4	11-1/2	8-7/18	4-1/8	13
L206	6 x 6	12-1/2	11-7/16	5-13/16	17-1/4
L2083	8 x 3	12-13/16	9	4-11/16	13-11/16
L2084	8 x 4	12-1/2	9-15/16	5-1/4	15-3/16
L2086	8 x 6	13-1/2	11-7/16	6-5/16	18-3/16
L208	8 x 8	14-3/8	13-9/16	7-1/8	20-11/16
L20103	10 x 3	13-1/4	9-1/16	4-13/16	13-7/8
L20104	10 x 4	13-9/16	10	5-5/16	15-3/8
L20106	10 x 6	14-9/16	11-15/16	6-3/8	18-3/8
L20108	10 x 8	15-7/16	13-5/8	7-1/4	20-7/8
L2010	10 x 10	16-1/16	15-13/16	8-9/16	24-3/8
L20124	12 x 4	14-9/16	9-15/16	5-1/4	15-1/8
L20126	12 x 6	15-9/16	11-7/8	6-5/16	18-1/8
L20128	12 x 8	16-7/16	13-5/8	7-1/4	20-7/8
L201210	12 x 10	17-1/16	15-11/16	8-7/16	24-1/8
L2012	12 x 12	17-3/4	17-3/8	9-1/4	26-5/8

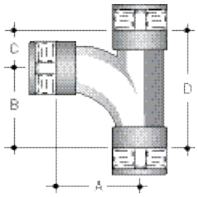

Fabricated 45° Wye Socket

Cat. No.	Size (in)	A (in)	B (in)
L3782	8 x 2	9-15/16	12-3/16
L3783	8 x 3	11-3/8	13-11/16
L3784	8 x 4	11-13/16	15-3/16
L3786	8 x 6	12-15/16	18-3/16
L378	8 x 8	14-1/2	20-11/16
L37103	10 x 3	12-7/8	13-7/8
L37104	10 x 4	13-5/16	15-3/8
L37106	10 x 6	14-7/16	18-3/8
L37108	10 x 8	16	21-1/8
L3710	10 x 10	17-3/4	24-3/8
L37123	12 x 3	14-1/4	13-5/8
L37124	12 x 4	14-11/16	15-1/8
L37126	12 x 6	15-13/16	18-1/8
L37128	12 x 8	17-7/16	20-7/8
L371210	12 x 10	19-3/16	24-1/8
L3712	12 x 12	20-1/16	26-5/8

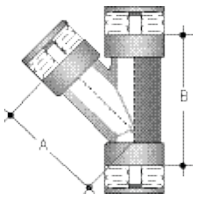

ENFIELD FITTING DIMENSIONS

Fabricated 1/8 Bend Socket x Socket

Cat. No.	Size (in)	A (in)
L198	8	6-7/8
L1910	10	7
L1912	12	7-5/16

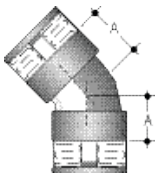

Fabricated 1/4 Bend Socket x Socket

Cat. No.	Size (in)	A (in)
L188	8	12-3/4
L1810	10	13-9/16
L1812	12	14-5/8

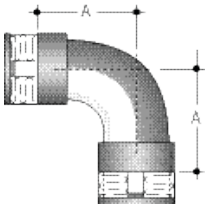

Fabricated Socket Flange Socket, ANSI 150 bolt pattern

Cat. No.	Size (in)	d1 (in)	d2 (in)	E (in)	F (in)	G (in)
L368	8	11-3/4	13-1/2	3/4	7/8	1/4
L3610	10	14-1/4	16	3/4	1	1/4
L3612	12	17	19	3/4	1	1/4

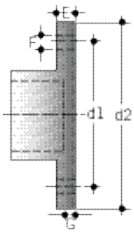

Note: Backing plates, bolts and gaskets should be ordered as separate items.
See Standard Bolt Dimensions at end of section. A suitable gasket material must be selected.

Fabricated Blind Flange

Cat. No.	Size (in)	d1 (in)	d2 (in)	G (in)	F (in)
L3688	8	11-3/4	13-1/2	3/4	7/8
L361010	10	14-1/4	16	3/4	1
L361212	12	17	19	3/4	1

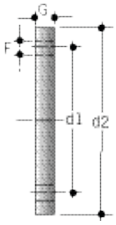

Note: Backing plates, bolts and gaskets should be ordered as separate items.
See Standard Bolt Dimensions at end of section. A suitable gasket material must be selected.

Fabricated Reducing Bushing Spigot x Socket

Cat. No.	Size (in)	A (in)
L3938	8 x 3	4-3/4
L3948	8 x 4	2-3/4
L3968	8 x 6	2-3/4
L39410	10 x 4	6-3/4
L39610	10 x 6	6-3/4
L39810	10 x 8	4
L39412	12 x 4	10-15/16
L39612	12 x 6	10-13/16
L39812	12 x 8	8
L391012	12 x 10	4

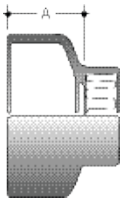

ENFIELD FITTING DIMENSIONS

Fabricated Combination Wye & 1/8 Bend Socket

Cat. No.	Size (in)	A (in)	B (in)	C (in)
L37853	8 x 3	11-1/8	13-11/16	14-5/16
L37854	8 x 4	12-3/4	15-3/16	15-3/8
L37856	8 x 6	16-1/8	18-3/16	17-11/16
L3785	8 x 8	19-3/16	20-11/16	20-1/16
L371053	10 x 3	11-3/16	13-7/8	15-3/8
L371054	10 x 4	12-7/8	15-3/8	16-7/16
L371056	10 x 6	16-3/16	18-3/8	18-3/4
L371058	10 x 8	19-5/16	20-7/8	21-1/8
L37105	10 x 10	22-7/8	24-3/8	23-1/8
L371253	12 x 3	11-1/16	13-5/8	16-3/8
L371254	12 x 4	12-3/4	15-1/8	17-7/16
L371256	12 x 6	16-1/8	18-1/8	19-3/4
L371258	12 x 8	19-5/16	20-7/8	22-1/8
L3712510	12 x 10	22-13/16	24-1/8	24-1/8
L37125	12 x 12	25-7/8	26-5/8	26-1/4

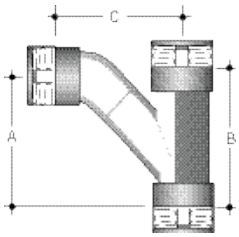

Fabricated Double 45° Wye Socket

Cat. No.	Size (in)	A_1 (in)	A_2 (in)	B (in)
L3821	2 x 1-1/2	3-5/8	4-1/4	4-7/16
L382	2 x 2	3-5/16	4-1/2	4-11/16
L3832	3 x 2	6	6-3/4	6-5/8
L383	3 x 3	5-1/16	6-1/4	6-3/8
L3842	4 x 2	6-1/2	6-7/8	6-7/8
L3843	4 x 3	9-15/16	10-15/16	10-3/16
L348	4 x 4	7-7/16	7-1/2	10-3/16
L3864	6 x 4	6-5/16	6-5/16	13
L368	6 x 6	11-1/2	11-1/2	17-1/4
L886	8 x 6	12-15/16	12-15/16	18
L388	8 x 8	14-1/2	14-1/2	20-1/2
L38104	10 x 4	13-5/16	13-5/16	15-3/8
L38106	10 x 6	14-7/16	14-7/16	18-3/8
L38108	10 x 8	16	16	21-1/8
L3810	10 x 10	17-3/4	17-3/4	24-1/4
L38124	12 x 4	14-11/16	14-11/16	15-1/8
L38126	12 x 6	15-13/16	15-13/16	18-1/8
L38128	12 x 8	17-7/16	17-7/16	20-7/8
L381210	12 x 10	19-3/16	19-3/16	24-1/8
L3812	12 x 12	20-1/8	20-1/8	26-11/16

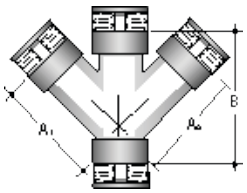

ENFIELD FITTING DIMENSIONS

Fabricated Double Combination Wye & 1/8 Bend Socket

Cat No	Size (in)	A (in)	B_1 (in)	B_2 (in)	C_1 (in)	C_2 (in)	D (in)
L3825	2 x 2	3-5/16	5-7/8	6-13/16	6-1/8	6-1/8	1-3/8
L38352	3 x 2	5-7/8	7-13/16	7-9/16	7-1/8	7-1/8	3/4
L3835	3 x 3	5-1/16	8-1/8	9	7-3/4	7-3/4	1-5/16
L38452	4 x 2	6-3/8	8-1/2	8-5/16	7	7-1/8	1/2
L3845	4 x 4	8-7/16	9-7/8	10-1/8	9-9/16	9-9/16	1-3/4
L3865	6 x 6	12-1/8	11-5/8	11-5/8	14-1/2	14-1/2	5-1/8

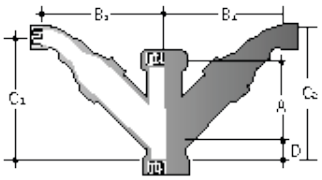

Fabricated P Trap Socket

Cat No	Size (in)	A (in)	B (in)	C (in)	D (in)
LT18	8	34-1/2	28-1/2	17	22-3/4
LT110	10	38	32	19	24-3/4

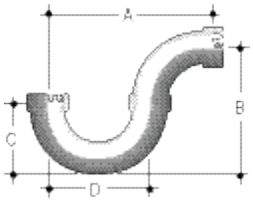

Fabricated Cleanout Tee Socket

Cat No	Size (in)	A (in)	B (in)
L901	1-1/2	12	4-11/16
L902	2	9-1/2	4-11/16
L903	3	9-7/8	4-7/8
L904	4	9-15/16	5-5/8

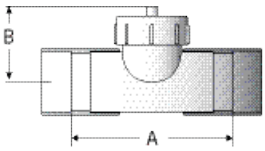

Fabricated Expansion Joint

Cat No	Size(in)	A(in)
L803	3	13-1/2
L804	4	13-5/8
L806	6	18

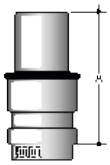

Note: Enfield fabricated fittings are custom made from pipe, couplings and molded fittings. Due to manufacturing constraints, some fittings may not be exactly symmetrical or appear as sketched. The dimensions provided are approximate.

LABLINE AND PLENUMLINE FITTING DIMENSIONS

Coupling

Cat No	Size (in)	B (in)	D (in)	L (in)	Z (in)
W161 / W161P	1-1/2	3/4	2-7/16	2-3/16	1/8
W162 / W162P	2	1-3/32	3-1/16	2-1/2	1/8
W163 / W163P	3	1-3/4	4-29/32	4-1/4	1/4
W164 / W164P	4	2-1/4	6	5-1/2	1/4

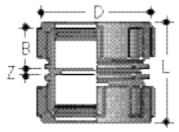

1/4 Bend

Cat. No.	Size (in)	E (in)	L (in)
W181 / W181P	1-1/2	1-11/16	2-15/16
W182 / W182P	2	2-1/2	4-1/8
W183 / W183P	3	3-3/8	5-5/8
W184 / W184P	4	3-15/16	7-3/16

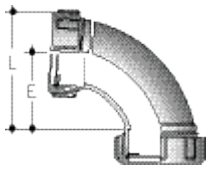

Loose Nut 1/4 Bend MJ X LN

Cat. No.	Size (in)	G (in)	H (in)	L (in)
W291 / W291P	1-1/2	2-9/16	2-1/8	3-1/8
W292 / W292P	2	3-11/16	2-1/2	3-11/16
W293 / W293P	3	5-3/8	3-7/16	4-15/16
W294 / W294P	4	6-9/16	4-1/8	6-7/16

Use to convert universal traps to "S" type making up tubular traps.

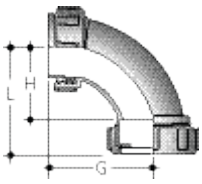

1/8 Bend

Cat. No.	Size (in)	E (in)	L (in)
W191 / W191P	1-1/2	5/8	1-9/16
W192 / W192P	2	5/8	1-7/8
W193 / W193P	3	2	3-1/2
W194 / W194P	4	1-7/8	4

Combined with loose nut, 1/8 bend provides a useful offset.

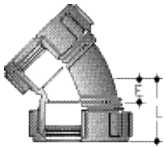

LABLINE AND PLENUMLINE FITTING DIMENSIONS

Loose Nut 1/8 Bend MJ X LN

Cat. No.	Size (in)	G (in)	H (in)	L (in)
W211 / W211P	1-1/2	1-3/4	5/8	1-3/8
W212 / W212P	2	1-3/4	5/8	1-11/16
W213 / W213P	3	4-1/8	2	3-1/2
W214 / W214P	4	4-1/2	1-3/4	4

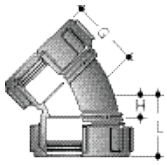

When used with W151 female adapter and screwed directly to sink, outlet provides a compact assembly for turning drainline back to wall.

Sanitary Tee

Cat. No.	Size (in)	G (in)	H (in)	E (in)	L (in)	M (in)
W201 / W201P	1-1/2	2-5/16	1-1/2	3-13/16	6	4-1/4
W202 / W202P	2	2-1/2	2	4-1/2	7	5-5/16
W203 / W203P	3	3-1/4	1-9/16	4-3/4	9	7-13/16
W204 / W204P	4	3-7/8	3	6-7/8	12-1/16	10

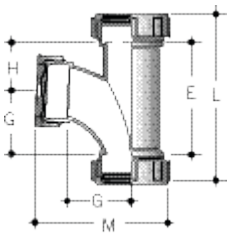

Reducing Sanitary Tee

Cat. No.	Size (in)	A (in)	B (in)	C (in)
W2021 / W2021P	2 x 1-1/2	3-13/16	4-1/16	2-1/2
W2031 / W2031P	3 x 1-1/2	4-3/4	5-1/2	3-1/4
W2032 / W2032P	3 x 2	4-3/4	5-1/2	3-1/4
W2041	4 x 1-1/2	6-7/8	7-11/16	3-7/8
W2042 / W2042P	4 x 2	6-7/8	7-3/8	3-7/8
W2043 / W2043P	4 x 3	6-7/8	6-3/4	3-7/8

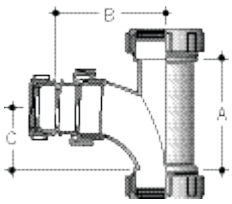

Cleanout Tee

Cat. No.	Size (in)	A (in)	B (in)	C (in)
W2015 / W2015P	1-1/2	2-5/16	1-1/2	3-13/16
W2025 / W2025P	2	2-1/2	2	4-1/2
W2035 / W2035P	3	3-1/4	1-9/16	4-3/4
W2045 / W2045P	4	3-7/8	3	6-7/8

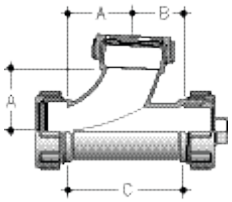

LABLINE AND PLENUMLINE FITTING DIMENSIONS

45° Wye

Cat. No.	Size (in)	E (in)	F (in)	G (in)	L (in)	M (in)
W371 / W371P	1-1/2	2-1/2	5/16	3-7/16	5-13/16	3-13/16
W372 / W372P	2	3	11/16	3-9/16	6-5/8	4-1/2
W373 / W373P	3	6	1-11/16	7	12-11/16	7-19/32
W374 / W374P	4	7	1-15/16	8-3/8	15-3/4	9-5/16

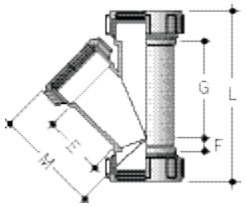

Combined with loose nut 1/8 bend can provide two parallel inlets to a single pipe.

Reducing 45° Wye

Cat. No.	Size (in)	A (in)	B (in)	C (in)
W3721 / W3721P	2 x 1-1/2	3-9/16	4-9/16	11/16
W3731 / W3731P	3 x 1-1/2	7	8-3/8	1-11/16
W3732 / W3732P	3 x 2	7	8-1/4	1-11/16
W3741	4 x 1-1/2	8-3/8	10-13/16	1-15/16
W3742 / W3742P	4 x 2	8-3/8	10-1/2	1-15/16
W3743 / W3743P	4 x 3	8-3/8	9-7/8	1-15/16

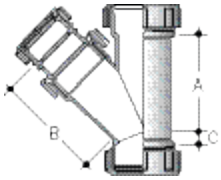

Combination Wye & 1/8 Bend

Cat. No.	Size (in)	A (in)	B (in)	C (in)	D (in)
W3715 / W3715P	1-1/2	3-7/16	3-5/8	3-11/16	5/16
W3725 / W3725P	2	3-9/16	4-1/4	4-1/16	11/16
W3735 / W3735P	3	7	8-1/2	8-13/32	1-11/16
W3745 / W3745P	4	8-3/8	10-1/4	10	1-15/16

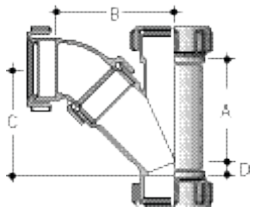

Red. Combination Wye & 1/8 Bend

Cat. No.	Size (in)	A (in)	B (in)	C (in)	D (in)
W37251 / W37251P	2 x 1-1/2	3-9/16	6-13/64	4-5/32	11/16
W37351 / W37351P	3 x 1-1/2	7	11-3/8	8-13/32	1-1/16
W37352 / W37352P	3 x 2	7	11-3/8	8-1/2	1-1/16
W37451	4 x 1-1/2	8-3/8	9-1/2	10-3/8	1-11/16
W37452 / W37452P	4 x 2	8-3/8	13-3/8	10	1-11/16
W37453 / W37453P	4 x 3	8-3/8	12-19/32	10	1-11/16

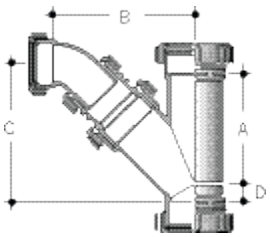

LABLINE AND PLENUMLINE FITTING DIMENSIONS

Double Wye

Cat. No.	Size (in)	E (in)	F (in)	G (in)	L (in)	M (in)
W381 / W381P*	1-1/2	2-1/2	5/16	3-7/16	5-13/16	3-15/16
W382 / W382P*	2	3	11/16	3-9/16	6-3/4	4-13/32
W383 / W383P*	3	6	1-11/16	7	12-11/16	7-19/32
W384 / W384P*	4	7	1-15/16	8-1/2	15-3/4	9-5/16

* fabricated

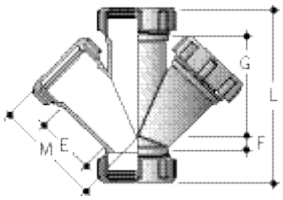

Reducing Double Wye

Cat. No.	Size (in)	A (in)	B (in) MAX	C (in)
W3821 / W3821P	2 x 1-1/2	3-9/16	4-9/16	11/16
W3831 / W3831P	3 x 1-1/2	7	8-3/8	1-11/16
W3832 / W3832P	3 x 2	7	8-1/4	1-11/16
W3841 / W3841P	4 x 1-1/2	8-1/2	10-13/16	1-15/16
W3842 / W3842P	4 x 2	8-1/2	10-1/2	1-15/16
W3843 / W3843P	4 x 3	8-1/2	9-7/8	1-15/16

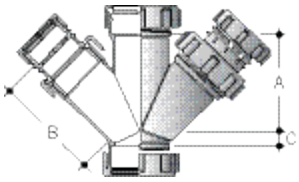

Double Wye & 1/8 Bend

Cat. No.	Size (in)	A (in)	B (in)	C (in)	D (in)
W3815 / W3815P	1-1/2	3-7/16	3-19/32	3-11/16	5/16
W3825 / W3825P	2	3-9/16	4-1/4	4-1/16	11/16
W3835 / W3835P	3	7	8-1/2	8-13/32	1-11/16
W3845 / W3845P	4	8-1/2	10-1/4	10	1-15/16

Ends may be reduced by adding reducing couplings.

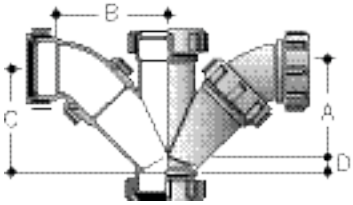

Reducing Double Wye & 1/8 Bend

Cat. No.	Size (in)	A (in)	B (in)	C (in) MAX	D (in)
W38251	2 x 1-1/2	3-9/16	5-1/2	5-7/8	11/16
W38351	3 x 1-1/2	7	7-5/8	11-1/8	1-11/16
W38352	3 x 2	7	7-7/8	8-7/8	1-11/16
W38451	4 x 1-1/2	8-1/2	9-1/4	10-1/2	1-15/16
W38452	4 x 2	8-1/2	9-1/4	10-3/8	1-15/16
W38453	4 x 3	8-1/2	11-5/8	14-5/8	1-15/16

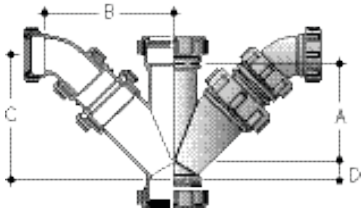

LABLINE AND PLENUMLINE FITTING DIMENSIONS

Reducing Coupling

Cat. No.	Size (in)	F (in)	L (in)
W3921 / W3921P	2 x 1-1/2	1-9/16	2-13/16
W3931* / W3931P	3 x 1-1/2	2-3/8	3-15/32
W3932* / W3932P	3 x 2	2-1/4	3-5/16
W3941*	4 x 1-1/2	3-13/16	4-3/4
W3942* / W3942P	4 x 2	3-1/2	4-9/16
W3943 / W3943P	4 x 3	2-7/8	4-7/8

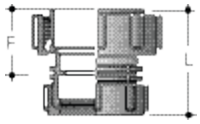

*Loose nut not included.
Loose nut permits direct connection to any Enfield fitting to provide reduction of pipe size.

Threaded Adapters Male Thread x Female Thread

Cat. No.	Size (in)	E (in)	L (in)
W121	1-1/2 x 1-1/4	1-3/16	1-7/8
W131	1-1/2 x 1-1/2	1-3/16	1-7/8

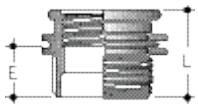

These fittings adapt Enfield Universal Traps to other brands of threaded 1-1/4" and 1-1/2" sink outlets.

Male Adapter MJ x Male Thread

Cat. No.	Size (in)	E (in)	L (in)
W141T / W141P	1-1/2	1/4	3/4
W142 / W142P	2	1/4	7/8
W143	3	1/4	1-11/16
W144	4	1/4	2-7/32

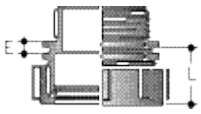

W141T adapts Enfield Universal Trap inlet to pipe.

Female Adapter MJ x Female Thread

Cat. No.	Size (in)	Z (in)	L (in)
W151 / W151P	1-1/2	1/8	2
W152 / W151P	2	1/8	2-5/16

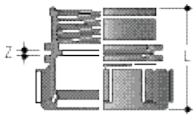

LABLINE AND PLENUMLINE FITTING DIMENSIONS

Glass Adapter MJ x Bead

Cat. No.	Size (in)	E (in)	L (in)
W451	1-1/2	1-1/8	1-7/8
W452	2	1-1/4	2-1/4
W453	3	1-3/4	3-9/32
W454	4	1-3/4	3-3/4

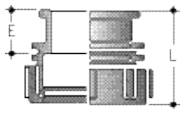

Duriron Adapter MJ x Spigot

Cat. No.	Size (in)	E (in)	L (in)
W461	1-1/2	1-9/32	2-3/16
W462	2	1-5/16	2-3/16
W463	3	1-3/4	3-1/2
W464	4	1-3/4	4

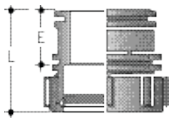

Cleanout Plug

Cat. No.	Size (in)
W241 / W241P	1-1/2
W242 / W242P	2
W243 / W243P	3
W244 / W244P	4

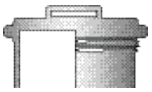

Molded with integral sealing surface, and is locked into fittings using standard nut. Also used as test plug.

Fabricated Cap

Cat. No.	Size (in)	E (in)	L (in)
W641P	1-1/2	5/8	1-3/4
W642P	2	1/2	1-3/4
W643P	3	5/8	2-3/4
W644P	4	3/4	3-1/2

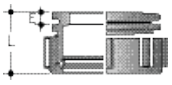

Fabricated Flanges

Cat. No.	Size (in)	A (in)	B (in)	C (in)	D (in)	M (in)
W361P	1-1/2	3-7/8	5	3/4	1-1/2	9/16
W362P	2	4-3/4	5-15/16	3/4	1-5/8	11/16
W363P	3	6	7-7/16	3/4	2-1/8	11/16
W364P	4	7-1/2	9	3/4	2-1/8	11/16

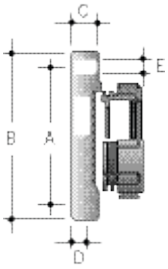

LABLINE AND PLENUMLINE FITTING DIMENSIONS

Vent Loop / **U Bend**

Cat. No.	Size (in)	E (in)	F (in)	L (in)	M (in)
W1011 / W1011P	1-1/2	2-9/16	3-1/2	5-3/4	3-11/32
W1012 / W1012P	2	2-7/8	4-3/16	6-13/16	3-7/8

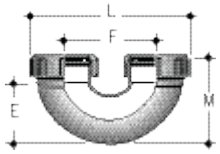

P Trap 2-piece

Cat. No.	Size (in)	A (in)	B (in)	C (in)
W1021 / W1021P	1-1/2	5-7/8	5-3/8	2-9/16
W1022 / W1022P	2	6-15/16	6-3/4	2-7/8

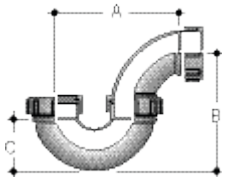

Configuration may be changed to suit by simply pivoting the ell.

P Trap 3-piece

Cat. No.	Size (in)	A (in)	B (in)	C (in)
WT11 / WT11P	1-1/2	8	6-13/16	3-1/2
WT12 / WT12P	2	9-1/4	8	4-1/4
WT13 / WT13P	3	12	11	6
WT14 / WT14P	4	15-9/16	15-7/8	7-13/16

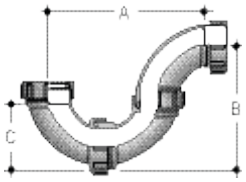

S Trap 3-piece

Cat. No.	Size (in)	A (in)	B (in)	C (in)
W1031	1-1/2	9-1/4	3-1/8	2-1/2
W1032	2	10-3/4	3-13/16	2-7/8

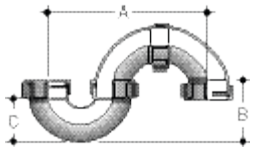

LABLINE AND PLENUMLINE FITTING DIMENSIONS

Running Trap 3-piece

Cat. No.	Size (in)	A (in)	B (in)
W1041 / W1041P	1-1/2	7-7/8	5-3/8
W1042 / W1042P	2	9-1/8	6-3/4

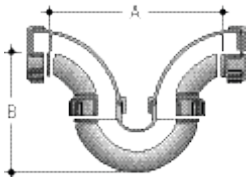

Universal Trap

Type	Cat. No.	Size (in)	D (in)	E (in)	F (in)
"P"	W501	1-1/2	3-3/8	2-5/16	5-9/16
"P"	W511*	1-1/2	3-3/8	2-3/8	6-3/8

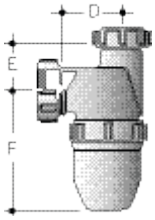

P-type

Type	Cat. No.	Size (in)	A (in)	B (in)	C (in)
"S"	W5015	1-1/2	1-1/2	4-5/8	5-1/2
"S"	W5115*	1-1/2	1-1/2	4-5/8	

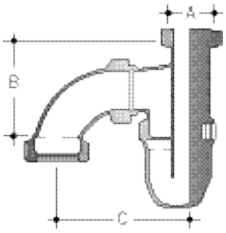

S-type

* Clear Base made from TPX (Methylpentene Copolymer)

Note: Three inch deep seal Universal Traps have 1-1/2" female threaded inlet which connects directly to Enfield cup sinks and sink outlets or can be adapted to other brands by means of adapters W121 and W131. All universal traps contain nitrile gaskets. Other special chemical resistance gaskets are available upon request.

*Universal traps are Anti-Siphon design.

Sink Outlets & Standing Waste

Cat. No.	Size (in)	A (in)	*B (in)	C (in)
W301 (outlet)	1-1/2	3-3/4	4	1/8
W311 (outlet)	1-1/2	2-7/8	4	1/8
W321 (standing waste tube)	1-1/2 x 7	–	–	–

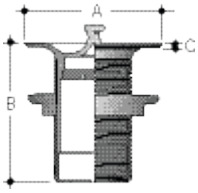

Sink outlets include integral strainer and removable plug.
Overflows like sink outlets are available in black.

LABLINE AND PLENUMLINE FITTING DIMENSIONS

Cup Sink – Round

Cat. No.	Size (in)	A (in)	B (in)	C (in)	D (in)
W401	6 x 4 deep	6-1/2	6-1/2	5/16	4
W402	4 x 4 deep	4-1/16	5-9/32	5/32	2-11/16

Round cup sink with 1-1/2" outlet is only available in black.

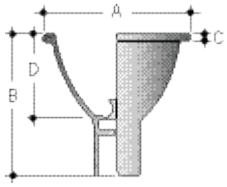

Cup Sink – Oval

Cat. No.	Size (in)	A (in)	B (in)	C (in)	D (in)	E (in)	F (in)	G (in)
W497	6 x 3 deep	7-1/16	5-7/8	1/4	4-1/4	8-1/2	4	2-7/8

Cat. No.	Size (in)	A (in)	B (in)	C (in)	D (in)	E (in)	F (in)	G (in)
W498	9 x 3 deep	10-3/8	9	1/4	5-1/4	8-15/16	4-7/16	2-15/16

Oval cup sink with 1-1/2" outlet is only available in black.

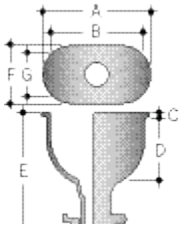

ACCESSORIES

Dilution Traps

Cat. No.	Size (in)	A (in)	B (in)	C (in)	D (in)	E (in)	F (in)	G (in)	H (in)	I (in)	J (in)	K (in)	L (in)
W601	1-1/2	9	4	12-1/2	12-3/8	9-5/8	6-5/8	4-3/4	14	6-5/8	4-3/8	16	9-3/4
upon request	2	9	4	12-1/2	12-3/8	9-5/8	6-5/8	4-3/4	14-3/8	6-5/8	4-3/8	17	9-7/8

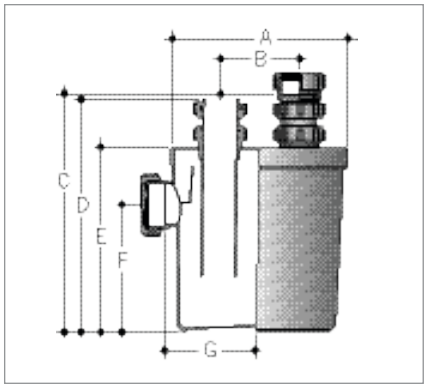

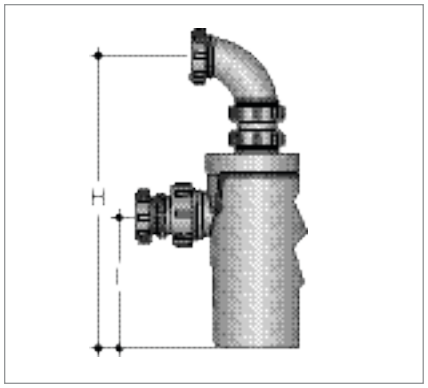

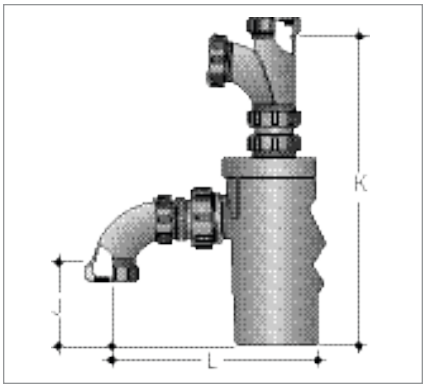

Note: Dilution traps should not be used as neutralization tanks.

Tailpiece Adapter Brass Compression Nut

Cat. No.	Size (in)	A (in)	B (in)
W303	1-1/2	3	1.7
W3012 / W3012P	1-1/2	12	1.7

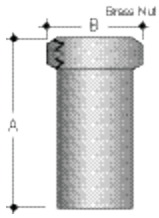

Swivel Sink Strainer Adapter

Cat. No.	Size (in)	A (in)	B (in)
W551	1-1/2	1-5/8	2-1/4
W5512	1-1/2	12	2-1/4

* Viton gasket

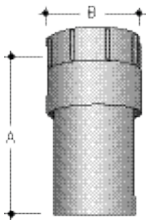

ACCESSORIES

Pipe Clip

Cat. No.	Size (in)	A (in)	B (in)
W251	1-1/2	1-5/8	2-3/8
W252	2	1-3/4	3-3/3

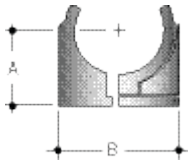

This "snap-in" type clip permits thermal movement of the pipe.
It is installed using a single screw or bolt.

Elastolive™ / Nut

Elastolive* Cat. No.	Size (in)	Nut Cat. No.	Size (in)
W221NH / W221NHP	1-1/2	W231 / W231P	1-1/2
W222NH / W222NHP	2	W232 / W232P	2
W223NH / W223NHP	3	W233 / W233P	3
W224NH / W224NHP	4	W234 / W234P	4

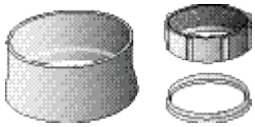

* No-heat olive.

Grooving Tool

Cat. No.	Size (in)
W261	1-1/2
W262	2
W263	3
W264	4

3" and 4" grooving tools have integral handles which facilitate efficient and easy groove cutting.

Spanner

Spanner only Cat. No.	Grooving/Spanner Wrench Set Cat. No.	Size (in)
W2611	W261CS	1-1/2
W2622	W262CS	2
W2633	W263CS	3
W2644	W264CS	4

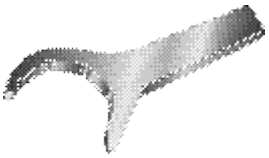

Spanners are supplied with each grooving tool, but can also be purchased separately.

Spanner for Brass Plug

Cat. No.	Size (in)
W2611	1-1/2
W2622	2
W2633	3
W2644	4

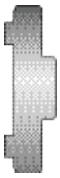

FLOWAY™ POLYPROPYLENE DRAIN DIMENSIONS – ADJUSTABLE

SPECIFICATION: Floway series F1000 polypropylene adjustable floor drain with 6" diameter strainer and plain end outlet. Body with 14-1/2" diameter flange, and non-puncturing style flashing collar with weep holes.

SERIES F1000 ADJUSTABLE FLOOR DRAIN

Cat. No.	Outlet Size (in)	A (in)	Wgt (lbs)
F1201	*2	10-5/8	3.2
F1301P	3	7	2.7
F1401P	4	7	2.8
F1601P	6	7	3.1

All drains are minimum 3" diameter.
* For 2" drains, use the appropriate Enfield or Labline reducer.

OPTIONS

- Allenhead vandal-proof screws
- Male iron pipe thread outlet

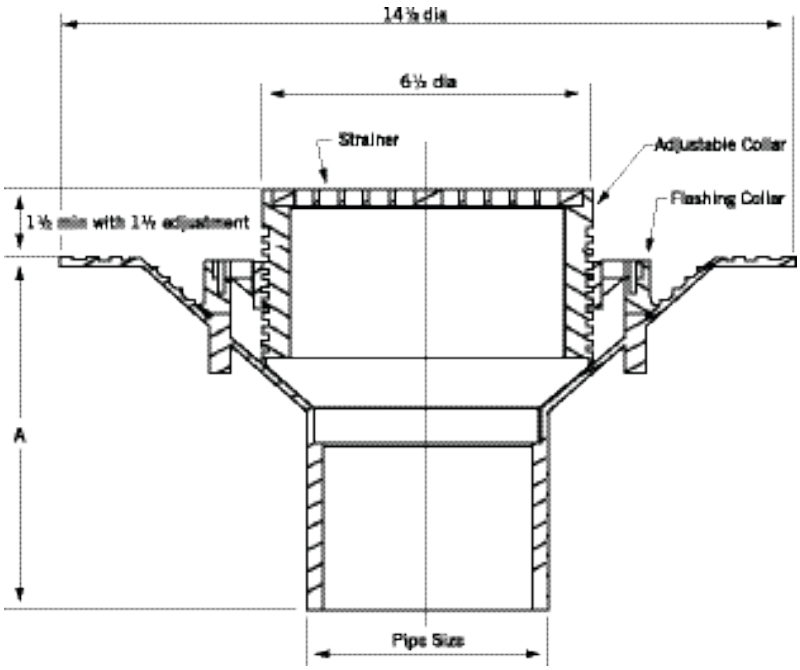

SPECIFICATION: Floway series F1000 polypropylene adjustable floor drain with 6" diameter strainer, sediment basket, and plain end outlet. Body with 14-1/2" diameter flange, and non-puncturing style flashing collar with weep holes.

SERIES F1000 ADJUSTABLE FLOOR DRAIN WITH SEDIMENT BASKET

Cat. No.	Outlet Size (in)	A (in)	Wgt (lbs)
F1202	*2	10-5/8	3.2
F1302P	3	7	2.7
F1402P	4	7	2.8
F1602P	6	7	3.1

All drains are minimum 3" diameter.
* For 2" drains, use the appropriate Enfield or Labline reducer.

OPTIONS

- Allenhead vandal-proof screws
- Male iron pipe thread outlet

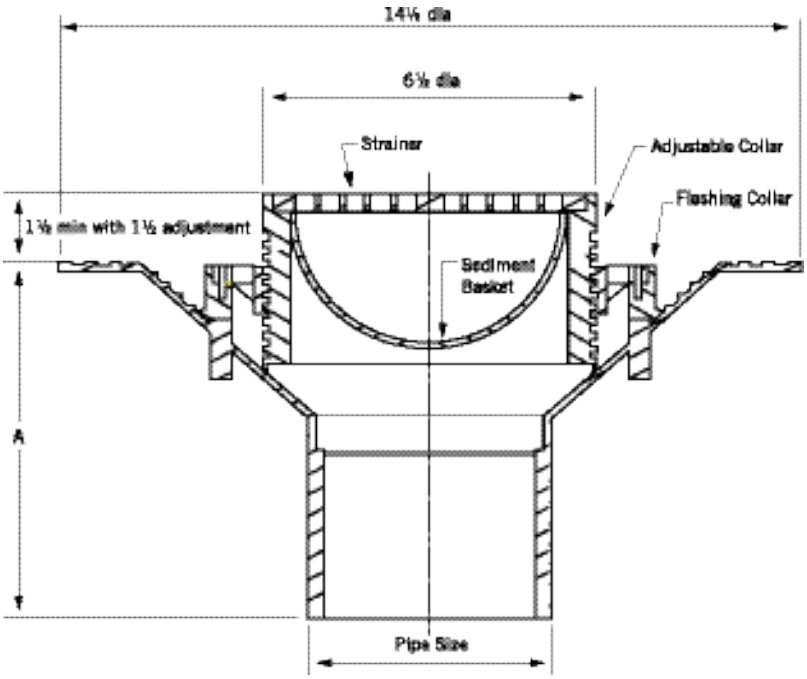

FLOWAY™ POLYPROPYLENE DRAIN DIMENSIONS – ADJUSTABLE

SPECIFICATION: Floway series F1000 polypropylene adjustable floor drain with 6" diameter strainer, sediment basket, 6" diameter funnel and plain end outlet. Body with 14-1/2" diameter flange, and non-puncturing style flashing collar with weep holes.

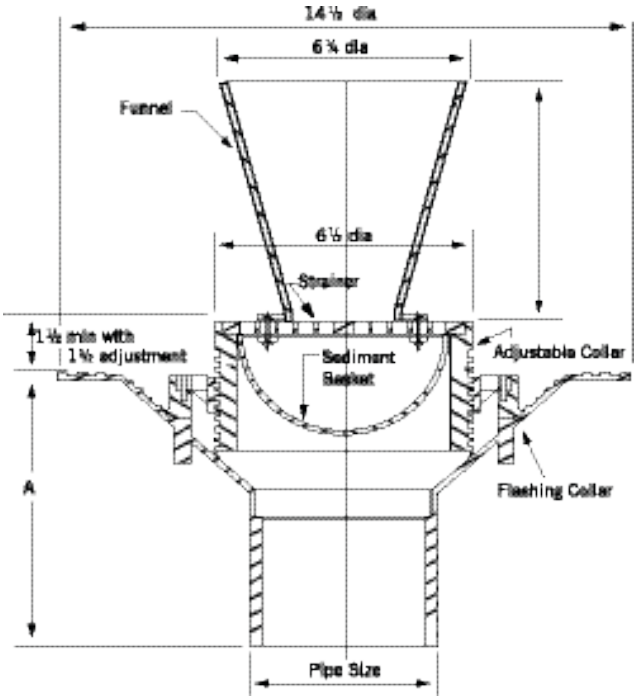

SERIES F1000 ADJUSTABLE FLOOR DRAIN WITH SEDIMENT BASKET AND 6" ROUND FUNNEL

Cat. No.	Outlet Size (in)	A (in)	Wgt (lbs)
F1203	*2	10-5/8	3.2
F1303P	3	7	2.7
F1403P	4	7	2.8
F1603P	6	7	3.1

All drains are minimum 3" diameter.
* For 2" drains, use the appropriate Enfield or Labline reducer.

OPTIONS

- Allenhead vandal-proof screws
- Male iron pipe thread outlet

SPECIFICATION: Floway series F1000 polypropylene adjustable floor drain with 6" diameter strainer, 6" diameter funnel and plain end outlet. Body with 14-1/2" diameter flange, and non-puncturing style flashing collar with weep holes.

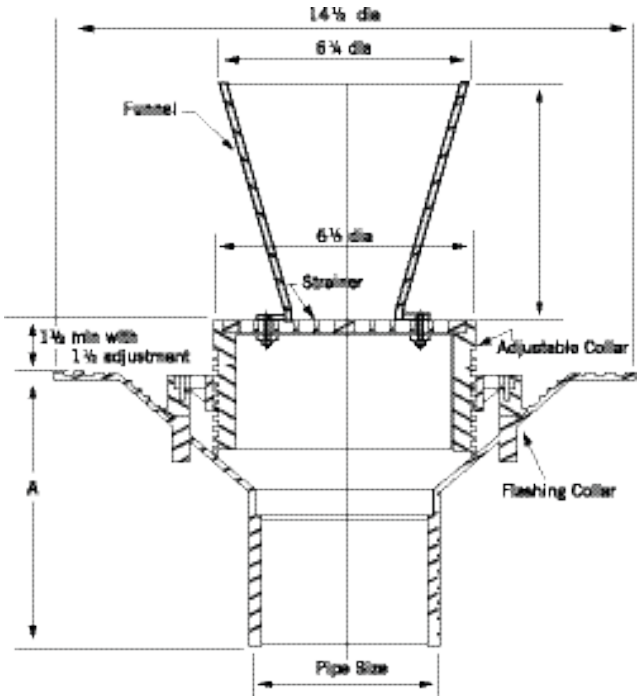

SERIES F1000 ADJUSTABLE FLOOR DRAIN WITH 6" ROUND FUNNEL

Cat. No.	Outlet Size (in)	A (in)	Wgt (lbs)
F1204	*2	10-5/8	3.2
F1304P	3	7	2.7
F1404P	4	7	2.8
F1604P	6	7	3.1

All drains are minimum 3" diameter.
* For 2" drains, use the appropriate Enfield or Labline reducer.

OPTIONS

- Allenhead vandal-proof screws
- Male iron pipe thread outlet

FLOWAY™ POLYPROPYLENE DRAIN DIMENSIONS – NON-ADJUSTABLE

SPECIFICATION: Floway series F4000 polypropylene non-adjustable floor drain with 8-1/2" diameter strainer and plain end outlet. Body with 14-1/2" diameter flange, and non-puncturing style flashing collar with weep holes.

SERIES F4000 NON-ADJUSTABLE FLOOR DRAIN

Cat. No.	Outlet Size (in)	A (in)	Wgt (lbs)
F4201	*2	10-5/8	2.8
F4301P	3	7	2.3
F4401P	4	7	2.5
F4601P	6	7	2.7

All drains are minimum 3" diameter.
* For 2" drains, use the appropriate Enfield or Labline reducer.

OPTIONS

- Allenhead vandal-proof screws
- Male iron pipe thread outlet

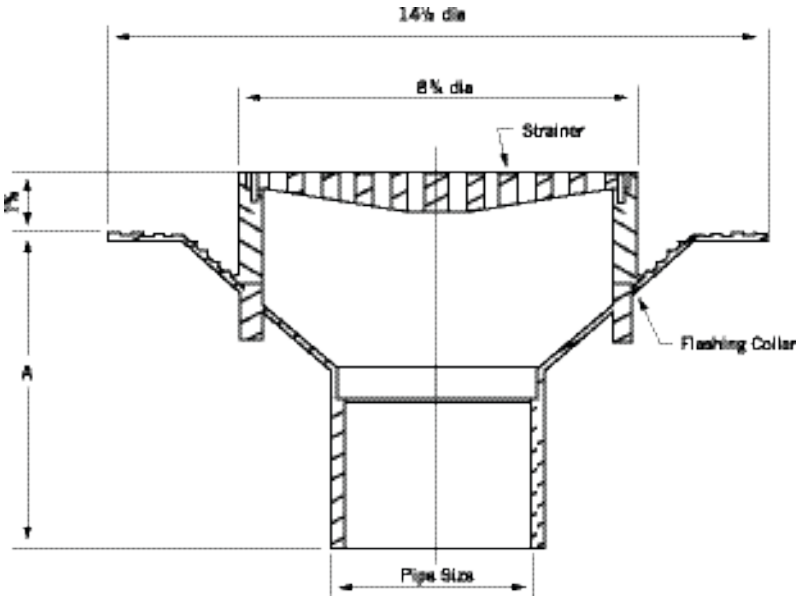

SPECIFICATION: Floway series F4000 polypropylene non-adjustable floor drain with 8-1/2" diameter strainer, sediment basket, and plain end outlet. Body with 14-1/2" diameter flange, and non-puncturing style flashing collar with weep holes.

SERIES F4000 NON-ADJUSTABLE FLOOR DRAIN WITH SEDIMENT BASKET

Cat. No.	Outlet Size (in)	A (in)	Wgt (lbs)
F4202	*2	10-5/8	2.8
F4302P	3	7	2.3
F4402P	4	7	2.5
F4602P	6	7	2.7

All drains are minimum 3" diameter.
* For 2" drains, use the appropriate Enfield or Labline reducer.

OPTIONS

- Allenhead vandal-proof screws
- Male iron pipe thread outlet

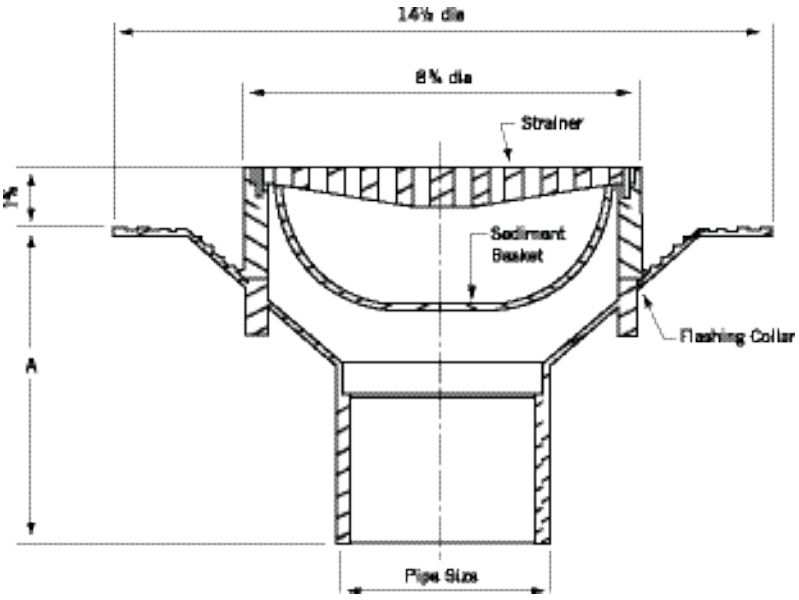

FLOWAY™ POLYPROPYLENE DRAIN DIMENSIONS – NON-ADJUSTABLE

SPECIFICATION: Floway series F4000 polypropylene non-adjustable floor drain with 8-1/2" diameter strainer, sediment basket, 6" diameter funnel and plain end outlet. Body with 14-1/2" diameter flange, and non-puncturing style flashing collar with weep holes.

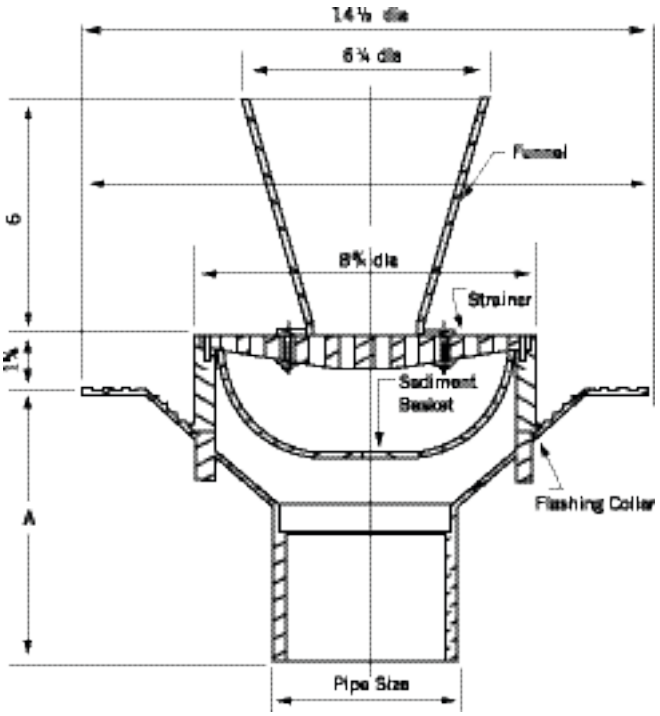

SERIES F4000 NON-ADJUSTABLE FLOOR DRAIN WITH SEDIMENT BASKET AND FUNNEL

Cat. No.	Outlet Size (in)	A (in)	Wgt (lbs)
F4203	*2	10-5/8	2.8
F4303P	3	7	2.3
F4403P	4	7	2.5
F4603P	6	7	2.7

All drains are minimum 3" diameter.
* For 2" drains, use the appropriate Enfield or Labline reducer.

OPTIONS

- Allenhead vandal-proof screws
- Male iron pipe thread outlet

SPECIFICATION: Floway series F4000 polypropylene non-adjustable floor drain with 8-1/2" diameter strainer, 6" diameter funnel and plain end outlet. Body with 14-1/2" diameter flange, and non-puncturing style flashing collar with weep holes.

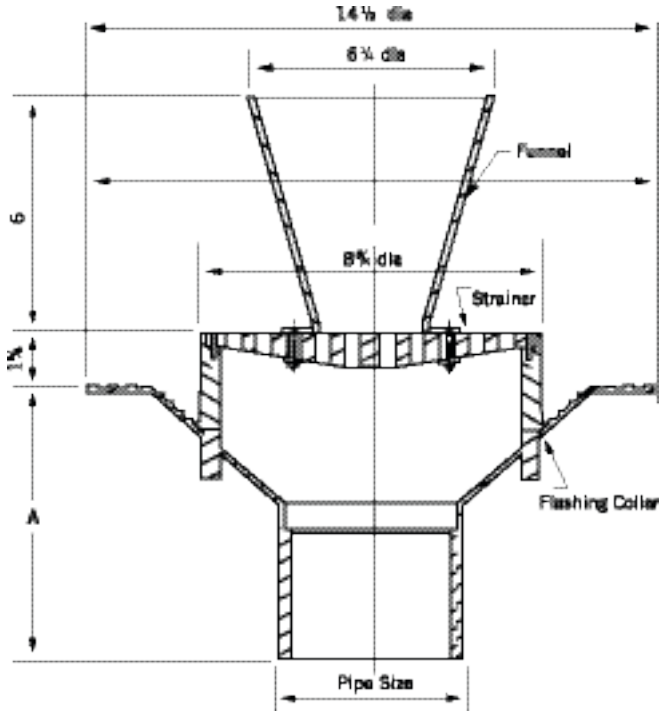

SERIES F4000 NON-ADJUSTABLE FLOOR DRAIN WITH FUNNEL

Cat. No.	Outlet Size (in)	A (in)	Wgt (lbs)
F4204	*2	10-5/8	2.8
F4304P	3	7	2.3
F4404P	4	7	2.5
F4604P	6	7	2.7

All drains are minimum 3" diameter.
* For 2" drains, use the appropriate Enfield or Labline reducer.

OPTIONS

- Allenhead vandal-proof screws
- Male iron pipe thread outlet

FLOWAY™ ADJUSTABLE ACID WASTE CLEANOUT WITH NICKEL-BRONZE COVER

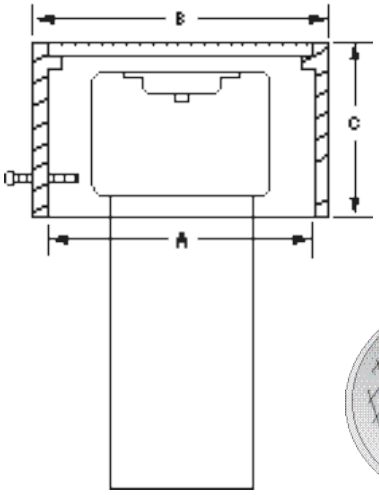

Cover Plate Dimensions

A (in)	B (in)	C (in)	D (in)
8-5/8	9-1/8	2-3/4	7-1/4

FEATURES:

- Available in 2", 3", 4" and *6" pipe outlet
- 12" long stub of Schedule 40 FRPP pipe
- Nickel-bronze cover plate
- Rated to 2400lb load limit
- "AWCO" designation stamped on cover
- FRPP cleanout plug inside of cover
- For use with Enfield or Labline systems

* 4" cleanout with 6" pipe outlet.

FLOWAY™ POLYPROPYLENE DRAIN OPERATIONAL NOTES

Test	Test Standard	Conditions	Unit	Safe Load
Static Load Test (a)	Adjustable	72°F / full face loading	lbf	2750
Static Load Test (a)	Non-Adjustable	72°F / full face loading	lbf	11000

The maximum safe live load was calculated by dividing the load at failure by two.

Note:

i. The press test simulates (under laboratory conditions) the resistance to buckling of floor drains under given loadings and surface area considerations.

ii. It is not meant to simulate every type of wheel design loading as this will vary according to the equipment supplier.

iii. The larger the wheel diameter, the more likely it is that the full face loading result can be used as an indication of resistance to load.

iv. Polypropylene will normally recover to near its original dimensions after the load is removed.

STANDARD BOLT PATTERN AND DIMENSIONS

ANSI B16.5

Size (in)	Bolt Diameter (in)	Bolt Length (in)	Torque (ft lb)	# of Bolt Holes
1-1/2	1/2	2-1/2	13	4
2	5/8	2-1/2	22	4
3	5/8	2-1/2	30	4
4	5/8	2-3/4	33	8
6	3/4	3-1/2	33 – 50	8
8	3/4	4	33 – 50	8
10	7/8	5	53 – 75	12
12	7/8	5-1/2	53 – 75	12

Flange Bolt Tightening Sequence

Tighten bolts equally following numerical sequence.

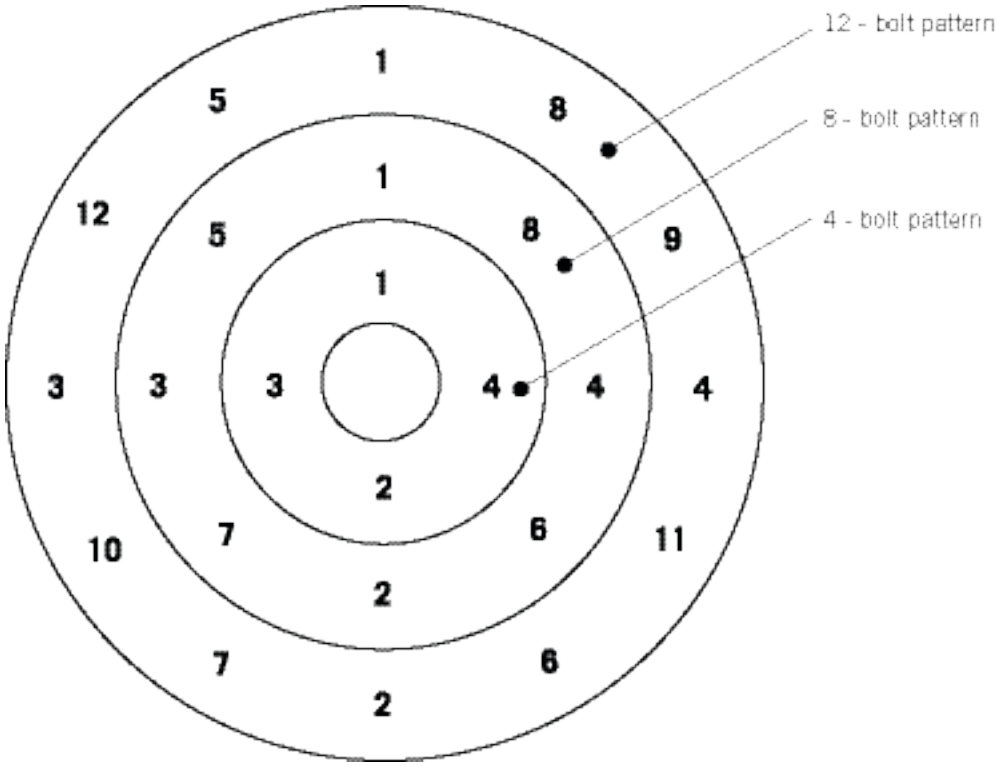

EXPANSION AND CONTRACTION

All piping products expand and contract with changes in temperature. Linear expansion and contraction of any pipe on the longitudinal axis relates to the coefficient of thermal expansion (e) for the specific material used in the manufacturing of the product. Variation in pipe length due to thermal expansion or contraction depends on the linear expansion factor (Y) and the variation in temperature (ΔT). It should be noted that change in pipe diameter or wall thickness does not effect a change in rates of thermal expansion or contraction.

In general, acid waste piping systems are not normally subjected to large temperature variations. Inherent flexibility of the system is usually sufficient to accommodate anticipated expansion or contraction. However, consideration must be given in situations where substantial temperature variations may exist.

Approximate coefficients of thermal expansion for different pipe materials are presented below.

Coefficient of Thermal Expansion

Piping Material	"e" Coefficient in/in/°F	"Y" Expansion Factor in/10°F/100 ft
FRPP	5.67×10^{-5}	.680
NFRPP	6.62×10^{-5}	.795
FR-PVDF	8.0×10^{-5}	.960

The degree of thermal expansion or contraction also depends on the system temperature differential, as well as the length of pipe run between changes in direction. It can be calculated using the following formula:

$$\Delta L = Y \frac{(T - F)}{10} \times \frac{L}{100}$$

where: ΔL = expansion rate (in)

Y = expansion factor expressed in inches of expansion per 10°F temperature change per 100 ft. of pipe

T = maximum temperature (°F)

F = minimum temperature (°F)

L = length of pipe run (ft)

Note: Remember to allow for contraction when piping is to be exposed to temperatures substantially below installation temperature.

Example 1:

How much expansion can be expected in 215 feet of 3" diameter FRPP pipe installed at 75°F and operating at 135°F?

Y = 0.680

Solution:

$$\Delta L = 0.680 \times \frac{60}{10} \times \frac{215}{100} = 0.680 \times 6 \times 2.15 = 8.77 \text{ inches}$$

Thermal Expansion (ΔL) in inches of FRPP (0.68)

Temp. Change T °F	Length of Run in Feet									
	10	20	30	40	50	60	70	80	90	100
10	0.07	0.14	0.20	0.27	0.34	0.41	0.48	0.54	0.61	0.68
20	0.14	0.27	0.41	0.54	0.68	0.82	0.95	1.09	1.22	1.36
30	0.20	0.41	0.61	0.82	1.02	1.22	1.43	1.63	1.84	2.04
40	0.27	0.54	0.82	1.09	1.36	1.63	1.90	2.18	2.45	2.72
50	0.34	0.68	1.02	1.36	1.70	2.04	2.38	2.72	3.06	3.40
60	0.41	0.82	1.22	1.63	2.04	2.45	2.86	3.26	3.67	4.08
70	0.48	0.95	1.43	1.90	2.38	2.86	3.33	3.81	4.28	4.76
80	0.54	1.09	1.63	2.18	2.72	3.26	3.81	4.35	4.90	5.44
90	0.61	1.22	1.84	2.45	3.06	3.67	4.28	4.90	5.51	6.12
100	0.68	1.36	2.04	2.72	3.40	4.08	4.76	5.44	6.12	6.80

Thermal Expansion (ΔL) in inches of NFRPP (0.795)

Temp. Change T °F	Length of Run in Feet									
	10	20	30	40	50	60	70	80	90	100
10	0.08	0.16	0.24	0.32	0.40	0.48	0.56	0.64	0.72	0.80
20	0.16	0.32	0.48	0.64	0.80	0.95	1.11	1.27	1.43	1.59
30	0.24	0.48	0.72	0.95	1.19	1.43	1.67	1.91	2.15	2.39
40	0.32	0.64	0.95	1.27	1.59	1.91	2.23	2.54	2.86	3.18
50	0.40	0.80	1.19	1.59	1.99	2.39	2.78	3.18	3.58	3.98
60	0.48	0.95	1.43	1.91	2.39	2.86	3.34	3.82	4.29	4.77
70	0.56	1.11	1.67	2.23	2.78	3.34	3.90	4.45	5.01	5.57
80	0.64	1.27	1.91	2.54	3.18	3.82	4.45	5.09	5.72	6.36
90	0.72	1.43	2.15	2.86	3.58	4.29	5.01	5.72	6.44	7.16
100	0.80	1.59	2.39	3.18	3.98	4.77	5.57	6.36	7.16	7.95

Thermal Expansion (ΔL) in inches of FR-PVDF

Temp. Change T °F	Length of Run in Feet									
	10	20	30	40	50	60	70	80	90	100
10	0.10	0.19	0.29	0.38	0.48	0.58	0.67	0.77	0.86	0.96
20	0.19	0.38	0.58	0.77	0.96	1.15	1.34	1.54	1.73	1.92
30	0.29	0.58	0.86	1.15	1.44	1.73	2.02	2.30	2.59	2.88
40	0.38	0.77	1.15	1.54	1.92	2.30	2.69	3.07	3.46	3.84
50	0.48	0.96	1.44	1.92	2.40	2.88	3.36	3.84	4.32	4.80
60	0.58	1.15	1.73	2.30	2.88	3.46	4.03	4.61	5.18	5.76
70	0.67	1.34	2.02	2.69	3.36	4.03	4.70	5.38	6.05	6.72
80	0.77	1.54	2.30	3.07	3.84	4.61	5.38	6.14	6.91	7.68
90	0.86	1.73	2.59	3.46	4.32	5.18	6.05	6.91	7.78	8.64
100	0.96	1.92	2.88	3.84	4.80	5.76	6.72	7.68	8.64	9.60

Thermal Movement

There are options to accommodate expansion and contraction in acid waste systems.

They are:

- Expansion Offsets
- Expansion Joints

Expansion Offset

Flame retardant polypropylene expands at a unit rate of 0.720 in. per 10°F (-6.5°C) change per 100 ft of pipe. This can be accommodated by using the flexibility of polypropylene pipe at changes in pipe direction. Install the system free of strain using loose fitting pipe clips allowing the pipe to float.

When total temperature change is less than 30°F (17°C), special provisions for accommodating thermal expansion are not generally required, especially when the line includes several directional changes and thus provides considerable inherent flexibility.

Expansion Joints

Enfield Polypropylene pipe systems are installed in several different climates across North America. As a result, these systems must contend with expansion and contraction brought about by temperature change. To overcome this problem and avoid possible damage to the installation, Enfield Expansion Joints are specifically designed to eliminate the stresses and strains caused by thermal movement.

When an expansion joint is installed, care should be taken in the fixing of the pipe to ensure an accurate linear "thrust and pull" movement. Any pipe clamp should allow the pipe to slide freely. The housing of the expansion joint on the other hand should always be firmly anchored to allow the sliding member to accept any movement.

On stack installations, where expansion and contraction are a concern, an expansion joint should be installed at every floor level where the stack is connected. If there are no connections, an expansion joint should be installed at every second floor level.

In vertical applications, cut-off access must be designed to ensure hydrostatic test pressure does not exceed 4.33 psi. A common method to achieve this is to install a cleanout every 10 feet in the stack.

Correct "piston-in" and "piston-out" position at the time of installation is critical and can be calculated by the formula:

$$P = \frac{M - A}{T} \times L$$

where: P = "out" position of inner tube in inches

M = maximum temperature

A = installation temperature

T = total temperature change

L = length of traverse in expansion joint in inches

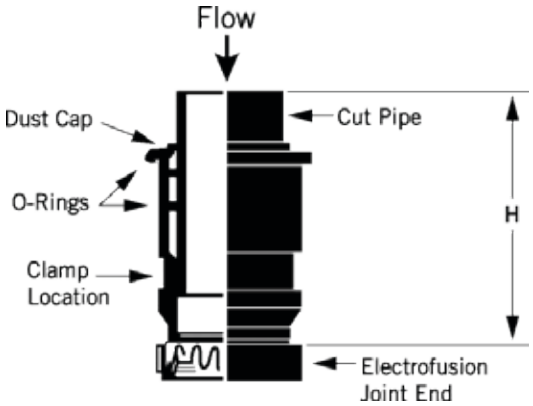

Example 2:

Assume that a pipeline will be installed in an unheated, exposed building with a metal roof where temperatures range from 10°F in the winter, to 110°F in the summer. If installation temperature is 70°F, the pipe will contract over a 60° temperature range during cold weather and will expand over a 40° temperature range during the summer. Consequently, three-fifths of the line movement will be on the contraction side or "piston-in" position, while the remainder will be expansion. The expansion joint provides for various lengths of movement. As a result, the inner tube should be pulled out approximately half of the total movement expected when the joint is installed.

Highest temperature expected: 110°F

Lowest temperature expected: 40°F

Total Change (ΔT): 70°F

Length of run: 100 feet

A 70°F ΔT on the Thermal Expansion chart (previous page) corresponds to a 4.76" change in length (ΔL).

Installing Expansion Joints

1. The direction of fluid flow through the expansion joint shall be from the dust cap end to the electrofusion or mechanical joint end. For example, if the expansion joint is being installed on a vertical system, the dust cap will be on the top.
2. Ensure the pipe and expansion joint are clean and free of debris.
3. The pipe is marked to show the maximum limit of travel.
4. Withdraw the pipe per the table below for the given temperature during installation.
5. Reinstall the dust cap on the expansion joint.
6. Securely anchor the expansion joint with a metal clamp. The diameter and the maximum width of the clamp are shown in the table below. See the anchor placement noted on the drawing. The expansion joint only becomes functional when it is securely mounted.

Expansion Joint Size (in)	Clamp Dia. (in)	Max. Clamp Width (in)	Fully Inserted H (in)	Total Max. Allowable Travel (in)
3	4.29	1.30	13.50	2.00
4	5.28	1.30	13.50	2.00
6	7.40	1.30	18.25	2.00

Temperature	Distance to Withdraw (in)
Less than 32°F	1-3/4
32 – 85°F	1-1/2
More than 85°F	1-1/4

SYSTEM SIZING

Manning Roughness Factor

Piping systems for drainage applications usually consist of minimal to half pipe capacity flow. These discharge systems are designed to be horizontal or slightly sloping. Friction loss for open channel flow can be determined by the Manning formula as follows:

$$V = \left(\frac{1.49}{n}\right) R^{2/3} S^{1/2}$$

where: V = the average velocity at a cross section (ft./sec.)

R = the hydraulic radius (ft.)

S = slope (ft./ft.)

n = the coefficient of roughness

The Manning formula is used for liquids in a steady flow at constant depth. Values of the coefficient n, determined by many tests on actual pipes, are given in the following table.

Average Values of the Manning Roughness Factor	
Material	Manning n
PP / PVDF	.009
Glazed surface	.010
Concrete	.013
Cast iron	.015
Corrugated metal	.022

The high carrying capacity of plastic piping often results in the use of flatter grades or in the use of smaller diameter pipe.

THERMAL CONDUCTIVITY

Compared to traditional pipe materials, the thermal conductivity of thermoplastic is low and acts as an insulator. This insulating property of plastic provides a distinct advantage over traditional materials to retard or prevent "sweating" or formation of condensation. The need for insulation may, in certain instances, be completely eliminated by using plastic. Thermal conductivity is expressed as BTU/hr./sq.ft./°F/in. where BTU/hr. or British Thermal Unit per hour is defined as energy required to raise the temperature of one pound of water (12 gallons x specific gravity) one Fahrenheit degree in one hour. Square feet refers to one square foot where heat is being transferred. Inch refers to one inch of pipe wall thickness. As pipe wall thickness increases, thermal conductivity decreases.

Material	BTU/hr./sq.ft./°F/in.
PP	1.2
PVDF	1.18 to 1.32
Glass	8
Cast Iron / Carbon Steel	360
Aluminum	1,000
Copper	2,700

The coefficients of thermal conductivity of some materials used in drainage piping are:

Copper, a good conductor of heat, will lose 2,700 BTU per hour per square foot of surface area with a wall thickness of 1" while PP will lose only 1.2 BTU/hr.

PIPE SUPPORTS AND SUPPORT SPACING

General Principles of Design and Support

Thermoplastics have very different mechanical and physical properties compared to metals. Special attention should be given to ways of dealing with their inherent higher thermal expansion rates and lower pipe stiffness.

If the principles used for design and support of metal pipe systems are applied directly to thermoplastic pipes, severe problems may arise. Therefore, all warranties are contingent upon adopting the following support procedures and recommendations.

Supporting Pipes

The high coefficient of thermal expansion of plastic compared with metals may result in considerable expansion and contraction of the pipe runs as the temperature changes.

The principle is to control expansion by restraining the pipe in the lateral direction while allowing free axial movement.

A hanger-type support does not provide lateral restraint to the pipe, but it does encourage snaking and should be avoided whenever possible.

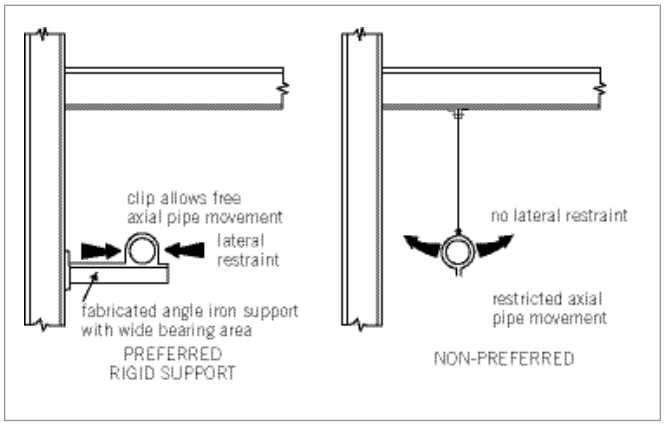

The diagram below illustrates preferred and non-preferred support arrangements.

In some cases, it may be physically impossible or impractical to install a rigid support in between two widely spaced columns. In this event hanger rods with loose fitting clips should be used.

The frequency of supports for plastic pipes is greater than for metal pipes. The recommended maximum distance between supports for pipes filled with water is given in the table (See Recommended Maximum Support Spacing) and applies to pipes and contents at the temperature stated.

Pipe supports should be installed so that the horizontal piping is in uniform alignment and with a uniform slope of at least 1/8" per foot, or in accordance with the local plumbing codes or authority having jurisdiction.

Calculation of Support Spacing

$$L = [(SL \times E \times I) / (1.302 \times Wt)]^{0.33}$$

or

$$L = [(16 \times I \times BSL) / (OD \times Wt)]^{0.5}$$

where:

L = Length between supports, 'Span Length', ft.

SL = Sag Limit, the maximum permitted vertical deflection allowed across a span, expressed as a percentage of the span length

E = Modulus of elasticity of the pipe material, psi

OD = Outside Diameter of the pipe, in.

BSL = Bending Stress Limit on a span of pipe under a given load, psi

I = Moment of Inertia, in^4
= $0.04909 \times (OD^4 - ID^4)$

Wt = Unit Weight, lb/in.
= $\frac{\pi}{4} \times [\delta\text{-pipe} \times (OD^2 - ID^2) + \delta\text{-fluid} \times ID^2]$

δ-pipe = Density of pipe material, lb/in^3

δ-fluid = Density of the fluid, lb/in^3

ID = Inside diameter of the pipe, in.

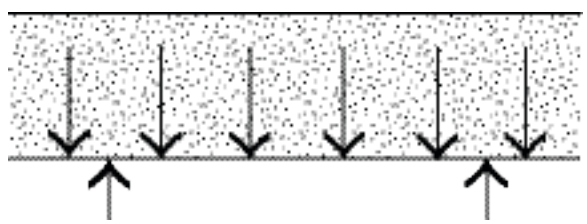

Load is uniformly distributed along the span length

Modulus of Elasticity (E)

PP	
Temperature (°F)	psi
73	200,000
90	130,000
110	97,000
140	74,000
170	61,000
200	55,000
210	53,000

PVDF	
Temperature (°F)	psi
-40°F (-40°C)	509,000
14°F (-10°C)	312,000
68°F (20°C)	245,000
122°F (50°C)	162,000
176°F (80°C)	86,000
212°F (100°C)	61,000

Recommended Maximum Support Spacing for PP (ft.)

Pipe Size (in)	Horizontal Pipe (ft)				Vertical Pipe (ft)
	73°F	110°F	170°F	210°F	
1-1/2	3.5	3.0	2.5	Continuous Support	10
2	4.0	3.0	2.5		10
3	5.0	4.0	3.5		10
4	6.0	4.5	4.0		10
6	7.5	5.5	5.0		10
8	8.5	6.5	5.5		10
10	9.5	7.5	6.5		10
12	10.5	8.0	7.0		10

Recommended Maximum Support Spacing for PVDF (ft.)

Pipe Size (in)	Horizontal Pipe (ft)				Vertical Pipe (ft)
	73°F	110°F	170°F	210°F	
1-1/2	3.5	3.0	2.5	2.5	10
2	4.0	3.0	2.5	2.5	10
3	5.0	4.0	3.5	3.5	10
4	6.0	4.5	4.0	4.5	10

Note 1: Support spacing based on sag limit of 0.2%
Note 2: Supports should permit free axial pipe movement at all temperatures and should provide adequate bearing support to the pipe. Supports should be free of sharp edges to prevent damaging the pipe.

Support Spacing Correction Factors

When the fluid has a specific gravity greater than water (1.0) the hanging distance of PP must be decreased by dividing the recommended support distance by the fluid's specific gravity.

For PVDF, use the correction factors in the table below.

Support Spacing Correction Factors – PVDF

Specific Gravity	Correction Factor
1.0	1.00
1.1	0.98
1.2	0.96
1.4	0.93
1.6	0.90
2.0	0.85
2.5	0.80

PIPE CLIPS AND HANGERS

Pipe Clips

All pipe clips should permit free axial pipe movement at all temperatures and should provide adequate bearing support to the pipe.

Pipe clips and supports should be free of sharp edges to prevent damaging the pipe.

Cobra Pipe Clips

Good installation of plastic piping is largely dependent on the types of support and pipe clips selected. Clips should not grip the pipe tightly; but allow free axial pipe movement as the pipe expands and contracts. Correctly placed anchors, expansion loops and free pipe lengths at changes in direction, can then control expansion, thereby avoiding unsightly pipe snaking.

The Cobra clip allows this free pipe movement by minimizing friction between pipe and clip.

Also, the Cobra clip has an efficient single point fixing, with a snap-in design that allows for rapid installation. Several Cobra clips can be fixed in place and full lengths of pipe snapped easily into position.

Locate

Insert pipe into the open Cobra clip until it seats on the open jaws.

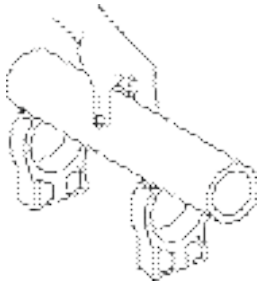

Snap In

Apply slight pressure to snap in pipe and force jaws to close and lock.

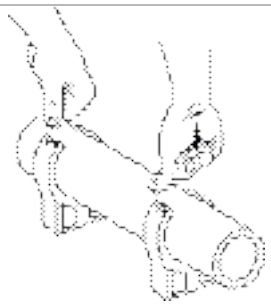

Retain

Fit retaining strap on clip sizes 1" and above.

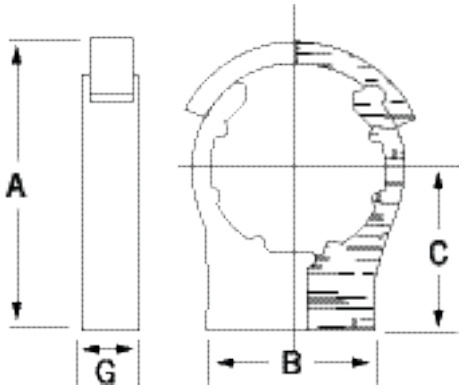

Size (in)	A	B	C	G	Screw / Bolt Size	Wgt (oz)
1*	-	1.57	1.57	0.69	#10 / 1/4 / M5	0.49
1-1/4*	-	1.77	1.77	0.79	#10 / 1/4 / M5	0.74
1-1/2*	3.35	1.97	1.97	0.83	#10 / 1/4 / M6	1.06
2*	4.02	2.36	2.36	0.83	#10 / 1/4 / M6	1.48
2-1/2*	4.80	2.76	2.76	1.22	5/16 / M8	3.31
3*	5.83	3.15	3.54	1.22	5/16 / M8	4.27
4*	6.18	3.54	3.77	1.37	5/16 / M8	5.23

1. Clips of size 1" and above are fitted with retaining strap.
2. Use machine, tapping or wood screws with flat or oval head. Use bolts to suit clip recess.

Recommended Pipe Hangers

Clamps used as anchors (such as U-bolts, etc.), if over-tightened, can produce a point-of-load stress on the pipe. This can result in cracking or premature burst failure. If U-bolts must be used, then a metal shield should be placed between the U-bolt and pipe surface. When anchoring plastic pipe, it is always desirable to spread the load over a wide area of contact.

Pipe Rings

Adj. Swivel Ring
Split Ring type
3/4" to 8" pipe

Split Ring
3/8" - 8" pipe

Adj. Ring
1/2" - 8" pipe

Adj. Swivel Ring
1/2" - 8" pipe

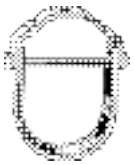

Adj. Clevis - Standard
1/2" - 30" pipe

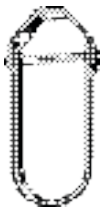

Adj. Clevis For Insulated Lines
3/4" - 12" pipe

Pipe Rolls

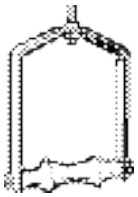

Adj. Steel Yoke Pipe Roll
2-1/2" - 20" pipe

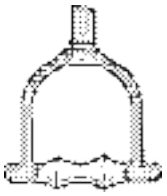

Adj. Swivel Pipe Roll
2-1/2" - 12" pipe

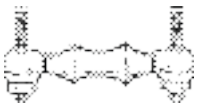

Single Pipe Roll
1" - 30" pipe

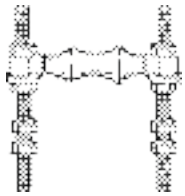

Adj. Pipe Roll Support
1" - 30" pipe

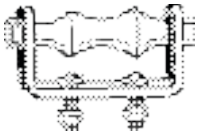

Roller Chair
2" - 12" pipe

Pipe Roll and Plate
2" - 24" pipe

Pipe Roll Stand Complete
2" - 42" pipe

Pipe Straps and Hooks

Wrought Strap Short
1/2" - 4" pipe

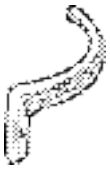

One Hole Clamp
3/8" - 4" pipe

Tin Strap
1/2" - 2" pipe

Pipe Clamps

Pipe Clamp Medium
1/2" - 24" pipe

Double Bolt Pipe Clamp
3/4" - 36" pipe

Pipe Covering

Insulation Protection Shield
1/2" - 24" pipe

Bolt

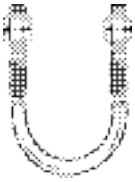

*Also available plastic coated.

U Bolt*
Standard: 1/2" - 30" pipe
Light Weight: 1/2" - 10" pipe

HANDLING AND STORAGE

Thermoplastics are strong, lightweight materials, about one fifth the weight of steel or cast iron. Piping made of this material is easily handled and, as a result, there is a tendency for it to be thrown about on the jobsite. Care should be taken in handling and storage to prevent damage to the pipe. Some general guidelines are as follows:

- If stored outdoors, best practice dictates that Enfield and Labline pipe and fittings be covered with a protective cover that is well ventilated. Ideally, pipe and fittings should always be stored inside a building or materials storage trailer.
- Make sure the pipe is adequately supported at all times. Avoid stacking pipe in large piles, since the pipe at the bottom may incur high loads. Store on level support to prevent sagging or bending.
- For long-term storage, use pipe racks to support the pipe continuously along its length. If this is not possible, supports of at least 3 in. bearing width, at spacings not greater than 3 ft centers, are recommended. Pipe should not be stored more than seven layers high. Sharp corners on metal racks should be avoided.
- Pipe is often supplied in crates. Take care when unloading crates, and avoid using metal slings or wire ropes. Crates may be stacked four high in the field.
- Exercise care while handling pipe. Damage may occur if pipe collides with sharp corners, or is dropped.
- Drainage applications require that the pipe lengths be installed with the required amount of pitch, or fall, to achieve proper drainage flow. Storing pipe in direct sunlight may result in development of bowing or curving within pipe lengths. Bowing or curving may impede the ability to correctly pitch the pipe to achieve proper drainage flow.
- Extra care should be taken when unloading and handling pipe in cold weather. The impact strenght for FRPP, NFRPP and FR-PVDF is reduced at lower temperatures. Dropping pipe from a truck or forklift may cause damage. Methods and techniques normally used in warm weather may not be acceptable at lower temperature range.

Prolonged Outdoor Exposure

Prolonged exposure of Enfield and labline FRPP and NFRPP to the direct rays of the sun will not damage the pipe material. However, some mild discoloration may take place in the form of a milky film on the exposed surfaces. This change in color merely indicates that there has been a harmless chemical transformation at the surface of the pipe. A small reduction in impact strength could occur at the discolored surfaces; but it is of a very small order and can be removed during the joining process.

Unlike many other thermoplastic materials, FR-PVDF is not susceptible to degradation due to UV exposure. Therefore, prolonged exposure of FR-PVDF pipe to the direct rays of the sun will not damage the pipe. For purposes of cleanliness however, it is good practice to keep pipe and fittings under a well ventilated protective cover when stored outdoors.

Painting

PP pipe and fittings can be easily protected from ultraviolet oxidation by painting with a heavily pigmented, exterior water-based latex paint. The color of the paint is not important; the pigment merely acts as an ultraviolet screen and prevents sunlight discoloration. White or some other light color is recommended since it helps reduce pipe temperature. The latex paint must be thickly applied as an opaque coating on pipe and fittings that have been cleaned well, very lightly sanded, and primed with a latex base primer.

BELOW GROUND INSTALLATION

Trenching

The trench bottom should be continuous, relatively smooth, and free of rocks. Where ledge rock, hardpan or boulders are encountered, the trench bottom should be padded using a minimum of 4" of tamped earth or sand beneath the pipe.

Trenches under slabs should allow for a 12" depth of cover over the pipe. In open locations, the trench depth should allow for the top of the pipe to be at least 12" below the maximum expected depth of frost penetration.

Pipe installed beneath surfaces which could be subjected to extremely heavy static weight or constant traffic should be shielded within a metal or concrete casing.

Backfilling

Fill piping with water of an ambient soil temperature and check joints. Cover to a depth of 6" to 8" with dirt which is free from rocks, debris or particles larger than 1/2". At this point in the proceedings, all joints should remain exposed for inspection. Leave piping to settle and normalize dimensionally, then check all joints for tightness and tamp soil layer which will act as a cushion for subsequent backfill. While tamping, see that pipe alignment, both vertical and horizontal, is not disturbed.

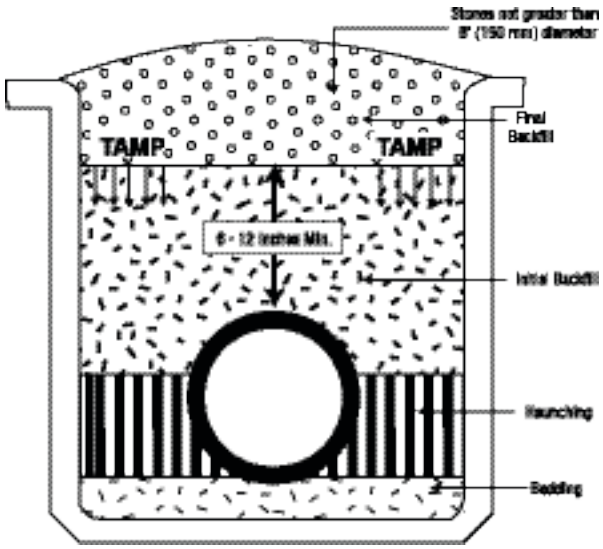

Compacting the Backfill

Compact the haunching, initial backfill and final backfill using manual equipment in accordance with the job drawings. Observe the following precautions.

1. When a "self-compacting" material is used, such as crushed stone, ensure that the material does not arch or bridge beneath the haunch of the pipe. Remove such voids with the tip of a spade.

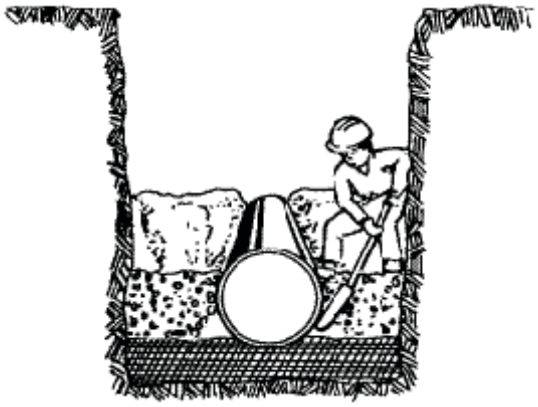

2. When compacting the material underneath and at either side of the pipe do not allow the tool or the machine to strike the pipe.
3. When compaction in excess of 85% standard proctor density is required in the haunching area ensure that the compacting effort does not dislodge the pipe from the correct grade. If the compacting effort dislodges the pipe, re-lay the pipe to the correct grade.
4. It is not necessary to compact the initial backfill directly over the top of the pipe for the sake of the pipe's structural strength. However, it may be necessary for the sake of building/roadway integrity.

When laying long runs of piping in elevated air temperatures, it is advisable to begin working from a fixed point — such as the entry or exit from a building, and work away from that point, testing and backfilling in accordance with preceding paragraphs. This procedure should then allow the piping to assume soil temperature progressively as work proceeds.

Final Backfill

Thoroughly test the system for leaks. When satisfied, cover all joints with soil and finally proceed with the remainder of backfill. Large sharp rocks which could penetrate the initial layer and damage the pipe should be removed prior to the final backfill.

ENFUSION HAND HELD CONTROL UNIT

The IPEX Enfusion hand held control unit is supplied with a 25 ft (7.62m) output lead and a hand held control unit weighing approximately 2.2lbs (1kg). The hand held unit, along with the fusion processor, are stored in a durable plastic case for easy handling and transport.

Introduction

Proper installation is key to producing a reliable and long lasting acid waste system. If the installation is not done correctly, the system will not perform well and may actually fail.

Standard Enfield Electrofusion

To ensure professional installation, make sure all installers have undergone training by IPEX in the correct handling, joining and installation methods of IPEX thermoplastic products.

Enfield fittings are manufactured with an integral resistance wire, molded in place using a proprietary manufacturing process. The wire is electrically heated by means of a microprocessor controlled Enfusion Control Unit. This results in fusion and bonding of the pipe to the fitting. A permanent joint is achieved within minutes.

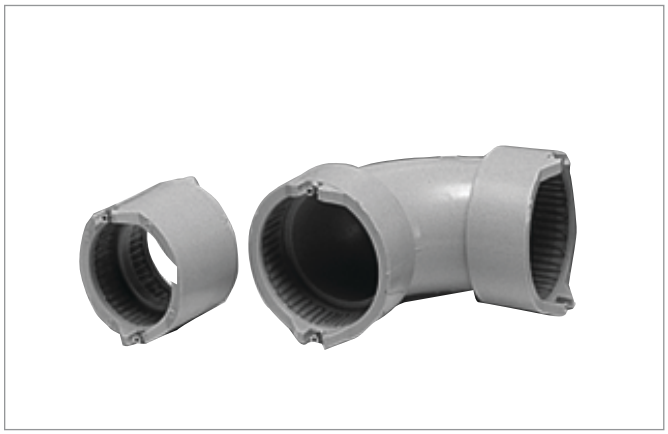

The Enfield joint achieves the optimum level of performance where it matters most –– at the fitting socket / pipe spigot interface. There is a controlled fit, controlled temperature and controlled time. All of this is achieved by means of the Enfusion Control Unit, which ensures proper electrical connections, joint timing and input/output current levels. The combination of these features provides both simplicity of jointing and perfect control. The result is an unparalleled level of joint repeatability.

Job Site Precautions

1. Do not use unit in a gaseous environment as there is a **RISK OF EXPLOSION**.
2. The unit is a Class 1 device, and must be used with a grounded power supply.
3. Only use a hydrostatic test on the system. **TESTING WITH AIR IS DANGEROUS FOR A POLYPROPYLENE (PP) ACID WASTE SYSTEM**.
4. Store pipe and fittings out of direct sunlight. If material is stored outside, it should be covered with a light colored opaque tarp. If the ambient temperature exceeds 100°F (37°C), make provisions to allow air to circulate beneath the tarp.
5. Handle the Enfusion Hand Held machine carefully. **DO NOT TAMPER!** Call your IPEX representative for machine service.
6. **DO NOT MIX BRANDS.** Good joints can only be made using Enfield pipe, fittings and clamps. Mixing brands voids all warranties.
7. Software version V1.19 on the handheld Enfusion control unit will automatically adjust the fusion cycle time to the ambient temperature. The pipe, fittings and Enfusion control unit processor must all be allowed to acclimatise to the same temperature.

INSTALLATION

For installation in cold weather, refer to the 'Cold Weather Fusion' procedure described later in this section.

Before making the Enfield joint, it is important to check with an RMS meter, that the power source is providing between 96 and 162 volts @ 40 to 70 cycles with 11-amp capacity. The Enfusion hand held control unit provides for normal power variations, however generators should be checked to assure the correct output is always being provided.

Ensure Enfusion control unit, pipe and fittings are allowed to thermalise before beginning installation.

1. Completely unwind all cables from the Enfusion hand held machine's case before use.
2. Using a suitable mitre saw/chop saw or tube cutter designed for plastic, cut the pipe square making sure to remove all burrs and loose material. **Do not chamfer**.
3. Using 60-grit emery cloth, prepare the end of the pipe by removing dirt and oil (important to obtain a good bonding surface) and roughing up an area equal to 1.5 times the fitting's socket depth. Clean the roughed up area with ethyl or isopropyl alcohol to ensure complete removal of grease and residue. **Once treated do not handle this area of the pipe or allow it to get dirty**.
4. Insert the pipe all the way to the stop at the bottom of the socket of the fitting.
5. Decide whether single or multiple joints are being made. In case of multiple joints consult the "Multiple Joints Fusion" section that follows for cable connections and maximum allowable number of simultaneous joints.
6. Loosely fit IPEX-supplied clamp(s) only over the hub(s) of the socket(s) to be fused (Figure 1).

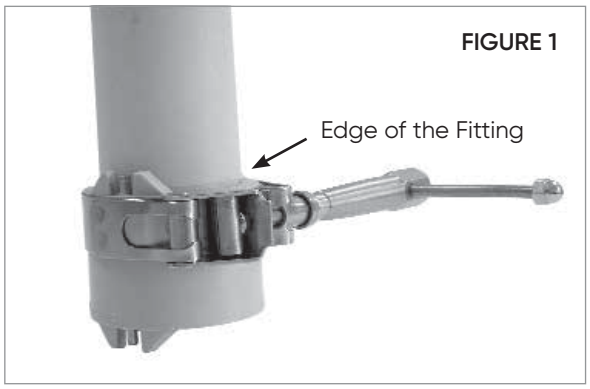

FIGURE 1

Note: The clamp should be positioned flush with the edge of the fitting. The clamp must be tightened sufficiently to prevent the pipe from rotating inside the fitting. Wheel handle clamps should not be used.

7. Tighten the clamp(s). A tight clamp is essential to the quality of the joint. **It should not be possible to rotate the pipe inside the fitting socket when the clamp is fully tightened**.
8. Turn the Enfusion hand held control unit on and observe the copyright message and the software version being displayed as the machine runs a self-diagnostic test.
9. Following the "CONNECT LEADS AND FITTINGS" instruction on the display, connect the output leads (Figure 2). If required, connect link cable for multiple fusions.

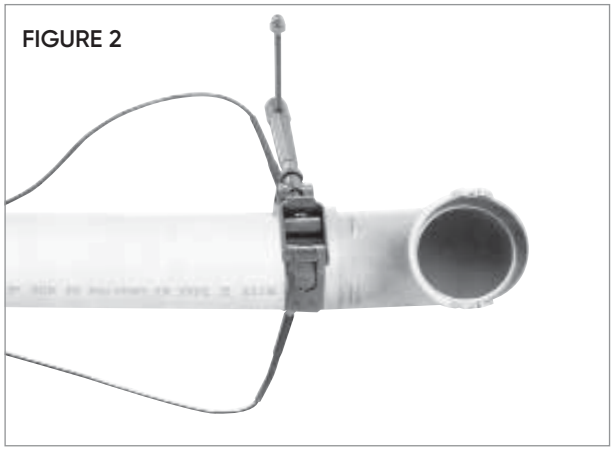

FIGURE 2

IPEX has developed a revision to its fusion machine software. Your machine will display the software version upon start up, the most recent version being V1.19 (2014). This revision removes the need to select a size range, and automatically adjusts the fusion time based on ambient temperature. Allow time for the machine pipe and couplings to acclimatise.

10. **With software UPDATE V1.19 (2014)**

    Once the leads are connected and you are ready to begin the fusion process. The machine will automatically check to ensure a connection is present and measure the ambient air temperature to set the fusion time.

    Without software UPDATE

    Machines that have NOT been updated will require you to "SELECT SIZE". IPEX recommends the use of the 3" to 12" size range for all fittings regardless of size. (example: 1.5" fittings should use the 3" to 12" selection)

11. To begin the fusion cycle press START. Time will begin to count down to zero.

12. Upon completion of the fusion cycle an audible alarm will sound and the message "WELD COMPLETE DISCONNECT LEADS" will be displayed. A 30 second rest period must be observed to allow the joint(s) to cool efore disconnecting the leads. The Enfusion machine will automatically reset, ready for the next operation.

13. Allow five additional minutes before removing the clamps so that the joint can sufficiently cool and properly cure.

FIGURE 3

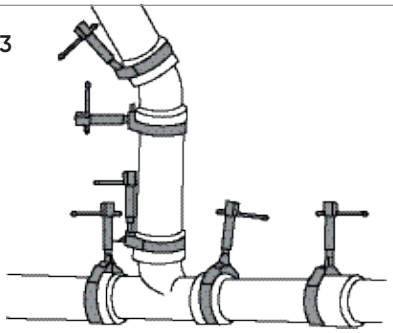

Note: If leads are accidentally disconnected during the fusion process "Reconnect Lead & Press Start" will appear and a 120 second countdown will begin on the Enfusion hand held control unit. Reconnect leads and press START to continue the fusion cycle fusion.

If leads are reconnected during the countdown, the fusion machine will automatically assess how long the fusion cycle must be depending on how long the leads have been disconnected. If the leads are not reconnected during the countdown the machine will sound an audible alarm and restart the fusion cycle time. Prior to re-fusing, 1-1/2" – 3" fittings should cool for 5 minutes and 4" – 12" fittings should cool for 7 minutes. The Enfusion Control Unit should be reset by shutting it off and following instructions from step 8 onwards.

V1.19 Enfusion Hand Held Control Unit

To obtain V1.19 on your hand held, please contact an IPEX representative.

L2600 (Old Style Machine) Software UPDATE

This machine cannot be reprogrammed with the software update mentioned above. Due to the age of the machine and its components IPEX can no longer support updates to the machine's components or software.

Note: It is recommended that you replace these (L2600) machines with newer models. Until such time that a machine can be purchased, all joints regardless of size must be fused using the 4" size selection. Contact your local IPEX representative.

SS T-Bar Handle Joint Hub Clamp for use during fusion of Enfield™ electrofusion joints

- Redesigned T-bar handle for greater ease of use. (more efficient transfer of torque)
- Reduces the torque required to tighten the fitting on the pipe.
- Oil impregnated bushing reduces friction and resulting worker fatigue from repetitive tightening.
- Easy replacement of friction reducing bushings.
- Part of the IPEX Enfield™ corrosive waste system of pipe, fittings and accessories.
- Replacement oil impregnated bushings available.
- Enfield™ components should only be joined using Enfield™ Electrofusion Control Units.
- IPEX components are dimensionally matched; do not install system of mixed brands without our express written consent.

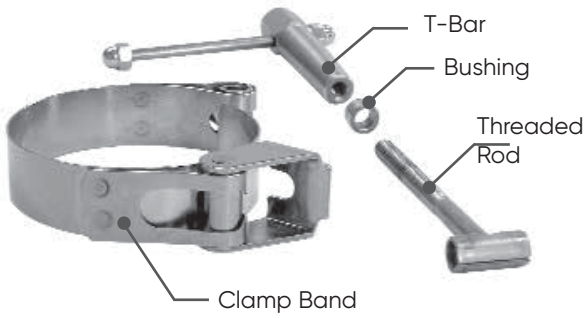

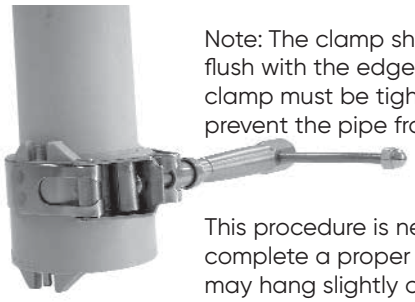

Note: The clamp should be positioned flush with the edge of the fitting. The clamp must be tightened sufficiently to prevent the pipe from rotating inside the fitting.

This procedure is necessary to complete a proper joint. The clamp may hang slightly over the end of the hub on certain fittings. If this occurs, please ensure that the fusion leads do not come into contact with the clamp.

Enfield™ Electrofusion Joint Hub Clamp with New SS T-Bar Handle

Size (in)	Product Codes	Significant No.
1-1/2	257254	L26101
2	257256	L26102
3	257257	L26103
4	257258	L26104
6	257259	L26106
8	257260	L26108
10	257255	L261010
12	257262	L261012

Replacement Oil Impregnated Brass Bushings – Replace as Needed

Clamp Size (in)	Product Code	Significant No.
1-1/2 - 12	257094	L2610B

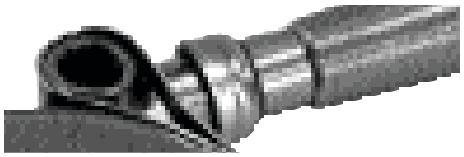

Stainless Steel T-Bar Handle for Hub Clamp*

Clamp Size (in)	Product Code	Significant No.
1-1/2 - 12	257125	L2610T

* To retrofit previously available black plastic wheel handles supplied on Enfield™ Hub Clamps

MULTIPLE JOINT FUSION

Enfield Fusion Times

With the update to the fusion machine software (V1.19, 2014), fusion times are now standard across all sizes. Fusion times will however vary based on the ambient air temperature. As the temperature goes up the fusion time will go down, conversely, as the temperature goes down the time will go up. As a reference: at 73°F (23°C) the fusion time is 125 seconds.

The chart indicates the number of joints for each side that can be fused at one time.

Maximum Allowable Joints Per Size

Pipe Size (inches)	1-1/2	2	3	4	6	8	10	12
Max # of joints	8	6	4	3	2	1	1	1

Attach the connector leads and link cable leads to fitting terminals as shown in Figure 4. **The link cables should be connected in series.** Follow the fusion procedure, as outlined in steps 1-13, to complete the multiple fusion.

FIGURE 4

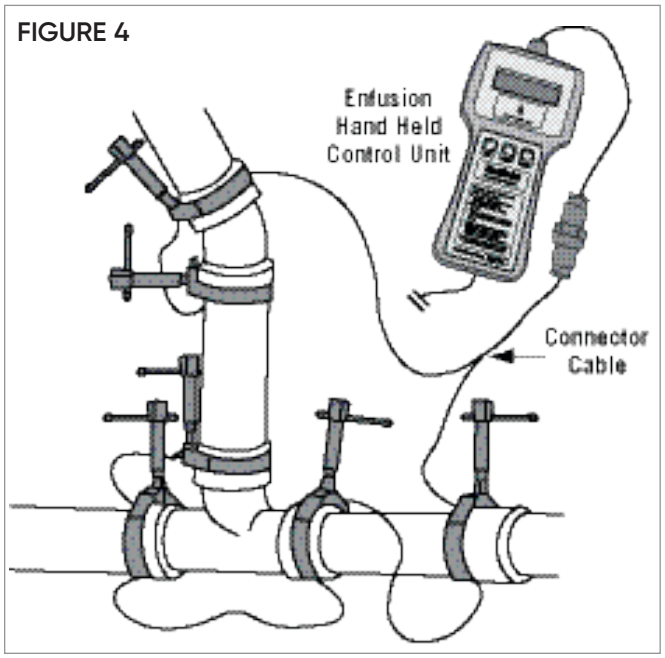

Note: Each joint being fused must have an IPEX T-Bar clamp flush with the other edge of the socket as shown previously in Figure 1.

Multiple Joints Across Different Sizes

With the update to the fusion machine software (V1.19, 2014), fusion times are now standard across all sizes, as such the combination of different size fittings that can be fused at the same time is much less restricted.

Any number of fittings or combination of sizes is now possible, provided that when you add the joint diameter sizes up – the total does not exceed 12.

Example A

1 x 8" and 1 x 4" = 12. ☑
Therefore one 8" fusion joint and one 4" fusion joint **could** be done at the same time.

Example B

1 x 8" and 2 x 3" = 14. ☒
Therefore one 8" fusion joint and two 3" fusion joints **could not** be done at the same time.

Example C

2 x 1.5" and 2 x 4" = 11. ☑
Therefore two 1.5" fusion joints and two 4" fusion joints **could** be done at the same time.

Example D

1 x 2" and 2 x 6" = 14. ☒
Therefore one 2" fusion joint and two 6" fusion joints **could not** be done at the same time.

COLD WEATHER FUSION

Whenever possible pipe and fittings should be stored indoors. It is always preferable to perform pipe preparation and welding in a protected environment. However, should that not be possible, during cold weather (particularly at freezing or below) it is recommended that both pipe and fittings be stored in similar ambient temperature and conditions.

In cold weather applications, the lower operating temperature limit (0°F) of the Enfusion Hand-Held Control Unit must be strictly followed.

If ambient conditions during the installaiton fall below 0°F, postpone installation until ambient installation temperatures have increased to fall within the Operating Temperature Range of the Enfusion Hand-Held Control Unit.

Daily, weekly or seasonal temperature fluctuations may result in thermal expansion and/or contraction of the piping system. Refer to the System Design Considerations section of this manual for suitable techniques for accommodating thermal expansion and contraction and consult the Engineer of Record.

In addition, when the actual welding takes place in freezing or sub freezing environments, this cold weather pre fusion procedure must be followed.

NOTE: Enfusion Hand-Held Control Unit software update V1.19 will automatically adjust the fusion time as the ambient temperature changes. The following procedure is required for Enfusion Hand-Held Control Unit running software older than V1.19.

1. Follow steps 1 through 9 of Standard Enfield Electrofusion Installation.
2. When the "SELECT SIZE" prompt appears on the screen keep pushing the select button until all pipe sizes have been displayed.
3. Next will appear the first flash cycle: 1-1/2" to 2".
4. If the fitting(s) being welded is within this flash range, press START.
5. If the fitting(s) being welded is not included in this flash range, press the SELECT button one more time to display the second flash cycle: 3" through 12".
6. Press START.
7. Upon completion of the flash cycle, the display will show the "WELD COMPLETE DISCONNECT LEAD" message. Do not disconnect the leads.
8. Tighten clamps if necessary (see notes below).
9. Allow 1-1/2" to 3" joints to cool for 5 minutes, 4" to 8" joints to cool for 7 minutes and 10" to 12" joints to cool for 10 minutes before beginning the fusion cycle.
10. After cooling, continue with steps 10 through 14 of the Standard Enfield Electrofusion Installation procedure.

NOTES: Screen the joints being fused from the wind in very cold conditions to prevent heat loss.

Particular care must be taken to adequately tighten the clamps during extremely cold weather because of increased stiffness of the materials. One or two additional turns of the tightening screw might be required, above and beyond what is commonly sufficient in fair weather conditions. This is particularly true when welding large diameters.

For Enfusion Hand-Held Control units running software older than V1.19, the additional tightening of the clamps, designed to eliminate any gap between the pipe and the fitting, should be performed towards the end of the flash cycle.

However, care must be taken not to over-tighten to avoid distorting or crushing the fitting joint.

Marking of the pipe (indicating socket depth) is also recommended to assure that the pipe remains fully seated
in the socket during the fusion cycle.

FAULT CODE ANALYSIS

FAULT NUMBER AND CODE		ACTION
0	WELD OK	No Fault, weld completed OK.
1	STUCK BUTTON ON START UP	This fault shows when the power is first switched on. Either the Stop, Start, or a keypad button is stuck in. Free the button to clear the fault.
2	OUTPUT FAULT BEFORE WELD START	This fault shows when the power is first switched on. The unit will check the output relay to make sure it is working correctly. If this fault happens, then the internal power relays have pulled in to the closed position. Return unit for service.
4	NO CALIBRATION	This fault happens when the unit has no calibration. This normally not show, and it the unit has been calibrated, would be caused by a fault with the internal memory. Return unit for service.
7	AMBIENT TEMPERATURE TOO HIGH	If this ambient is measured at over +50°C (122°F) then this fault will show.
8	AMBIENT TEMPERATURE TOO LOW	If the ambient is measured at below -20°C (-4°F) then this fault will show.
9	AMBIENT TEMPERATURE FAULT	This fault is shown if the temperature is measured as less than -100°C (-148°F) or more than +100°C (212°F). This effectively means a short circuit or open circuit sensor.
10	LOW SUPPLY FREQUENCY <40HZ	The unit has detected that the supply frequency is below 40 Hz. This will normally be caused by a poor quality generator. If this fault happens, then check the supply or change the generator.
11	HIGH SUPPLY FREQUENCY >70HZ	The unit has detected that the supply frequency is above 70 Hz. This will normally be caused by a poor quality generator. If this fault happens, then check the supply or change the generator.
12	HI SUPPLY VOLTAGE >140V	The unit has detected that the supply voltage is more than 140 volts. Check the supply voltage and if necessary use a different generator.
13	LOW SUPPLY VOLTAGE <95V	This vault can be caused by a few problems. It could be that the generator is running slowly and so the supply voltage is low. Try speeding the generator up or use a different generator. It could also be caused by a generator that is too small. If a large fitting is welded, then a large amount of power will be needed from the generator. If it can not supply this power, then it will stall and the voltage will drop away. Check that the generator is the correct size, if needs be try another generator. It could be caused by the use of long extension leads. If a large fitting is welded, then a high current will be taken from the supply. If extension leads are used, three will be a volts drop down the lead making the unit sense a low supply voltage. Try not to use extension leads with the unit. If you have to, then use just 30 feet of cable, the same size fitted to the unit.
14	RELAY FAILED TO LATCH ON WELD START	This fault could happen when the start button is pressed. If the main power relays do not operate correctly, then this fault will be shown. Return unit for service.
20	WELDING CURRENT EXCESSIVE (>150%)	This fault will happen if the welding current is more than 50% high for more than 0.3 seconds. this fault is normally caused by a fault with the unit, a short circuit triac. Return unit for service.
21	WELDING CURRENT HIGH (>125%)	This fault will happen if the welding current is more than 25% high for more than 1 second. This fault is normally caused by a fault within the unit, a short circuit triac. Return unit for service.
22	WELDING CURRENT HIGH (>112.5%)	This fault will happen if the welding current is more than 6.25% high for more than 2 seconds. this fault will normally be caused by a poor quality generator with the supply voltage fluctuating. Try a different generator.
23	WELDING CURRENT HIGH (>106.25%)	This fault will happen if the welding current is more than 6.25% high for more than 2 seconds. this fault will normally be caused by a poor quality generator with the supply voltage fluctuating. Try a different generator.
24	WELDING CURRENT HIGH (>101.5%)	This fault will happen if the welding current is more than 1.5% high for more than 3 seconds. This fault will normally be caused by a poor quality generator with the supply voltage fluctuating. Try a different generator.
25	USER STOP BUTTON PRESSED	The operator has pressed the stop button.
26	RELAY UNLATCHED	During welding, if the main power relay disconnects, then this fault will be shown. It could be caused by the unit being knocked or a temporary dip in the power supply.
27	FITTING OPEN CIRCUIT	This fault is shown if the output lead disconnects from the fitting while welding. Follow the guidelines from this manual to reconnect the lead and try welding again.
28	WELDING CURRENT LOW (<98.5%)	This fault will happen if the welding current is more than 1.5% low for more than 3 seconds. This can be caused by a generator that is not big enough to supply the required power to the fitting. Check the size of the generator and if needs be try another generator. It can also be caused by using long extension leads with the unit. It is recommended that only 30 feet of extension are used, and the cable should be the same thickness as the input lead on the unit.
29	WELDING CURRENT LOW (<50%)	This fault will happen if the welding current is more than 50% low for more than 1 second. It can be caused by a faulty fitting. Try another fitting. If this doesn't clear the fault then there is a problem inside the unit. Return unit for service.
127	POWER OFF FAILURE	If the power is turned off while the unit is welding, this fault will be recorded to the catalogue.

REPAIR INFORMATION

There are no user serviceable parts inside the welding unit. If an internal fault happens with the unit then it must be returned to IPEX for repair. Please contact your local IPEX distributor for instructions on the proper return of your enfusion unit.

Specification for Enfusion Hand-Held Control Unit

Operating Mode	Enfield Automatic
Operating Language	English
Operating Temperature Range	0°F to 120°F
Input Voltage	120 V ac 95V to 140V
Input Current	10.5A
Input Frequency	50 Hz 40 Hz to 70 Hz
Input Power	100 VA to 1250 VA
Output Current	18 A ac true rms
Output Voltage	3 V to 50 V ac true rem
Output Power	50 W to 900 W
Output Stability	+/-1.5%
Power Factor	0.72
Unit Weight	33 lb
Hand Held Weight	2.2 lb
Size	15.7" x 12.6" x 6.3"
Environmental Protection	IP65
Lead Length (to power case)	6 ft
Lead Length (to hand held unit)	25 ft
Lead Length (to fitting)	6.6 ft

ENFIELD TESTING

WARNING

Use of compressed air or gas in PP or PVDF pipe and fittings can result in explosive failures and cause severe injury or death.

- NEVER use compressed air or gas in Enfield, Labline, or Plenumline pipes, fittings, or accessories.
- NEVER test Enfield, Labline, or Plenumline systems with compressed air or gas, or air-over-water boosters.
- ONLY use Enfield, Labline, or Plenumline systems for approved chemicals.

The purpose of a site pressure test is to establish that all joints have been correctly made.

Hydrostatically (water) test in accordance with local plumbing code or with authority having jurisdiction; but not exceeding a maximum of 10 ft of head pressure. After making the first 20 or 30 joints, it is highly recommended that a test be applied to ensure that the joint-making technique is satisfactory. If a leak is discovered, follow the appropriate procedure below.

Hydrostatic testing of the joints can be performed 10 minutes after the final joint has been completed. The low pressure testing procedure detailed below should be strictly followed.

1. Fully inspect the installed piping for evidence of mechanical abuse and suspect joints.
2. Split the system into convenient test sections, not exceeding 1,000 feet. The piping should be capped off with an expandable plug at the end of the pipe section to be tested.
3. Prior to starting the test in below grade applications, straight lengths of pipe should be backfilled between fittings that are tested.
4. Slowly fill the pipe section with water, taking care to evaluate all trapped air in the process. Use air release valves in any high spots in the system. Do not pressurize at this stage.
5. Leave the pipe for at least one hour to allow an equilibrium temperature to be achieved.
6. Visually check the system for leaks.
7. Pressurize the system to a suggested maximum of 10 feet of head by means of a standard 10' standing water test using a 10' vertical riser, or a low-pressure hand pump.
8. Leave the line at 10 feet of head for a period of 2 hours, during which time the water level should not change (standing water test), nor should the pressure gauge reading change (hand pump test).
9. If there is a significant drop in pressure, or extended times are required to achieve the desired pressure, either joint leakage has occurred or air is still entrapped in the line. In this event inspect for joint leaks. If none are found, check for entrapped air – these air pockets must be removed prior to continuing the test.
10. If joints are found to be leaking, the system must be fully drained and the joints repaired. Dry, or marginally fused Enfield joints can be re-fused by following steps 5 through 13 in the Standard Enfield Electrofusion Installation procedure. To remove moisture from the joint, use the drying cycle.
    - To dry the Enfield joint using the handheld Enfusion machine with software V1.19, users need to connect the leads and fittings. The machine will prompt the user to "PRESS START". The user needs to press the "SELECT" button and then "START" button immediately after. The drying cycle will appear with a 45 second count down.
    - Allow the joint to cool.
    - Now re-fuse using the correct Enfusion machine settings for the size of pipe being joined following steps 5-13 of the Standard Enfield Electrofusion Installation procedure.
    - Should any of the re-welded fitting(s) fail the second hydro-test, the leaking joint(s) can be back-welded with a hot-air gun and welding rod. Should the back-welded joint(s) fail a third hydro-test, they will need to be cut out of the system and substituted with new fittings.
    - If a joint has be to cut out and replaced, the procedure for pipe modification detailed in this manual should be strictly followed.
11. Repeat the 10 feet head test after repairing any leaking joints, following the procedure described above.

ENFIELD PIPE REPAIR

In the unlikely event of a leak, Enfield piping systems can be easily repaired.

Procedure:

1. Determine exact location of leak. For below grade installation excavate the ground near the pipe leak, taking care not to cause damage to the piping system in the process. Hand digging is suggested. The ground should be excavated to a depth of at least 6" below the bottom of the pipe.

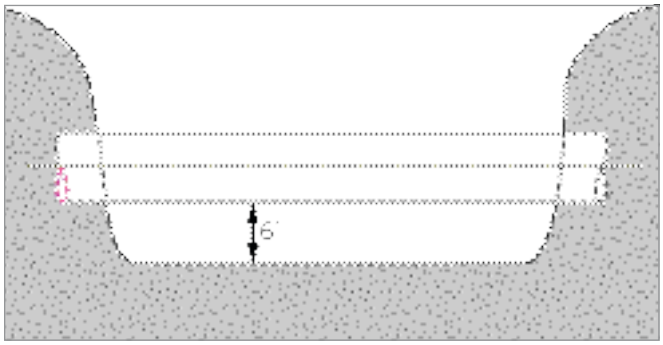

2. Measure the length of pipe to be removed then cut completely and SQUARELY through the pipe sections. Remove the damaged section of pipe.

3. Mark a pencil line on the end of both open ends of the pipe to locate the joining position for the repair couplings. The pencil line should be at the following distance from the pipe ends.

Pipe Size (in)	Pencil Mark (in)
1-1/2	3/4
2	1
3	1-3/8
4	1-1/2
6	2
8	2-1/4

4. Slide one repair coupling over the exposed spigots of the two pipe sections.

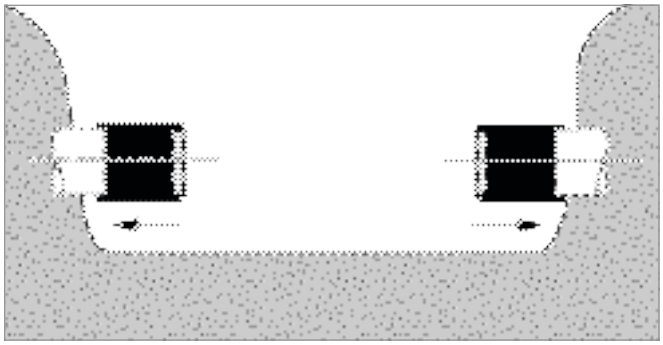

5. Measure, prepare and insert a pipe spool piece into the line to be repaired.

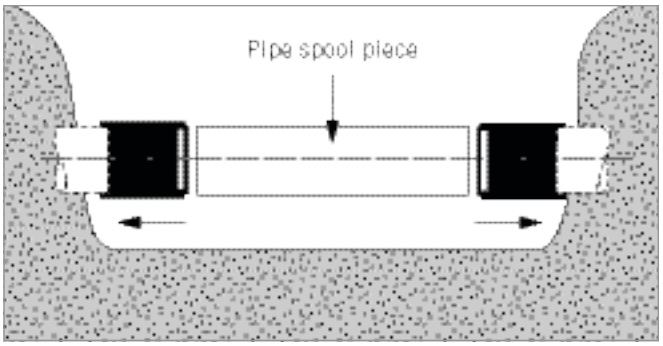

6. Slide the repair couplings into position between the pencil lines previously drawn on the pipe ends. Place the clamps over the repair couplings. Tighten the clamps and fuse the joints using the correct Enfusion machine settings.

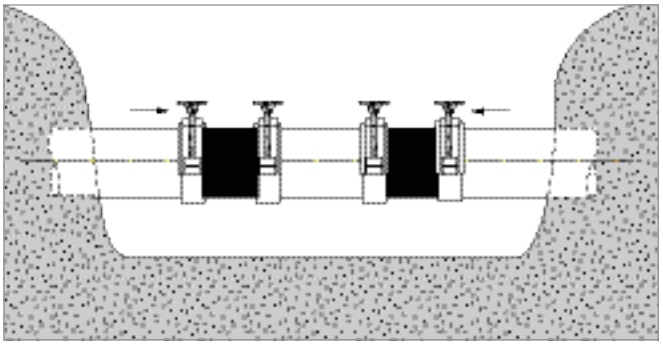

7. Remove the hub clamps after allowing the joint to cool for 10 minutes.

8. If buried below ground, surround the pipe with pea gravel, then backfill and consolidate.

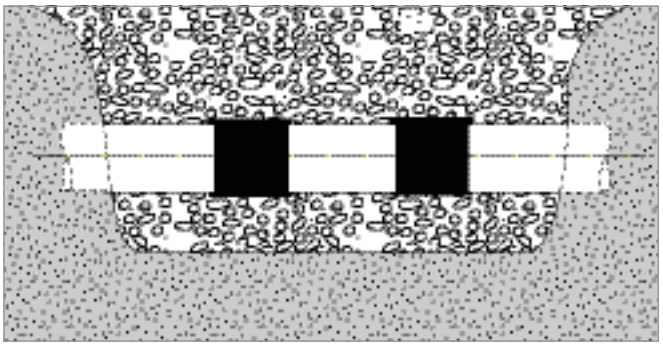

LABLINE AND PLENUMLINE JOINTS

To ensure professional installation, make sure all installers have undergone training by IPEX in the correct handling, joining and installation methods of IPEX thermoplastic products.

POINTS TO REMEMBER

a. **YELLOW & BLUE ELASTOLIVES DO NOT REQUIRE PRE-HEATING**.

   If heated, maximum temperature should not exceed 175°F. (79°C)

b. **YELLOW LABLINE AND BLUE PLENUMLINE ELASTOLIVES ARE NOT INTERCHANGEABLE**

c. The pipe end should be clean and there should be no deep longitudinal grooves in it.

d. It is desirable to use a chain vise to hold 3" and 4" pipe firmly during cutting and grooving operations. When grooving 1-1/2" and 2" pipe, a strap wrench should be used to hold the pipe to prevent its rotation.

e. After grooving, the pipe should be kept clean so that foreign material is not introduced into the groove.

f. Ensure the grooving tool has a sharp blade to make a clean-shouldered groove.

g. The cutting blade should always be fully retracted whenever the tool is put on or taken off the pipe. If any resistance is felt when putting the tool onto the pipe or taking it off, the blade position should be checked.

h. Each nut must be fully tightened as the installation progresses. Do not assemble the system loosely and tighten nuts last, as layout length errors will go undiscovered until such time as the nuts are finally tightened. Avoid misalignment.

i. When tightening fittings, the dry fitting surfaces tend to bind against each other preventing the nuts from being fully tightened. To overcome this, either **IPEX Acid Waste Lubricant** or IPEX approved petroleum jelly should be used on fitting threads and elastolives. The lubrication allows the pipe and elastolive to glide smoothly into position against the fitting sealing area and enables the nuts to be tightened to their full thread capacity.

j. Use two spanner wrenches when tightening fittings. This enables the nuts to be tightened to their full thread capacity without damaging the fitting.

Procedure

1. Ensure each fitting is supplied with the correct number of elastolives (sealing rings) and nuts.

2. Verify the grooving tool is sharp. Cut the pipe to the desired length using a tubing cutter fitted with a wheel designed for plastic pipe. A handsaw and miter box may also be used. **Ensure pipe ends are square and trimmed free of burrs.**

3. Examine the grooving tool to ensure that the cutting blade is fully retracted. Insert the pipe into the grooving tool.

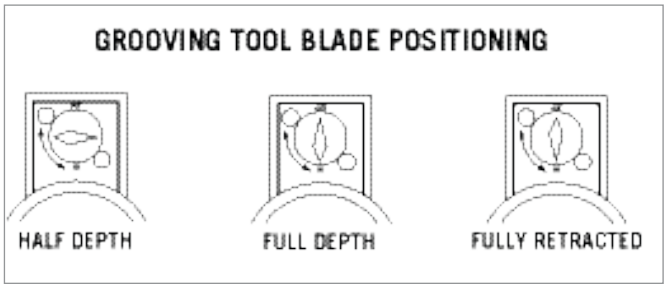

4. Set the grooving blade at the half-depth position and rotate the tool in a counter-clockwise direction. After one complete turn, set the blade at the full-depth position and again rotate the tool one full turn counter-clockwise. Fully retract the blade and remove the tool from the pipe. A shallow groove has now been formed around the pipe. Any material left as a feather edge in the groove should be removed. Care should be taken not to damage the square edge (shoulder) of the groove, particularly at the edge near the spigot end of the pipe as this is the primary sealing surface.

Feathered or rounded edges may indicate a worn tool and possible leakage. Make sure the groove shoulders are sharp.

1-1/2" and 2" Joint Details

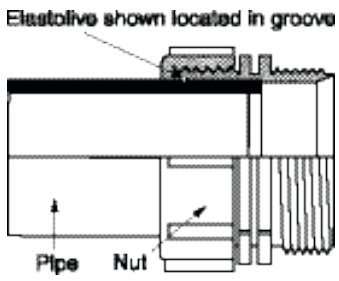

Once engaged in the groove, the elastolive virtually becomes part of the pipe and when the nut is tightened, the pipe is locked into the fitting.

3" and 4" Joint Details

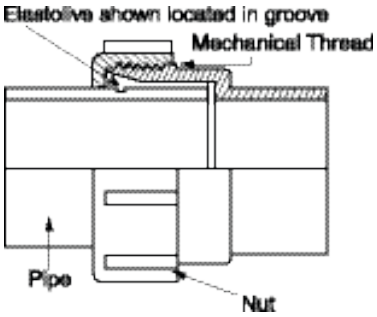

The 3" and 4" joint design differ from smaller versions in that the sealing ridges are located on the fitting and the elastolive extends to the end of the pipe.

5. Place the nut onto the pipe with the threaded side to the spigot end of the pipe. Take the elastolive, stretch it and pull it over the pipe with the thick edge first and the taper pointing to the spigot end of the pipe. Slide it down the pipe and onto the groove. Once on the groove "work it" a bit to make sure that the rib on the underside of the elastolive engages the full circumference of the groove.

   Note: Use IPEX Acid Waste Lubricant on 3" and 4" elastolives to aid installation when sliding elastolives on to pipe.

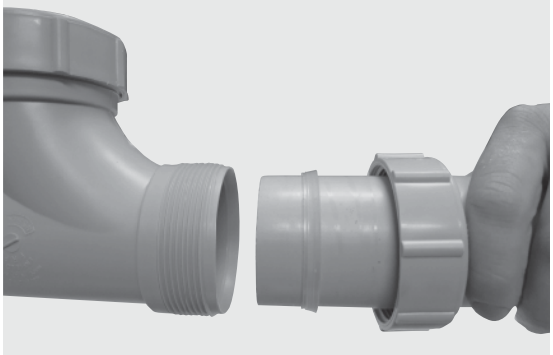

*If you are working on a job that has the old translucent non-elastic olives, consult your "heat olive" Technical Bulletin or call IPEX Customer Services for technical information.

6. Apply IPEX Acid Waste Lubricant or IPEX approved petroleum jelly to both the thread and the elastolive then push the pipe squarely into the fitting.

   Note: All factory shipped fitting nuts must be disassembled for lubrication.

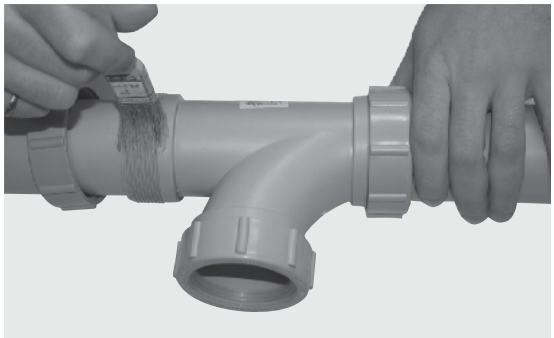

7. Hand-tighten the nut, then tighten using a spanner wrench. For stability and leverage, two spanner wrenches may be used as depicted. The nut must be tightened to achieve full thread engagement.

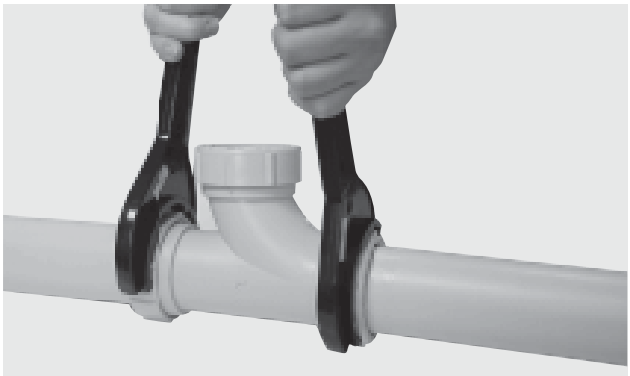

The joint is now ready for testing.

Average Number of Joint per kilogram of IPEX Acid Waste Lubricant*

Pipe size (in)	No. of Joints / kg
1-1/2	250
2	250
3	100
4	67

* The figures in the table are estimates based on laboratory tests

Note: Due to the many variables in the field, these figures should be used as a general guideline only.

LABLINE AND PLENUMLINE TESTING

WARNING

Use of compressed air or gas in PP or PVDF pipe and fittings can result in explosive failures and cause severe injury or death.

- NEVER use compressed air or gas in Enfield, Labline, or Plenumline pipes, fittings, or accessories.
- NEVER test Enfield, Labline, or Plenumline systems with compressed air or gas, or air-over-water boosters.
- ONLY use Enfield, Labline, or Plenumline systems for approved chemicals.

The purpose of a site pressure test is to establish that all joints have been correctly made.

Hydro test in accordance with local plumbing code or with authority having jurisdiction or with a maximum of 10 ft of head pressure. After making the first 20 or 30 joints, it is recommended that a test be applied to prove that the joint-making technique is satisfactory. If a leak is discovered, follow the appropriate procedure below.

Hydrostatic testing of the joints can be performed immediately after the final joint has been completed. The low pressure testing procedure detailed below should be strictly followed.

1. Fully inspect the installed piping for evidence of mechanical abuse and suspect joints.
2. Split the system into convenient test sections, not exceeding 1,000 feet. The piping should be capped off with an expandable plug at the end of the pipe section to be tested.
3. Prior to starting the test in below grade applications, straight lengths of pipe should be backfilled between fittings that are tested.
4. Slowly fill the pipe section with water, taking care to evaluate all trapped air in the process. Use air release valves in any high spots in the system. Do not pressurize at this stage.
5. Leave the pipe for at least one hour to allow an equilibrium temperature to be achieved.
6. Visually check the system for leaks.
7. Pressurize the system to a suggested maximum of 10 feet of head by means of a standard 10' standing water test using a 10' vertical riser, or a low-pressure hand pump.
8. Leave the line at 10 of feet head for a period of 2 hours, during which time the water level should not change (standing water test), nor should the pressure gauge reading change (hand pump test).
9. If there is a significant drop in pressure, or extended times are required to achieve the desired pressure, either joint leakage has occurred or air is still entrapped in the line. In this event inspect for joint leaks. If none are found, check for entrapped air – these air pockets must be removed prior to continuing the test.
10. If joints are leaking, tighten the nut 1/8 to 1/4 turn and wipe the fitting to remove excess water. This should normally cure the problem. If it does not, then the grooving or setting of the elastolive should be investigated. Drain the system and undo the suspect fitting. Test first that the elastolive feels tight on the pipe by attempting to turn it with reasonable pressure such as you might use to unscrew the cap of a bottle. The elastolive should not easily move around the pipe. If it does, it should be replaced. If the elastolive is tight, examine it, particularly at the front, for signs of bad grooving or shavings between the elastolive and the groove. If the front edge of the groove is damaged, the joint must be re-made and the piece of pipe replaced. When examining a leaking 3" or 4" joint, particular attention should be paid to possible misalignment, as this is the most likely cause of such a leak. Make sure any misalignment is corrected before re-testing.
11. Repeat the 10 feet head test after repairing any leaking joints, following the procedure described above.

NOTES

RETURN AIR PLENUM GUIDELINES

Piping installed in spaces used as return air plenums must have a flame spread rating of 25 or less, smoke development classification of 50 or less as tested in accordance with ULC S102.2. While glass piping has been the traditional choice for acid waste piping in plenums, IPEX's Plenumline piping meets these requirements.

Features and Benefits:

- **Plenumline is tested in accordance with ULC S102.2** requirements for flame spread and smoke development.
- **Saves cost** on material and installation
- **Meets the intent of nationally recognized plumbing and building codes.***
- **Single source for acid waste piping.** Specify and install Enfield, Labline and/or Plenumline below ground, above ground, in wall chases, under the bench, and in plenum spaces.

* **NOTE:** Always check local building codes to ensure compliance.

RETURN AIR PLENUM OPTIONS

Plenumline PVDF

To meet a flame spread index of 25 or less and a smoke development index of 50 or less when tested in accordance with ULC S102.2.

The Plenumline flame retardant PVDF piping system does not require any over-wrap or insulation.

Plenumline PVDF utilizes the same joining method as Labline polypropylene.

Note: Methods for installing pipe through fire separations should follow the applicable building and plumbing codes and be approved by the local authority having jurisdiction. **The use of caulk or sealant against the surface of the pipe is cautioned as some types may not be compatible with the pipe material**.

ADAPTING TO OTHER DRAINLINE MATERIALS

The methods depicted below are recommended only as a means of adapting to other drainline materials. Enfield and Labline components are dimensionally matched to assure installation success. Do not install a system of mixed brands.

Metal Pipe-Caulked

1. Roughen or score pipe end with suitable tool or coarse file to provide a "key".
2. Insert Enfield pipe until it bottoms at the stop.
3. Pack hub half full with asbestos rope, or acid resistant oakum.
4. Caulk with hot lead, lead wool or caulking cement.

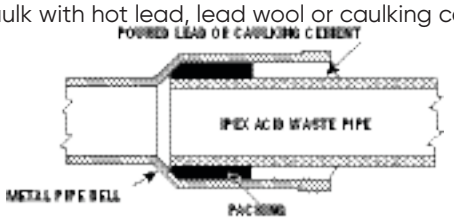

Note: Ensure PP pipe does not melt

Plastic Pipe

Groove both sections and use **Labline** coupling.

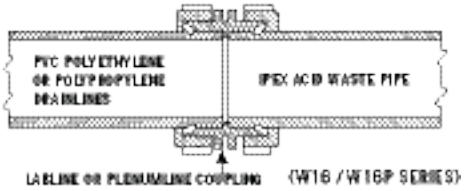

Glass

Use an **Enfield** glass adapter and a compression coupling available from glass drainline vendors.

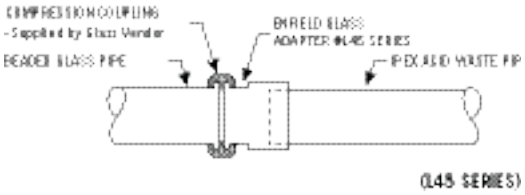

Use a **Labline** glass adapter and compression coupling available from glass drainline vendors.

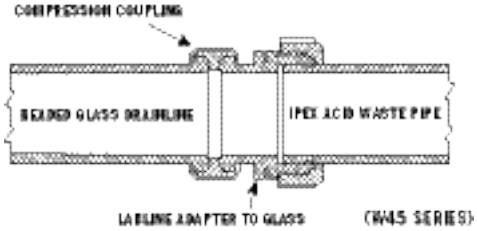

Silicon Iron

Use an **Enfield** Cast Iron adapter and a Cast Iron coupling available from iron pipe manufacturer.

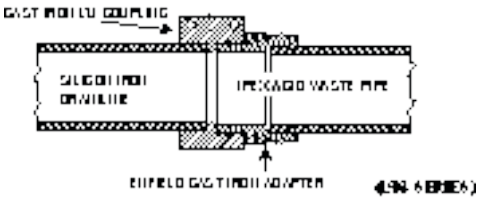

Use a **Labline** Duriron adapter and a Duriron coupling available from silicon iron pipe manufacturer.

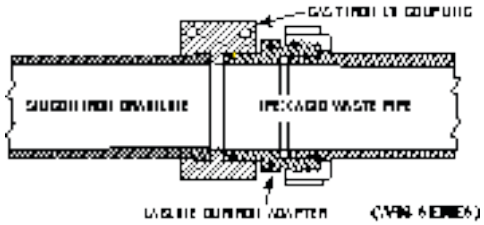

Metal Pipe-Threaded

Use an **Enfield** Female adapter and Teflon tape or compatible thread sealant.

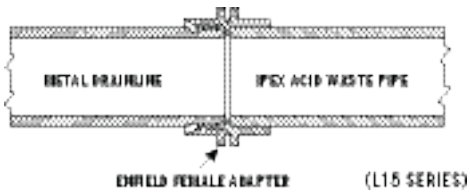

Use a **Labline** Female adapter and Teflon tape or compatible thread sealant.

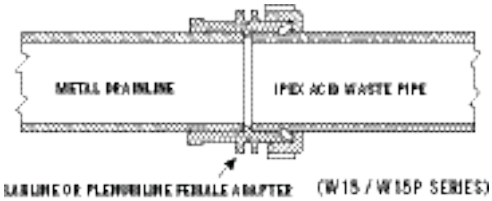

TYPICAL UNDERBENCH CONFIGURATIONS

The following configurations are meant to be a guide for installers on the proper assembly of IPEX acid waste systems. They are acceptable in most applications and allow the product to function in its intended manner. However, one should check with local authorities having jurisdiction to ensure that the configuration is assembled according to code.

If joints should need pipe thread sealant, IPEX recommends the use of Teflon® pipe tape or compatible thread sealant.

Tailpiece adapter with P Trap

1

1-W301 or W311 sink outlet

1-W551 or W5512 swivel sink strainer adapter

1-W1021 / W1021P 1½" P Trap

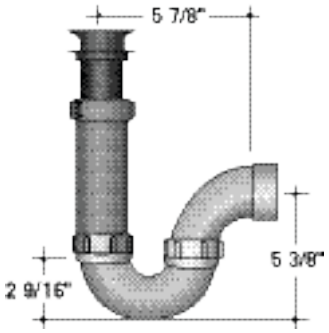

W301 or W311 sink outlet to W501 or W511 Universal trap

2

1-W301 or W311 sink outlet

1-W501 or W511 Universal Trap

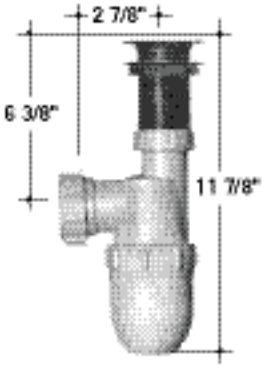

Other brand threaded sink outlet to W501 or W511 Universal trap

3

1-Threaded sink outlet (other brand)

1-W131 Adapter (use W121 adapter if tail piece is 1¼")

1-W501 or W511 Universal Trap

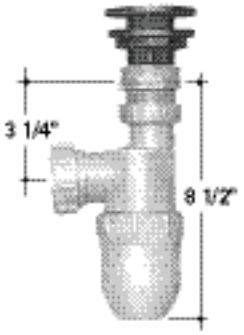

W301 or W311 sink outlet to W5015 Universal trap

4

1-W301 or W311 sink outlet

1-W5015 or W5115 Universal Trap S-Type

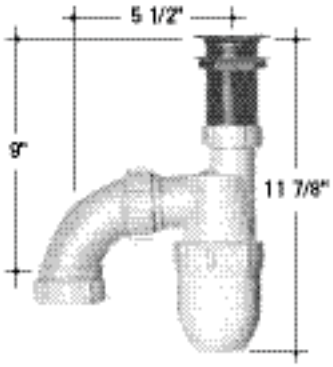

Other brand threaded sink outlet to W5015 or W5115 Universal trap

5

1-Threaded sink outlet (other brand)

1-W131 Adapter (use W121 adapter if tailpiece is 1¼")

1-W5015 or W5115 Universal Trap S-Type

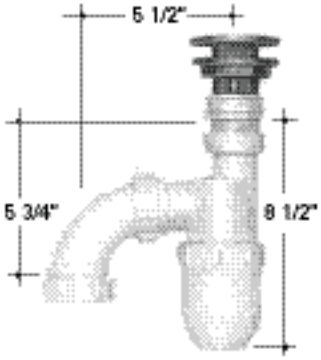

W401 6" round cup sink to W501 or W511 Universal trap

6

1-W401 6" round cup sink

1-W501 or W511 Universal Trap

Note: When connecting traps to other sink brands use W131 adapter as in illustrations 3 & 5

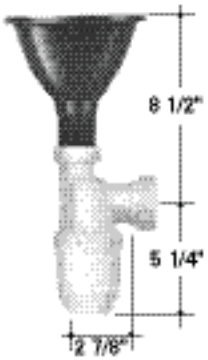

W497 6" x 3" oval cup sink to W501 or W511 Universal trap

7

1-W497 6" x 3" Oval cup sink

1-W501 or W511 Universal Trap

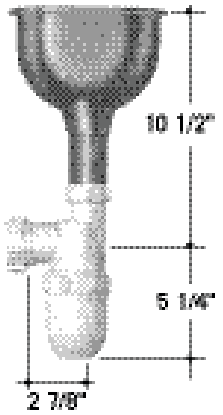

W401 6" round cup sink to W5015 or W5115 Universal trap

8

1-W401 6" Round cup sink

1-W5015 or W5115 Universal Trap S-Type

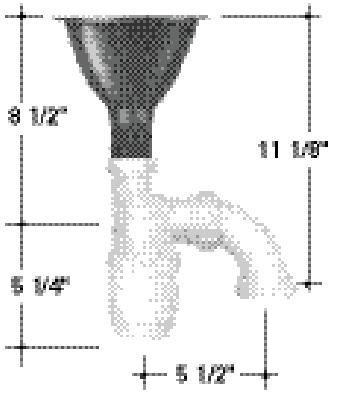

W497 6" x 3" oval cup sink to W5015 or W5115 Universal trap

9

1-W497 6" x 3" Oval cup sink

1-W5015 or W5115 Universal Trap S-Type

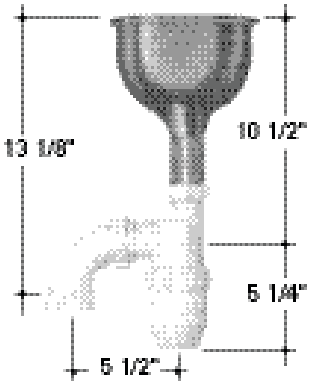

W1021 P trap to threaded sink outlet

10

1-Threaded sink outlet

1-W151 Female Adapter

1 pc. W001 pipe to length

1-W1021 1½" P Trap

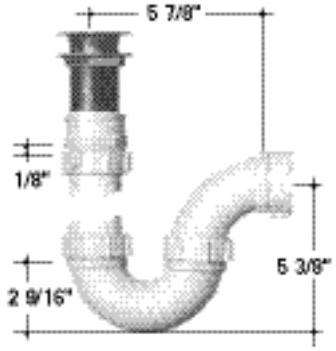

Long connection of Universal trap to threaded sink outlet

11

1-Threaded sink outlet

1-W151 Female Adapter

1 pc. W001 pipe cut to length

1-W141T Male Adapter

1-W501 or W511 Universal Trap

Note: Same assembly also used for long connections to sinks.

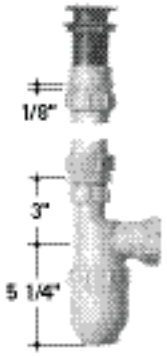

Connecting W1031 S trap to threaded sink outlet

12

1-Threaded sink outlet

1-W151 Female Adapter

1 pc. W001 pipe to length

1-W1031 1-1/2" S Trap

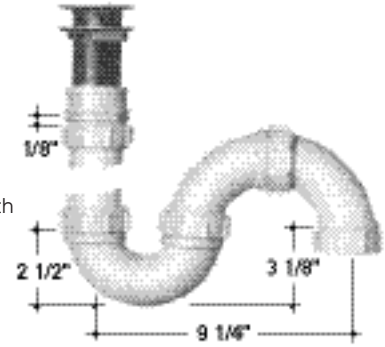

Compact assembly for turning drainline back to wall

13

1-Threaded sink outlet

1-W151 Female Adapter

1-W211 Loose Nut 1/8 Bend

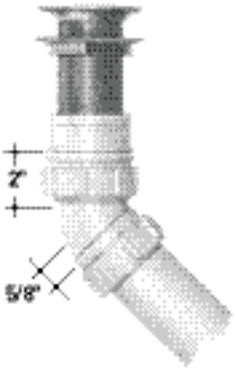

NOTES

SECTION SIX: DILUTION AND NEUTRALIZATION

Our complete range of tanks, dilution traps, solids interceptors and accessories are designed to neutralize chemicals found in laboratory, industrial and institutional wastes.

Dilution Traps

It is often necessary to dilute waste from individual sinks or small groups of sinks before discharging into the system. Our one-, two-and five-gallon dilution traps allow for convenient point-of-use dilution of this sink waste.

One-gallon capacity dilution traps have two 1-1/2" loose nut inlets and one 2" outlet. Various inlet configurations are possible and some are illustrated below. Dilution traps may serve several sinks or be used as a trap under a particular sink where more than usual dilution is desirable. Dilution traps may also be used as means of dilution.
If there is no requirement for the unit to incorcorate a trap mechanism, then the dip tubes can be removed; the unit now acts as a recovery trap only.

One-Gallon Dilution Trap

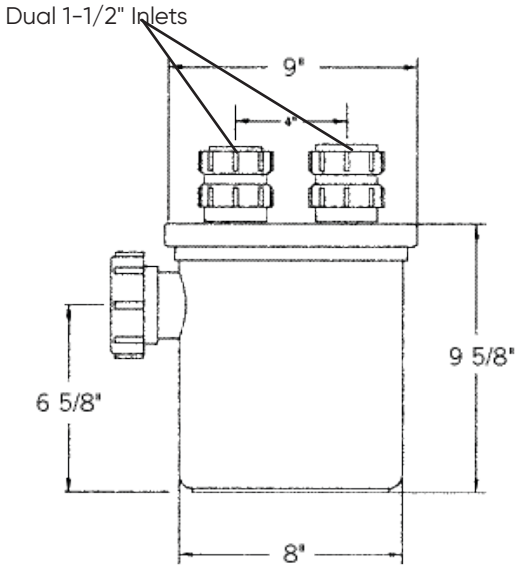

	Black
Part No.	W601

Two and Five-Gallon HDPE Dilution Basin

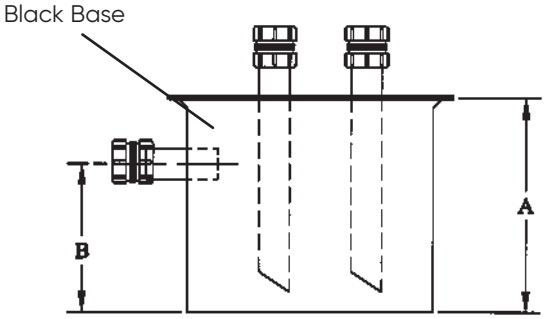

Part Number	Size (gallons)	Diameter (inches)	A (inches)	B (inches)
DB02 (rectangular)	2	8	8	8
DB05 (circular)	5	11	13	10

Options:

- One or Two Inlets
- 2-or 5-gallon capacity
- Connections available in 1-1/2" or 2" Mechanical Joint

Specify number of inlets and connection sizes when ordering

Dilution Trap / Basin Installation Procedure

- The dilution traps / basins should be situated close to or under the sinks.
- There are 2 x 1-1/2" mechanical joint inlet connections mounted on top of the trap / basin. This allows for up to 2 sinks to be connected to one dilution trap / basin. One inlet can be blanked off using cap (catalogue number: W461P) if only one sink is connected.
- The 2" mechanical joint located on the side of the trap / basin is the outlet.
- The trap / basin must be suitably supported from the base, this is required to prevent any undue stress being exerted on the fittings. Support can also be achieved by situating the trap / basin on the ground.
- The dilution trap / basin must NOT be filled with limestone chips. Limestone chips are only to be used in Neutralization Tanks.

NEUTRALIZATION

Neutralization of waste is necessary to protect the environment as well as attached piping systems. Ideally suited for this application, polypropylene and polyethylene tanks are a lightweight, durable and cost effective means of neutralizing this waste and offer advantages not found in tanks made from steel or molded stone. Polyethylene and polypropylene tanks are easier to handle, corrosion-free and easy to maintain.

IPEX offers a wide variety of tanks (2 to 2000 U.S. gallons) to neutralize harmful chemical waste. IPEX also offers a variety of equipment to keep tanks free of solids and insure proper flow of liquids through the system. To complete the neutralization system, equipment can be supplied that will monitor the waste exiting the tanks to ensure equipment is performing as intended, and alert personnel if there are system problems, such as improper neutralization or flow problems.

Neutratank options:

- Polypropylene or polyethylene construction
- Cylindrical or rectangular shapes
  Variety of sizes (2 - 2000 gallons)
- Bolted covers
- Standard, light traffic or medium traffic covers
- 8", 18", 22" threaded access ports
- Custom tank extensions
- Plain, male or female threaded or flanged connections
- Fiberglass wrapped tanks – for increased rigidity, aiding in direct burial applications
- Solids interceptors
- High/low liquid level alarms
- Inlet flow distributor
- Neutralizing limestone chips (available in 50 lb. bags)
- pH monitoring system

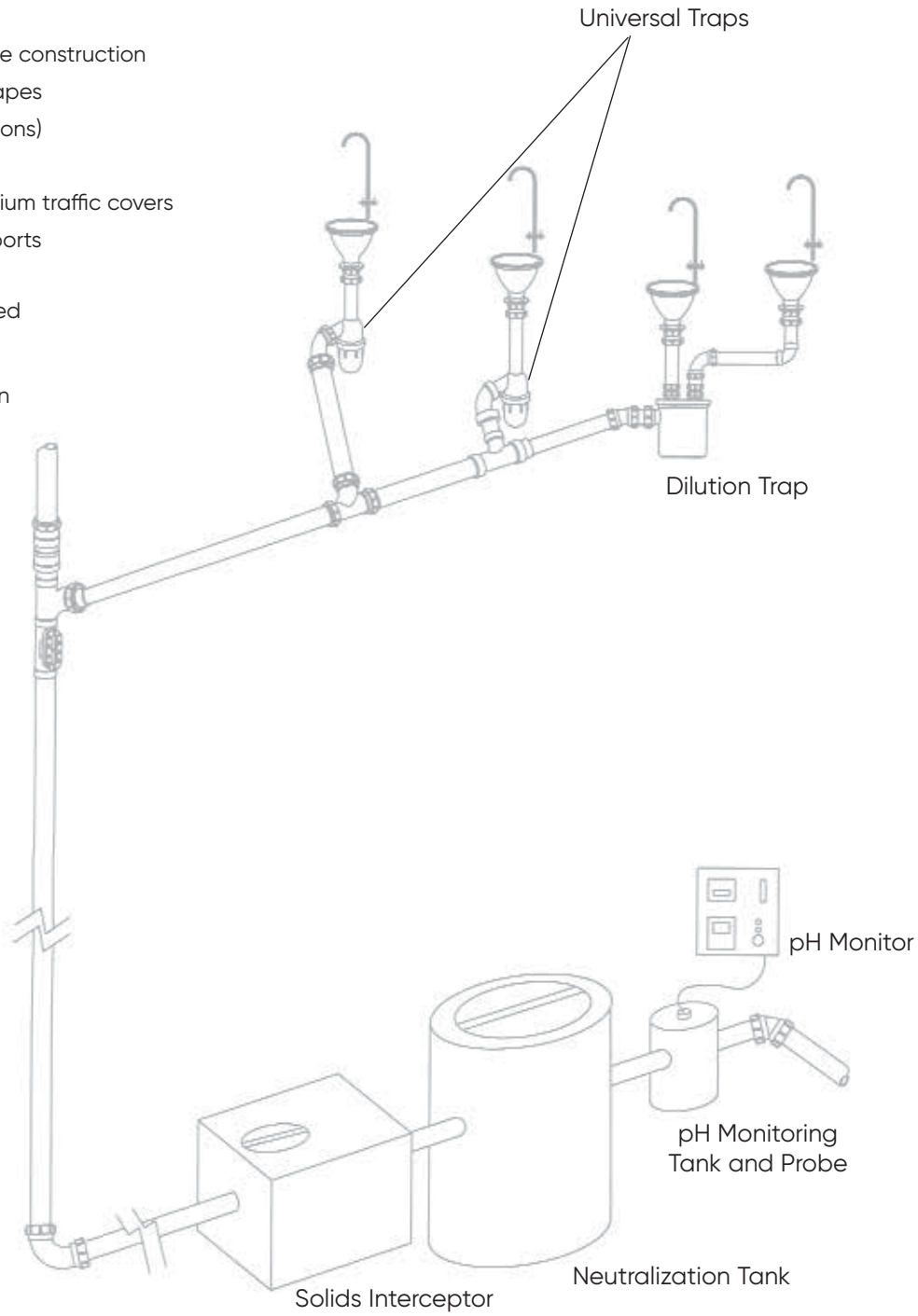

CYLINDRICAL TANKS – OPTIONS

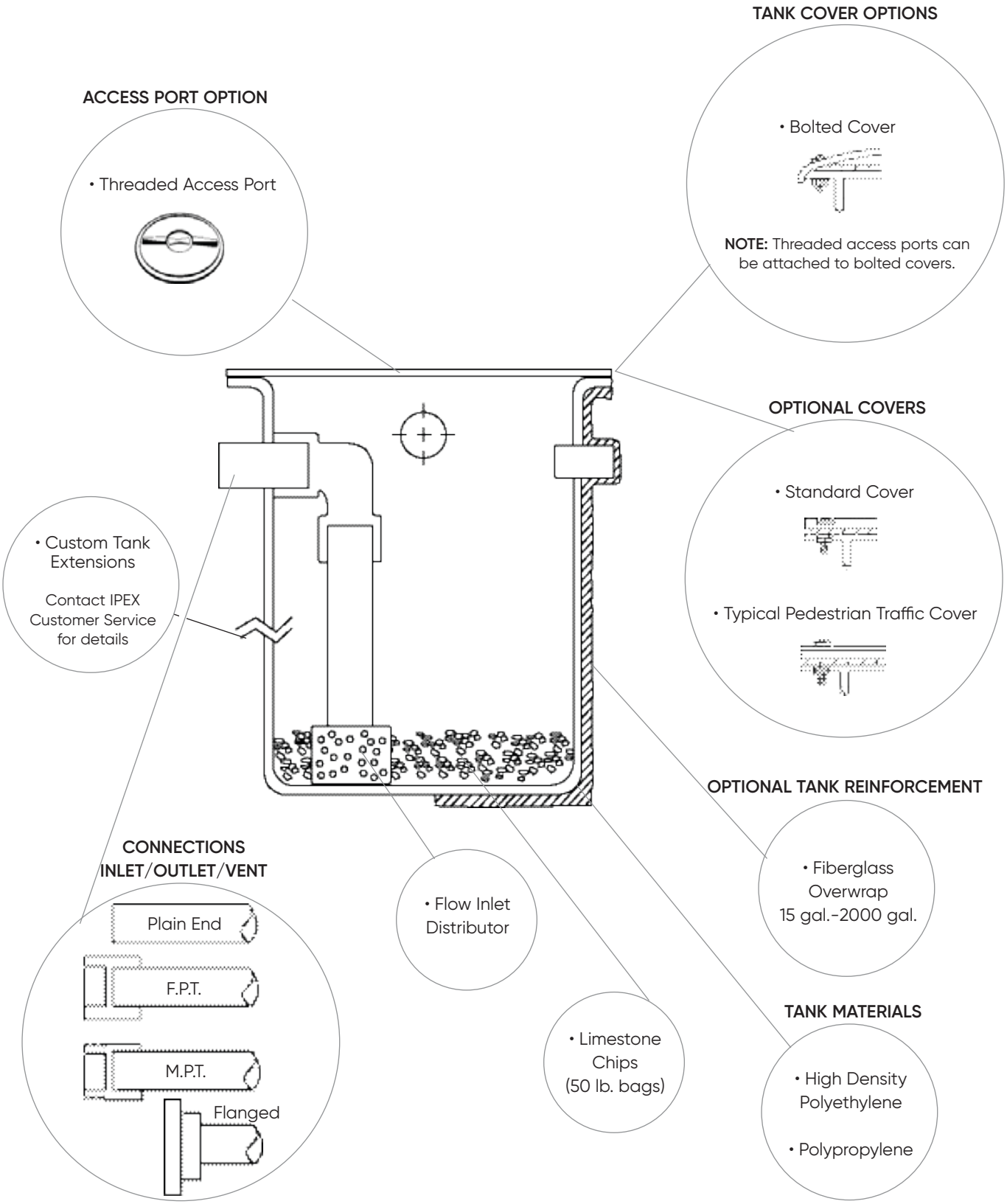

For details, see 'Options and Accessories' page in this section.

STANDARD CYLINDRICAL TANKS
COMPLETE AND FAX TO YOUR LOCAL IPEX CUSTOMER SERVICE CENTER

(SEE BACK COVER FOR CONTACT INFORMATION)

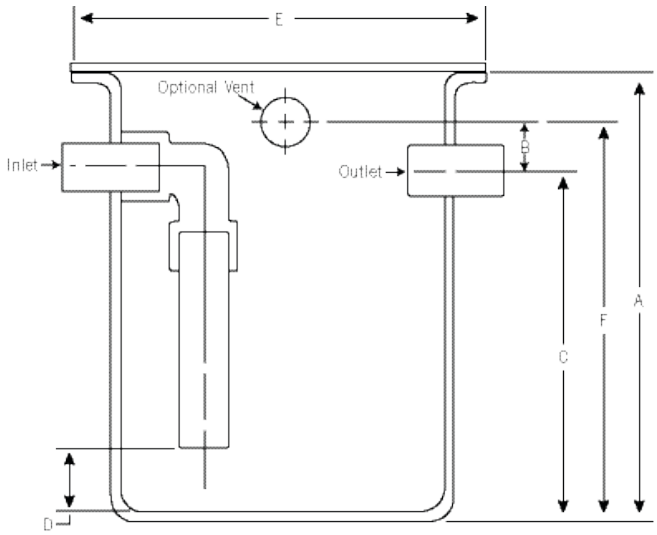

Threaded cover location if applicable. Cover is centered on 100 gallon and smaller tanks

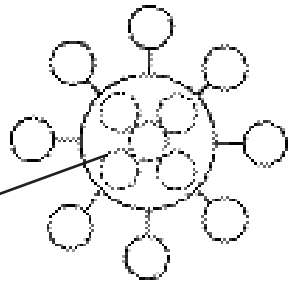

Mark desired location of connections by inserting an "I" for inlet, "O" for outlet and "V" for vent in the diagram.

Also indicate an "X" at the approximate location of threaded cover (if applicable).

Gal.	Dia. (in)	A (in)	B (in)	C (in)	D (in)	E (in)	F (in)	Extension Height (in)		Specify Inlet/ Outlet size (in)	Specify Vent size (in)
								Non-adjustable Extension	Variable Extension		
*5	11	14	2	10.5	2	15.5	12	6 to 9	6 to 36		
**7	11	21	2	16	2	12	18	6 to 9	6 to 36		
15	18	15	2	10	2	21.5	12	6 to 14	6 to 36		
30	18	29	2	22	3	23	24	6 to 24	6 to 36		
55	22	36	2	27	3	24.25	29	6 to 31	6 to 36		
100	28	42	2	36	4	32	38	6 to 35	6 to 36		
150	31	48	2	38	6	36.5	40	6 to 43	6 to 36		
200	36	48	2	38	6	40.5	40	6 to 43	6 to 36		
275	42	48	2	38	6	47	40	6 to 42	6 to 36		
360	48	48	2	38	6	51	40	6 to 42	6 to 36		
500	52	60	2	52	6	56	54	6 to 54	6 to 36		
*700	55	70	2	60	6	60	62	6 to 62	6 to 36		
*1000	66	72	2	62	6	72	64	6 to 64	6 to 36		
*1250	69	84	2	72	8	76	74	6 to 78	6 to 36		
*2000	84	84	2	72	8	91	74	6 to 78	6 to 36		

* Available only in HDPE ** Available only in PP

Company Name _____

Job Name _____

Date _____

Note: Custom sized tanks available upon request. Please contact IPEX for details.

Note: For vehicular traffic applications, IPEX recommends that tanks are installed below grade with access to the tank vault via DOT approved manhole covers.

TANK SPECIFICATIONS

MATERIAL

- ☐ Polypropylene w/no re-inforcement
- ☐ Polyethylene w/no re-inforcement
- ☐ Polypropylene w/FRP Wrap (15 gal. & >)
- ☐ Polyethylene w/FRP Wrap (15 gal. & >)

TANK COVERS

Non-load Bearing

- ☐ Standard Bolted Domed (not available in PP)
- ☐ HD Bolted Flat

Load Bearing

- ☐ 1/8" Smooth Finish Carbon Steel Pedestrian Traffic Cover
- ☐ 1/4" Diamond Finish Carbon Steel Pedestrian Traffic Cover

EXTENSION OPTIONS

- ☐ Non-Adjustable Extension™
- ☐ Variable Extension™

TANK EXTENSION

- ☐ Extension Height _____" (measured from top of standard tank)

ACCESS PORTS

- ☐ 8" Threaded Access Port
- ☐ 16" Threaded Access Port
- ☐ 22" Threaded Access Port

PIPE CONNECTIONS

	Inlet	Outlet	Vent
☐ Plain End	☐	☐	☐
☐ Female Thd	☐	☐	☐
☐ Male Thd	☐	☐	☐
☐ Flanged	☐	☐	☐

ACCESSORIES

- ☐ Inlet Flow Distributor
- ☐ High/Low Level Alarm
- ☐ Top Mount
- ☐ Side Mount
- ☐ Limestone Chips, qty of bags _____

RECTANGULAR TANKS – OPTIONS

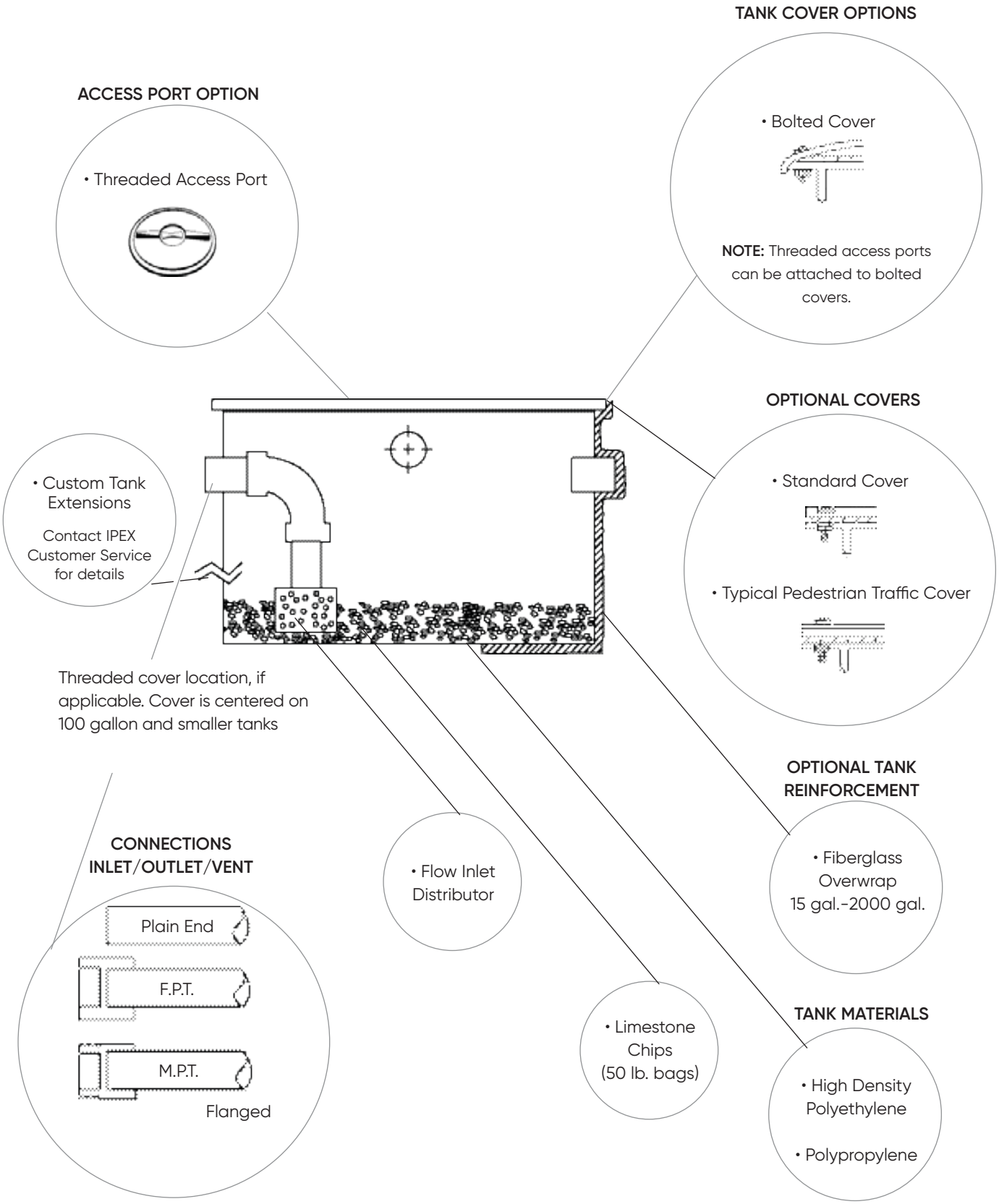

For details, see 'Options and Accessories' page in this section.

COMPLETE AND FAX TO YOUR LOCAL IPEX CUSTOMER SERVICE CENTER

(SEE BACK COVER FOR CONTACT INFORMATION)

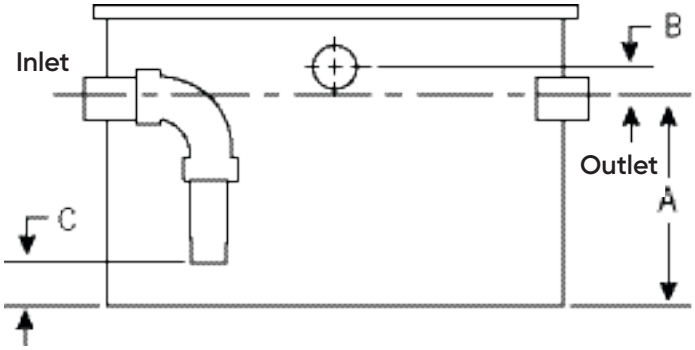

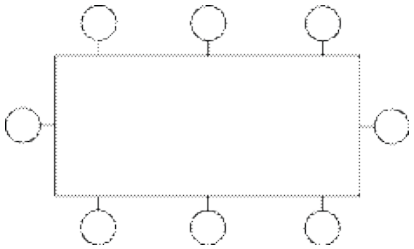

Mark desired location of connections by inserting an "I" for inlet, "O" for outlet and "V" for vent in the diagram.

Also indicate an "X" at the approximate location of threaded cover (if applicable).

Gal.	L x W x H (in)	A (in)	B (in)	C (in)	Extension Height (in) Non-Adjustable	Specify Inlet/ Outlet size (in)	Specify Vent size (in)
*2	8 x 8 x 8	5	1.5	2	n/a	1-1/2	
*5	10 x 16 x 8	5	1.5	2	4		
15	12 x 24 x 12	7	2	4	6 to 8		
30	12 x 24 x 24	18	2	4	6 to 20		
55	24 x 30 x 18	12	2	4	6 to 12		
115	30 x 30 x 30	24	2	4	6 to 24		
*150	24 x 48 x 30	24	2	4	6 to 24		
*215	36 x 36 x 42	36	2	4	6 to 36		
*265	36 x 72 x 24	18	2	4	6 to 20		
*400	36 x 72 x 36	30	2	4	6 to 30		
*540	36 x 72 x 48	42	2	4	6 to 42		
*670	36 x 72 x 60	54	2	4	6 to 54		

* Available only in HDPE

Note: Customized tanks available upon request. Please contact IPEX for details.

Company Name _____

Job Name _____

Date _____

Note: For vehicular traffic applications, IPEX strongly recommends that tanks are installed below grade with access to the tank vault via DOT approved manhole covers.

TANK SPECIFICATIONS

MATERIAL

- ☐ Polypropylene w/no re-inforcement
- ☐ Polyethylene w/no re-inforcement
- ☐ Polypropylene w/FRP Wrap (15 gal. & >)
- ☐ Polyethylene w/FRP Wrap (15 gal. & >)

TANK COVERS

Non-load Bearing

- ☐ Standard Bolted Domed (not available in PP)
- ☐ HD Bolted Flat

Load Bearing

- ☐ 1/8" Smooth Finish Carbon Steel Pedestrian Traffic Cover
- ☐ 1/4" Diamond Finish Carbon Steel Pedestrian Traffic Cover

ACCESS PORTS

- ☐ 8" Threaded Access Port
- ☐ 16" Threaded Access Port
- ☐ 22" Threaded Access Port

TANK EXTENSION

- ☐ Extension Height _____" (measured from top of standard tank)

PIPE CONNECTIONS

	Inlet	Outlet	Vent
☐ Plain End	☐	☐	☐
☐ Female Thd	☐	☐	☐
☐ Male Thd	☐	☐	☐
☐ Flanged	☐	☐	☐

ACCESSORIES

- ☐ Inlet Flow Distributor
- ☐ High/Low Level Alarm
- ☐ Top Mount
- ☐ Side Mount
- ☐ Limestone Chips, qty of bags _____

OPTIONS AND ACCESSORIES

Standard Domed HDPE Cover

Slightly domed – NO Traffic - Non Load Bearing

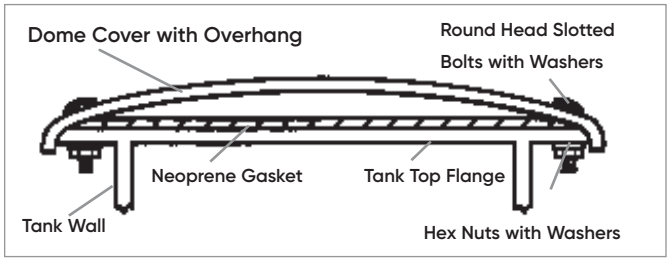

HD Bolted Flat Cover

NO traffic – Non load bearing for Flush Floor Installations

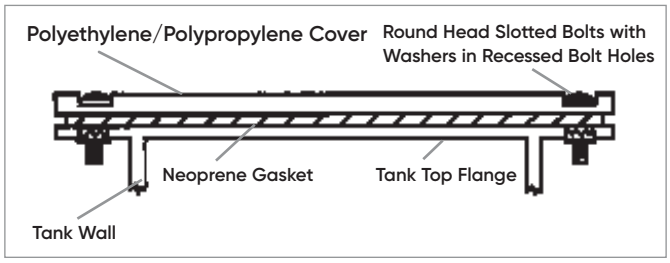

Steel Pedestrian Traffic Cover - Walking Only

Typical configuration for pedestrian traffic cover

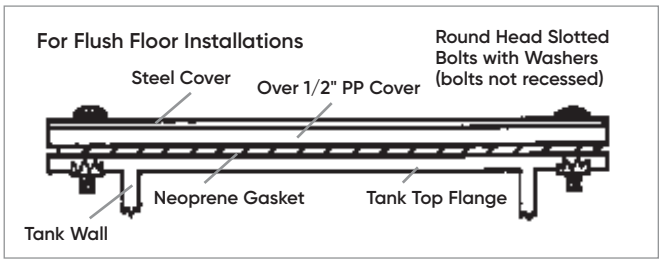

Threaded Manway

Threaded ports can be incorporated into all non traffic – non load bearing covers. They are available in three sizes: 8", 16" and 22" diameter.

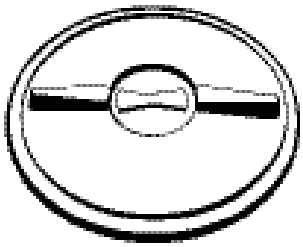

Level Alarm

Poor flow through a tank can often indicate a clogging problem in the piping or in the tank itself. Our Hi/Low level alarms sense when the liquid level in the tank is above or below the desired level and then sound an alarm to indicate there is a problem. These alarms can be installed in most any tank and can be fitted with either an audio or visual alarm indicator.

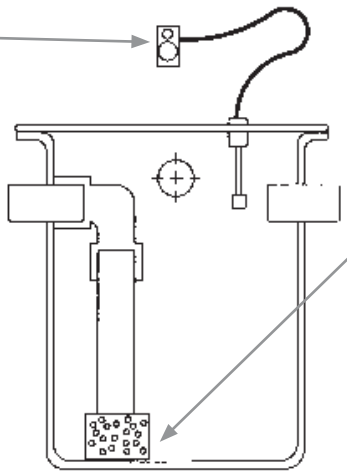

Inlet Flow Distributor

The Inlet Flow Distributor provides the following functions:

- even distribution of waste from the inlet
- greater efficiency of the limestone bed
- prevents limestone chip backup into inlet

NEUTRATANK EXTENSIONS

Neutratank Adjustable Extension

Designed for easy access to direct bury tanks, the Variable Extension's steel cover and poly sidewall body allows for 2" of vertical adjustment for leveled installation regardless of grade changes. The 1/4" thick steel floor plate cover and frame, suitable for installation in finished floors, are rated for heavy duty pedestrian traffic and are provided with a 16" threaded manway for ease of maintenance and inspection.

Features & Benefits:

- Allows easy access to direct bury tanks
- 1/4" thick steel floor plate cover and frame suitable for installation in finished floors
- Cover is rated for heavy duty pedestrian traffic
- Steel cover and poly sidewall have 2" of vertical adjustment
- Extension heights are 6" to 36" (contact factory for extensions exceeding 36")
- Neutratank poly cover provided with 16" threaded manway for ease of maintenance and inspection
- Poly sidewall protects tank lid during backfill and keeps tank lid free of debris for maintenance and inspection

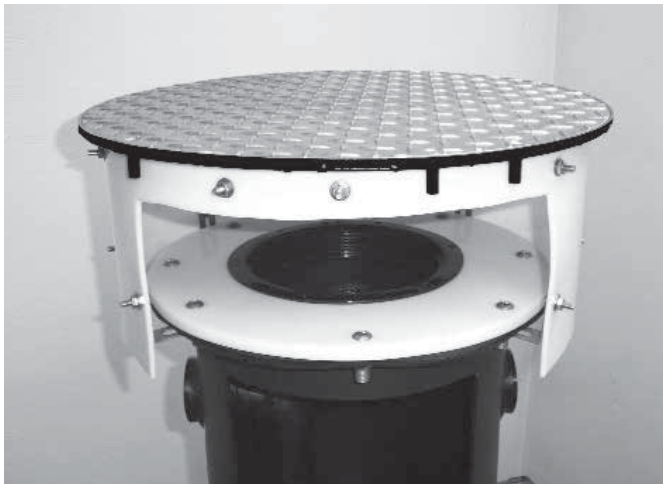

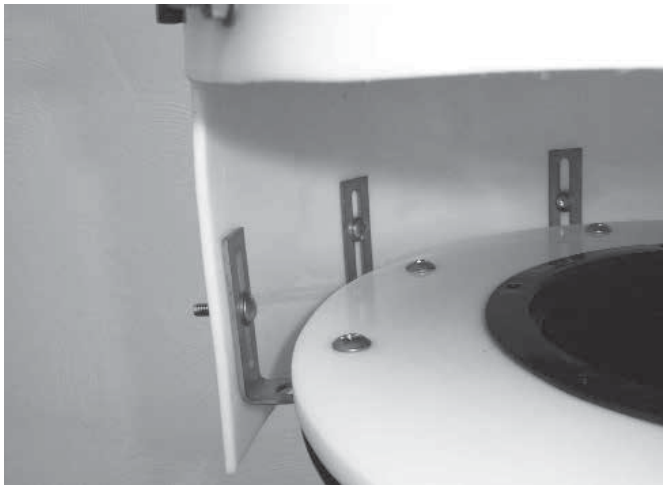

Neutratank Non-adjustable Extension

Designed for easy access to tanks with deep bury depths, the Non-Adjustable Extension is manufactured to your specific site conditions.

Features & Benefits:

- proprietary method of seaming extensions together provides exceptionally strong joints
- non-adjustable tank extensions are manufactured to specific site conditions
- allows easy access to tanks with deep bury depths
- tanks can be FRP wrapped for direct bury applications
- extended tanks are available with standard domed, HD bolted flat, or steel pedestrian traffic covers
- available in both HDPE and Polypropylene
- standard extension heights are offered and are determined from the top of standard tank

Tank Size (Gallons)	Extension Length (Inches)
5 / 7	6 to 9
15	6 to 14
30	6 to 24
55	6 to 31
100	6 to 35
150	6 to 43
200	6 to 43
275	6 to 42
350	6 to 42
500	6 to 54

SOLIDS INTERCEPTION

Grease, hair, lint and other laboratory debris can enter the waste system and often cause clogging and system back-ups. Solid waste can build up in the system which can lead to flooding and damage to the piping. If the solids are not removed from the system at the source, they can lead to permanent stoppages in the piping. The stoppages in the system will lead to costly and inconvenient cleanings and possible replacement of the piping. IPEX manufactures a line of solids interceptors which will filter out these solid waste products prior to entering the main piping system. Standard units are manufactured from high-density polyethylene. Propropylene units are available upon request.

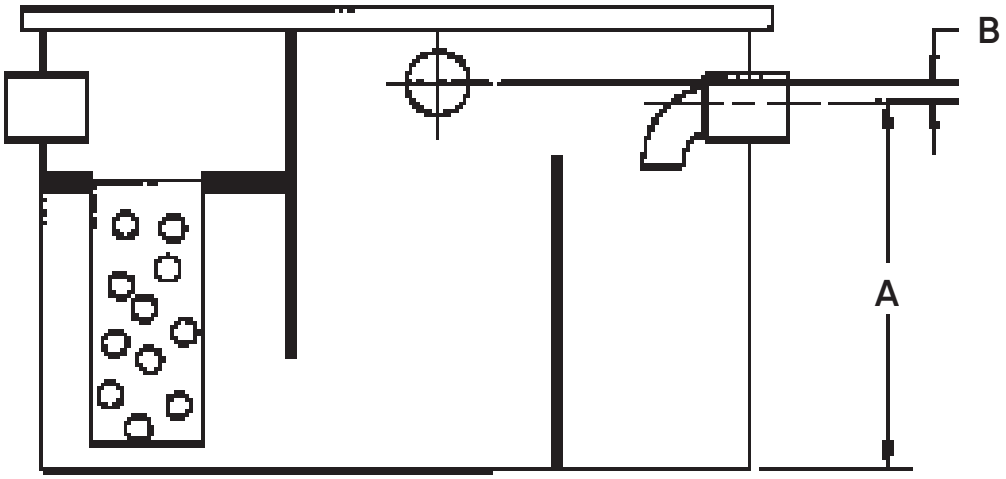

Options:

- Inlet Filter Basket
- Bolted or Welded Cover
- Access Port
- Optional Vent

Part Number	Size (gallons)	Diameter (inches)	A (inches)	B (Inches)
SI14	14	12 x 12 x 24	18	1-1/2
SI44	44	18 x 24 x 24	18	1-1/2
SI75	75	24 x 24 x 30	24	1-1/2

NEUTRASYSTEM 2™

pH Monitoring, Recording, and Alarm System

Neutrasystem 2 ensures that discharges into the sewer are maintained within acceptable pH parameters by neutralizing the acidic waste with limestone chips. The system continuously samples the downstream flow while keeping an accurate, permanent record of pH discharge levels (optional). The monitoring device will warn maintenance personnel, (visually and audibly), when pH discharges outside acceptable parameters are sensed. Once alerted, maintenance personnel can quickly and easily recharge the main IPEX Neutratank with limestone chips through the access cover incorporated into the tank's design.

The system incorporates the following features:

- UL 508 Listed, NEMA 4X enclosure with hinged front, padlockable hasps, and wall mount flange
- 110/120 VAC input power supply (1.2flA) with 2 amp fuse with blown fuse indicator and resettable GFCI.
- Key lock off-on switch on door.
- Control power has 2 amp fuse with blown fuse indicator (24VDC class 2).
- Intermittent alarm horn, (sonalert type), and alarm silencing switch. The alarm horn is activated when the probe senses a pH above or below the set parameters, and will remain on until the alarm silencing switch is activated.
- Ethernet output for pH level and alarm in current time. (optional)
- Data logger to record pH values with date and time (optional)
- Large 4 digit pH value display with operator buttons for alarm settings

  (High pH value, Low pH value to energize the alarm)
- "Power ON" white LED pilot light.
- "pH HIGH Alarm" LED red light/ button to press to acknowledge.
- "pH LOW Alarm" LED red light/ button to press to acknowledge.
- Series 6510 submersible, pH electrode with chemically resistant CPVC body, viton O-rings and twist- lock connection providing easy maintenance
- 5-gallon high density polyethylene, one-piece construction, rotationally molded sample tank.

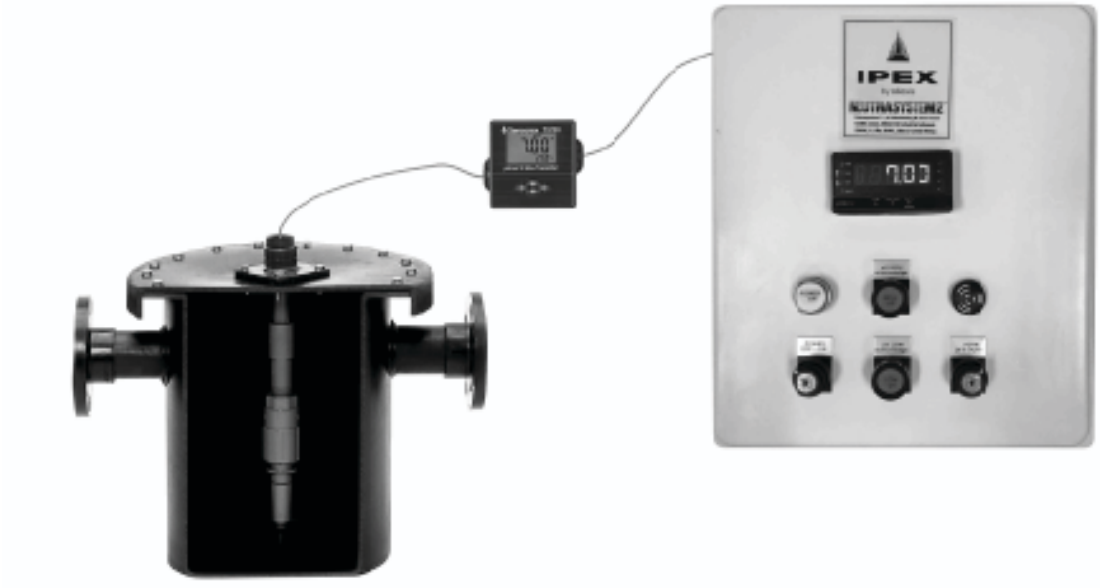

NEUTRASYSTEM 2™

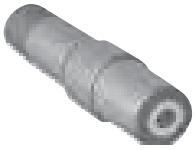

IPEX NEUTRASYSTEM 2 uses a CPVC submersible electrode (sensor) with automatic temperature compensation. The sensor has a flat surface junction to minimize fouling. The reference is sealed to minimize dryout and eliminate refilling solution. The sensor is connected to a preamplifier via a 1/4 turn quick disconnect. The preamplifier has an attached cable (25') and comes preattached to the pH calibrator that can be mounted near the tank (wall mount plate attached; other mounting options available with included hardware: pipe mount, DIN rail mount, panel mount).

pH Electrode

Storage

The pH electrode is shipped in a soaker bottle containing a solution of pH 4 buffer and potassium chloride. The electrode should remain in the bottle until it is ready to use. If the electrode is used infrequently, the cap, bottle and solution should be saved and the electrode stored in it. Store the pH electrode in a pH 4 buffer solution if the soaking solution is discarded. Do not use distilled or deionized water as this will drastically reduce the electrode lifespan. Remove the cap and o-ring on the soaker bottle before use.

Maintenance

pH electrodes have a thin glass surface. Care should be taken so that the glass does not become scratched or broken. After exposure to a sample, buffer or rinse solution, carryover can be minimized by blotting – never by wiping – the electrode with a clean, non-abrasive paper or a clean cloth towel. Do not use a brush on pH glass. As a rinse solution, use a part of the next sample or buffer which is to be measured. This action will also minimize contamination from carryover.

Replacement

All pH electrodes age with time. Aging is characterized by shortened span and slower speed of response. Electrodes should be replaced when their readings cannot be corrected by the meter's controls and/or when their speed of response is too slow for the application for which they are being used. The frequency of electrode replacement is a function of the application; electrodes operating in hot liquids at very high or very low pH values will have shorter lives than those operating at neutral pH and ambient temperature. Coatings on an electrode's surface prevent new liquids from contacting an electrode's measuring surface and can mimic the effects of electrode aging. Before concluding that an electrode needs replacing, check its surface for coatings.

Calibration

The frequency of calibration is solely the responsibility of the user. At a new installation, calibration might be checked every few hours or shift, with the calibration changes noted in a log. As a pattern of longer stability is found, the time between calibration checks can be increased to once a day or once a week. Once a week is the longest recommended interval between calibrations.

- The pH electrode and pH controller should always be calibrated as a system.
- Only buffer solutions of 4, 7 and 10 are acceptable.
- Before placing the electrode in a new buffer, use an absorbent paper towel or clean absorbent cloth to blot – not wipe – off any liquid that clings to the electrode. This action will minimize carryover that could contaminate the buffer.
- Always use fresh buffers. Safely dispose of the buffers after they have been used for calibration. Do not return them to their bottles. This action could contaminate the buffers.
- Stir the electrode in the buffer to make sure that the fresh buffer quickly reaches the electrode's measuring surface.
- Allow time for the reading to stabilize. In general, with new electrodes, stable readings in the buffer solution are obtained in 10-15 seconds.

Cleaning

Coating of an electrode's measuring surface can lead to incorrect readings, including shortened span and slower response times. The type of coating determines the type of cleaning technique. When using chemicals or solvents, care should be taken and appropriate eye, face, hand and/or respiratory protection should be used.

Soft Coatings can be removed by vigorous stirring, by use of a squirt bottle or, very carefully, by gently wiping with a soft, clean non-abrasive paper or cloth. Do not use any brush or abrasive cleaner on pH glass.

Hard Coatings should be chemically removed. The chemical used to remove the coating should be the least harsh chemical that dissolves the coating in one or two minutes and does not attack the electrode's material of construction.

Oily or Organic Coatings are best removed with detergents or an appropriate solvent that does not attack the electrode's material of construction.

NOTE: For detailed Operating, Maintenance and Calibration Procedures for Neutrasystem 2, please contact IPEX.

NEUTRALIZATION TANK SIZING AND MAINTENANCE

The size of the neutralization tank is a function of the number of sinks and drains that are discharged into the system. According to ASPE, tanks are sized to provide a minimum "dwell time" of 2-1/2 to 3 hours. Based on this dwell time, ASPE has developed a sizing table which is summarized and can be used as a guide in selecting the proper size tank. Tanks should not be sized based on the number of sinks or drains alone. Certain types of waste may require particular needs and may not fall within the standard sink to tank ratio. Other factors that can affect the tank size are not limited to, but inclusive of: the amount of flow through the system, the type of chemicals and the size of the system piping. A qualified engineer should make the final determination of the tank size.

Maintenance

The limestone chips supplied by IPEX are 1" to 3" in diameter and have a calcium carbonate content certified to be in excess of 90%. Water should always be added to the tank to help facilitate dilution. A maintenance schedule should be established to observe and maintain proper levels of limestone in the tank. Limestone replacement should be performed at regular intervals. Typically, once every one to three months is sufficient, however, these intervals can be increased or decreased based upon application needs and performance. Factors affecting limestone replacement are waste flow rates, pH levels, chemical composition and operating temperatures. Solids in the waste stream can plug the tank and should be avoided.

NOTE: There are many variables that affect neutralization and dilution of chemicals discharged through a system. Professional assistance should be employed in analyzing the effluent and the necessary maintenance service frequency.

Tank Size and Limestone Loading Chart

Number of Sinks	Tank Size (gallons)	Limestone Loading for Neutralization (lbs)
2	5	50
4	15	125
8	30	250
16	55	500
30	100	1000
40	150	1500
60	200	2000
75	275	2500
110	360	3500
150	500	5250
215	700	8000
275	1000	10000
315	1250	12000
500	2000	18000

Neutralization Tank Sizing Example

A manufacturing process has a discharge cycle that activates a discharge pump for 5 minutes every 30 minutes. The pump capacity is 10 gpm. The acid waste is then directed into the acid waste drainage pipe system. The piping system must therefore be capable of conveying 100 gallons/hour. What size neutratank would be necessary to neutralize this discharged acid waste?

Design Requirements:

- Pump capacity 10 gpm
- Pump operates for 5 minutes every 30 minutes
- Flow rate max 100 gallons/hour

Assumptions:

1. Nameplate tank capacity is reduced by 20% due to position of inlet and outlet.
2. Limestone distribution further reduces available liquid volume by 65%. This may vary by random mixture or stone sizes, settling or dissolving of the stones.
3. Dwell time design for a pH1 is between 2.5 and 3 hours to result in an effluent between a pH of 4 and 7.5.

Solution:

- require tank to have a liquid capacity of 250 gallons (100 gal/hr x 2.5 hrs)
- Tank total liquid volume capacity is 250 gallon/.35 = 714 gallons
- Nameplate capacity due to inlet and outlet is 714/.80 = 892 gallons
- Recommendation is 1000 gallon tank or 2 – 500 gallon tanks in parallel

Piping Tanks in Parallel

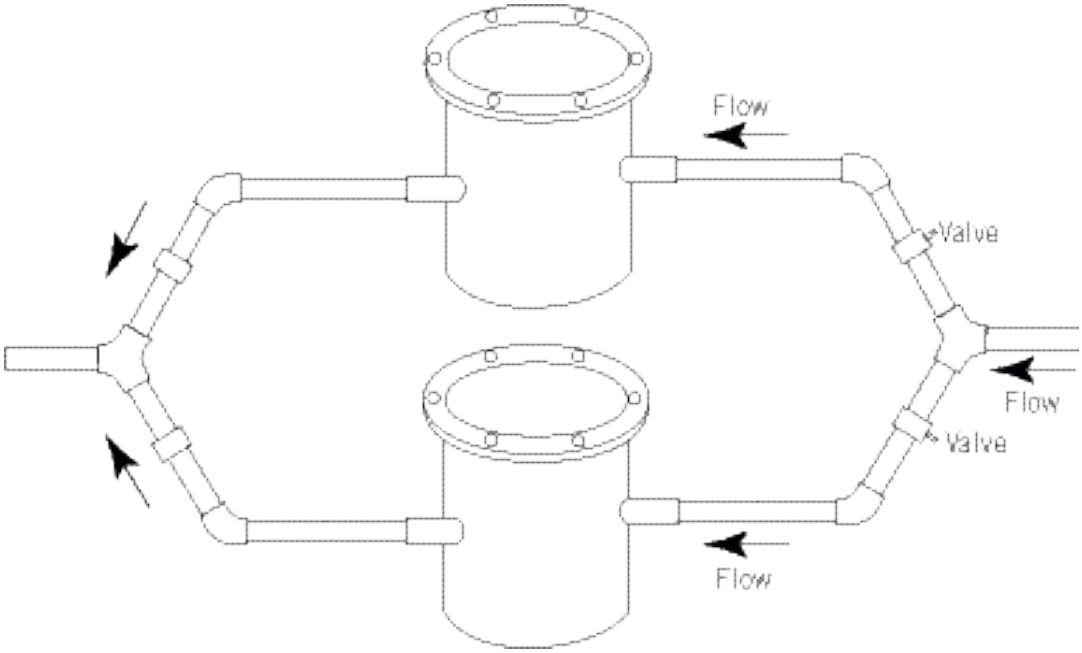

NEUTRALIZATION TANK INSTALLATION

Exercise care when handling neutralization tanks. Damage may occur if the tank is dropped, dragged, or collides with sharp corners or objects. Improper handling of the tank during installation can cause structural failure.

Neutratank Installation and Application Advice

1. Tanks must be placed on a flat, solid surface allowing uniform, full support to the tank bottom. Such surfaces may be basement floors, concrete pads or compact, stone-free sand beds.
2. The tank itself must not be used to support manhole covers, traffic of any kind or heavy equipment.
3. Do not support the tank by inlet, outlet, vent or any connecting piping.
4. Do not place any weight on tank fittings or connecting piping.
5. Depending upon effluent content, HDPE tanks may be used at temperatures up to 140°F (60°C). Polypropylene tanks may be used at temperatures up to 212°F (100°C).
6. Where possible, fill the tank with water prior to introducing the limestone and media.
7. Tank insulation may be considered for outdoor installation in cold environments.

Buried Tank Installation

Tanks must be fully supported on the base by either an appropriate concrete pad that allows no overhang or a compacted stone free sand bed.

Buried tanks must be filled with water prior to backfilling. Tank tops are non-load bearing and should have a trap door or access cover over them supported by a foundation or by the ground. They cannot be supported by the top of the tank. The backfill material shall be free of stones and foreign matter and shall be capable of passing a No. 10 screen. The depth of this backfill should be 6" to 8" thick around the tank and then normal backfill material may be used. Mechanical tamping is not recommended. Care must be exercised during the backfilling procedure to prevent inward buckling of the tank.

For **tanks with extensions**, the above procedure should be followed up to or slightly above water level and from that point on up to ground level it is recommended that a 4" thick concrete sleeve be poured around the tank in multiple lifts. If this is not feasible then the normal backfill procedure may be used, up to 36" height above water level, bearing in mind that backfilling will produce inward pressures on the empty portion of the tank. Care must be exercised during this operation to prevent inward buckling.

In areas with **high water tables**, **subject to flooding**, or **poor soil conditions**; IPEX recommends tanks be secured within a concrete vault, or a 4" thick concrete sleeve poured around the tank in multiple lifts. If the tank is to be used as a pump-out holding tank or similar type of operation or the tank will be left empty or partially full, then IPEX recommends that tanks be secured within a concrete vault.

IPEX recommends that tanks should never be buried directly in the ground unless they are wrapped in fiberglass. IPEX can supply fiberglass wrapped tanks upon request.

These recommendations should always be referenced against the local authority having jurisdiction.

Testing

Tanks must NOT be subjected to pressure or vacuum including hydro-testing. Test tank by filling with water prior to use and inspect for any leaks.

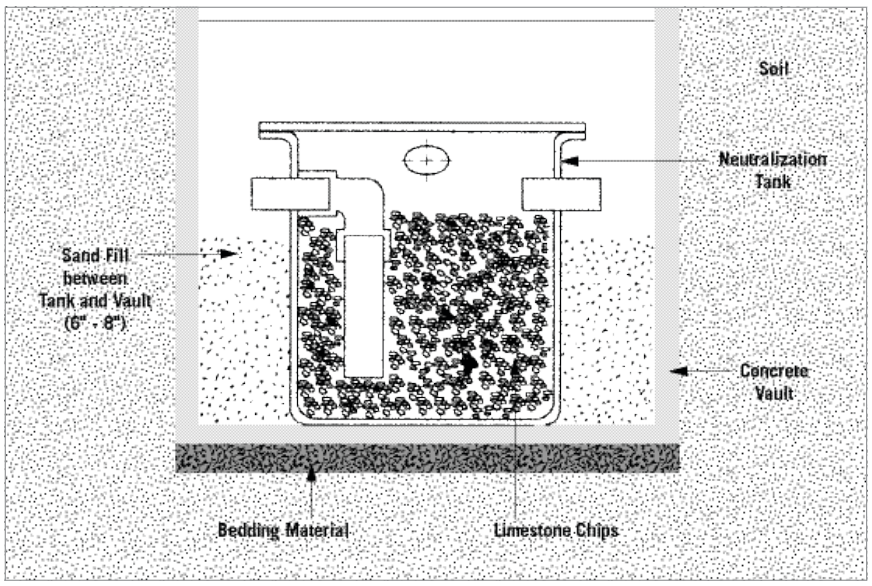

NOTES

ENFIELD™ SPECIFICATIONS

Enfield Long Form

General

Acid waste drain and vent system, as shown on drawings, shall be NSF listed and CSA certified Schedule 40, polypropylene as manufactured by IPEX. System to include pipe supplied in 10 ft. lengths (or 20 ft lengths if NFRPP is specified), fittings, traps and neutralization tanks from the same manufacturer. It shall also include recommended adapters to connect to other piping materials, where applicable.

Material

Pipe shall be made from NSF listed Type 110 or 210, flame retardant polypropylene conforming to ASTM D4101, with a maximum average flame spread of zero seconds and a maximum extent of burning of 13 mm, in accordance with ASTM D635. Matched fittings shall be made from NSF listed flame retardant polypropylene with average maximum burn time of 80 seconds and maximum extent of burning of 20 mm in accordance with ASTM D635.

If NFRPP pipe is specified, it shall be made from NSF 14 listed and CSA certified Schedule 40 PP as manufactured by IPEX. Pipe shall comply with ASTM F1412 and material used shall comply with the material requirements of ASTM D4101.

Fittings

Fittings shall be NSF listed and have an integral heavy gauge, nickel/chrome electrical resistance wire molded in place in the fitting body. Copper wire elements, loose wire or other loose joint components, are prohibited. Fittings shall be Enfield or approved equal.

Joints

Connections between polypropylene pipe and fittings shall be made using the Enfield joint. All joints shall have a fusion cycle controlled by a microprocessor operated, waterproof, Enfusion control unit equipped with input and output voltage sensors, ambient temperature sensors to automatically adjust fusion time and audible alarms to indicate cycle interruptions and completion of the joining process. The unit shall be capable of fusing multiple joints and with a minimum capability of six 2" joints with the same fusion time as a single joint.

Connections between polypropylene and other piping materials shall be made using Enfield adapters according to manufacturer's (IPEX) recommendations. All electrofusion machines shall be third party certified by UL and CSA.

Installation and Testing

Installation and testing shall be in accordance with the contract drawings, the manufacturer's recommendations and the local plumbing codes. Testing with compressed air is prohibited. The entire system shall be installed free of stress and in proper alignment. Horizontal supports shall provide a wide bearing area and be free of burrs or sharp edges. Support spacings shall be in accordance with the manufacturer's recommendations and local plumbing codes. Vertical piping shall have riser clamps at each floor. Pipe supports should be installed so that horizontal piping is in uniform alignment and with a uniform slope of at least 1/8" per foot, or in accordance with the local plumbing codes.

Enfield Short Form

Acid waste drainage and vent system shall be NSF listed and CSA certified Schedule 40, flame retardant polypropylene joined by Enfield resistance wire, as manufactured by IPEX. All fittings shall have integral nickel/chrome resistance wire with no loose components. Jointing shall be controlled using a UL and CSA certified microprocessor operated Enfusion Control Unit incorporating self diagnostics and automatic audible alarms to indicate circuit defaults and joint completion, plus allow multiple jointing of fittings at the same fusion time as a single joint. Installation and testing shall be in accordance with the contract drawings, the manufacturer's recommendations and the local plumbing codes.

LABLINE™ SPECIFICATIONS

Labline Long Form

General

Acid waste drain and vent system, as shown on drawings, shall be NSF listed, Schedule 40, polypropylene as manufactured by IPEX to include pipe supplied in 10 ft. lengths (or 20 ft lengths if NFRPP is specified), and matched fittings, traps and neutralization tanks from the same manufacturer. It shall also include recommended adapters to connect to other piping materials, where applicable.

Material

Pipe shall be made from NSF listed Type 110 or 210, flame retardant polypropylene conforming to ASTM D4101, with a maximum average flame spread of zero seconds and a maximum extent of burning of 13 mm, in accordance with ASTM D635. Matched fittings shall be made from NSF listed flame retardant polypropylene with average maximum burn time of 80 seconds and maximum extent of burning of 20 mm in accordance with ASTM D635.

If NFRPP pipe is specified, it shall be made from NSF 14 listed and CSA certified Schedule 40 PP as manufactured by IPEX.

Pipe shall comply with ASTM F1412 and material used shall comply with the material requirements of ASTM D4101.

Fittings

Fittings shall be NSF listed, be of all plastic construction and be designed to lock into a machined groove on the mating piping. All fittings shall have integrally molded union connections. No metallic grab rings or clamps shall be allowed. Fittings containing EVA (ethylene vinyl acetate) are strictly prohibited. Couplings shall not be added to make mechanical joint fittings. Fittings shall be Labline or approved equivalent.

Joints

Connections between polypropylene pipe and matched fittings shall be made using the Labline Joint.

Installation and Testing

Installation and testing shall be in accordance with the contract drawings, the manufacturer's recommendations and the local plumbing codes. Testing with compressed air is prohibited. The entire system shall be installed free of stress and in proper alignment. Horizontal supports shall provide a wide bearing area and be free of burrs or sharp edges. Support spacings shall be in accordance with the manufacturer's recommendations and local plumbing codes. Vertical piping shall have riser clamps at each floor. Pipe supports shall be installed so that horizontal piping is in uniform alignment and with a uniform slope of at least 1/8" per foot, or in accordance with the local plumbing codes.

Labline Short Form

Acid waste drainage and vent system comprising pipe, matched fittings, neutralization tanks and adapter fittings shall be from a single source. Pipe shall be NSF listed, flame retardant, schedule 40 polypropylene and be joined by Labline fittings. All fittings shall be NSF listed and be of an all plastic construction, but must not contain components made from EVA, (ethylene vinyl acetate). Installation and testing shall be in accordance with the contract drawings, the manufacturer's recommendations and the local plumbing codes.

PLENUMLINE™ SPECIFICATIONS

Plenumline Long Form

General

Acid waste drain and vent system, as shown on drawings, shall be IAPMO listed, Schedule 40, FR-PVDF as manufactured by IPEX to include pipe supplied in 10 ft. lengths and matched fittings, traps and neutralization tanks from the same manufacturer. It shall also include recommended adapters to connect to other piping materials, where applicable.

Material

Pipe and fittings shall be made from Kynar 740-02, flame retardant PVDF conforming to ASTM F 1673, with a limiting oxygen index (LOI) of 60. Kynar 740-02 resin based on testing to ULC S102.2 must have a flame spread rating of not greater than 25 and a smoke development classification of not greater than 50.

Fittings

Fittings shall be third party certified to ASTM F 1673, ASTM E84, ULC S102.2 and IAPMO approved, be of all plastic construction and a tapered elastic retaining ring shall be designed to lock into a machined groove on the mating piping. All fittings shall have integrally molded union connections. No metallic grab rings or clamps shall be allowed. Fittings shall be Plenumline™ or approved equal.

Installation and Testing

Installation and testing shall be in accordance with the contract drawings, the manufacturer's recommendations and the local plumbing codes. Testing with compressed air including air booster over water is prohibited. The entire system shall be installed free of stress and in proper alignment. Horizontal supports shall provide a wide bearing area and be free of burrs or sharp edges. Support spacings shall be in accordance with the manufacturer's recommendations and local plumbing codes. Vertical piping shall have riser clamps at each floor. Pipe supports shall be installed so that horizontal piping is in uniform alignment and with a uniform slope of at least 1/8" per foot, or in accordance with the local plumbing code requirements.

Plenumline Short Form

Acid waste drainage and vent system comprising pipe, matched fittings, neutralization tanks and adapter fittings shall be from a single source. Pipe shall be NSF listed, flame retardant, schedule 40 PVDF and be joined by Plenumline fittings. All fittings shall be NSF listed and be of an all plastic construction, but must not contain components made from EVA, (ethylene vinyl acetate). Installation and testing shall be in accordance with the contract drawings, the manufacturer’s recommendations and the local plumbing codes.

NEUTRATANK™ NEUTRALIZATION TANKS SPECIFICATIONS

Neutralization Tank

Contractor shall furnish and install HDPE (Polypropylene) Neutralization Tank. Tank shall be rotationally molded, seamless construction with flanged top and welded or bolt down cover, as supplied by IPEX. Tank shall be Neutratank No. CT0100, having 100-gallon capacity complete with 3" inlet and outlet, and 1-1/2" vent connection. Tank to be 32" diameter x 42" high. Tank shall be installed in accordance with manufacturer's recommendations.

Contractor shall furnish and fill the tank prior to installation with limestone chips, as supplied by IPEX, to a level just below the tank outlet. Water should be added to the tank prior to placement of the limestone chips.

Monitoring Systems

Acid waste monitoring system shall be the Neutrasystem 2 pH Monitoring System as supplied by IPEX Industrial Systems, comprising of a UL 508-listed, NEMA 4X, electrical pH monitoring panel and a 5-gallon high density polyethylene, one piece construction, rotationally molded sampling tank. The control panel shall incorporate a sonalert soft internal alarm horn with silencing switch, pH HIGH and LOW LED red light alarms, and power ON white LED pilot light. The controller shall link, via preamplifier, to a Series 6510 submersible pH electrode encapsulated in a chemically resistant CPVC body with viton O-rings. The electrode shall have a flat sensing surface and the electrode body shall incorporate a twist lock connection to facilitate easy removal and replacement. The electrode shall have a response time of 5-10 seconds for pH changes. The 5 gallon pH sampling tank shall be installed downstream of a rotationally molded construction, high density polyethylene Neutratank with a flanged top, and combination bolt down and access cover. Connecting piping for the acid waste drainage and vent system shall be NSF-listed Schedule 40 polypropylene conforming to ASTM F1412 as manufactured by IPEX. Connecting fittings shall be NSF-listed, incorporating molded-in-place nickel chrome wire and joined using the Enfield Hand Held Control Unit, or all plastic construction mechanical joint fittings incorporating anti pull-out collars (olives) to ensure against accidental pipe-fitting separation during and after installation. Installation and testing of the Neutrasystem 2 shall be in accordance with the contract drawings, the manufacturer's recommendations and the local plumbing codes.

ENCASE™ DOUBLE CONTAINMENT ACID WASTE SYSTEMS

Encase Long Form

General

Acid waste double containment drain lines, as shown on drawings, shall be Encase, manufactured by IPEX, with no substitutions. Pipe and fittings shall be manufactured from Schedule 40 polypropylene and joined by the Enfusion method.

Material

Pipe, fittings, internal pipe supports and anchor plates shall be manufactured from Type 110 or 210 polypropylene material as described in ASTM D 4101.

Pipe and Fittings – Construction

All pipe fittings shall be factory assembled and of unitized construction, with the primary and secondary components integrally anchored together to prevent movement of the primary pipe/fitting within the containment pipe/fitting. All piping components shall be manufactured to Schedule 40 dimensions. The primary pipe shall be adequately supported by means of support plates welded to the primary pipe. Anchor plates shall be provided at each end of the pipe/fitting section to restrain pipe expansion. All anchor plates must be mechanically located in a machined recess on the inside of each secondary pipe/fitting and welded to both the primary and secondary pipe/fitting sections.

Factory Welded Joints

All factory joints shall be made either by butt fusion or Enfusion. Joining by means of fillet welding is expressly forbidden.

Site Joints

All site joints shall be made using Enfusion couplings, manufactured from polypropylene with a nickel/chrome resistance wire, molded in place. Components with copper wire elements are prohibited. Solvent, butt-welded or fillet-welded site joints are also prohibited.

Installation

Installation shall be in accordance with the contract drawings, the manufacturer's recommendations and the local plumbing code. The entire installation shall be installed in proper alignment and free of stress.

Testing

The system shall be tested in accordance with the manufacturer's recommendations and the local plumbing code. The primary pipe shall be tested prior to making the secondary joints.

If Secondary pipe cannot be hydro-tested, as determined by the engineer or authority having jurisdiction, then the use of nitrogen or air at a MAXIMUM 5 psi (gauge) shall be allowed. It is imperative that a working-pressure regulator be used during the pneumatic test to ensure that over-pressurization beyond 5 psi, cannot occur. The following must also be noted: Air or nitrogen under pressure is compressed and therefore poses a potential hazard. If a failure of the pipe or fitting occurs during such test, the air exits at the failure point and expands rapidly. This increase in velocity can cause the system to fail in a catastrophic mode. Therefore during such air test all personnel involved in the test or present in the test surrounding area must be aware of such a possibility and take all necessary precautions. Precautions include, but are not limited to, taking extreme care not to impact or damage the system in any way.

Such procedure is a limited exception to IPEX standard policy which forbids the use of its rigid systems with any compressed gases.

Encase Short Form

Acid waste double containment drain lines shall be Encase, as manufactured by IPEX, with no substitutions. Pipe and fittings shall be manufactured from Schedule 40, ASTM D 4101 Type 110 or 210 polypropylene. Joining shall be made using Enfusion couplings and a nickel/chrome wire molded in place. All pipe fittings shall be factory assembled, with Enfusion, or butt fusion welds, and be of unitized construction, with primary and secondary components integrally anchored together to control expansion and contraction. All primary joints shall be pressure tested and inspected, in accordance with the manufacturer's instructions and any local plumbing codes, prior to making any secondary joints.

NOTES

CONVERSION CHARTS

Contents of Pipe — Capacity per Foot of Pipe Length

Diameter (inches)	Diameter (feet)	For One Foot Length	
		ft3	U.S. Gal
1-1/2	.1250	.0123	.0918
2	.1667	.021	.1632
3	.2500	.0491	.3673
4	.3333	.0873	.6528
6	.5000	.1963	4.469
8	.6667	.3490	2.611
10	.8333	.5455	4.081
12	1.000	.7854	5.876

Volume

Volume of a pipe is computed by: $V = 1/4\ ID^2 \times \pi \times L \times 12$

Where: V = volume (in cubic inches)
ID = inside diameter (in inches)
π = 3.14159
L = length of pipe (in feet)

Pressure

1 psi = 2.31 ft of H_2O
1 ft of H_2O = 0.43 psi

Decimal and Millimeter Equivalents of Fractions

Fractions	Decimals	Millimeters	Fractions	Decimals	Millimeters
1/64	0.015625	0.397	33/64	0.515625	13.097
1/32	0.03125	0.794	17/32	0.53125	13.494
3/64	0.046875	1.191	35/64	0.546875	13.891
1/16	0.0625	1.588	9/16	0.5625	14.288
5/64	0.078125	1.984	37/64	0.578125	14.684
3/32	0.09375	2.381	19/32	0.59375	15.081
7/64	0.109375	2.778	39/64	0.609375	15.478
1/8	0.125	3.175	5/8	0.625	15.875
9/64	0.140625	3.572	41/64	0.640625	16.272
5/32	0.15625	3.969	21/32	0.65625	16.669
11/64	0.171875	4.366	43/64	0.671875	17.066
3/16	0.1875	4.763	11/16	0.6875	17.463
13/64	0.203125	5.159	45/64	0.703125	17.859
7/32	0.21875	5.556	23/32	0.71875	18.256
15/64	0.23475	5.953	47/64	0.734375	18.653
1/4	0.250	6.350	3/4	0.750	19.050
17/64	0.265625	6.747	49/64	0.765625	19.447
9/32	0.28125	7.144	25/32	0.78125	19.844
19/64	0.296875	7.541	51/64	0.796875	20.241
5/16	0.3125	7.938	13/16	0.8125	20.638
21/64	0.328125	8.334	53/64	0.828125	21.034
11/32	0.34375	8.731	27/32	0.83475	21.431
23/64	0.359375	9.128	55/64	0.859375	21.828
3/8	0.375	9.525	7/8	0.875	22.225
25/64	0.390625	9.922	57/64	0.890625	22.622
13/32	0.40625	10.319	29/32	0.90625	23.019
27/64	0.421875	10.716	59/64	0.921875	23.416
7/16	0.4375	11.113	15/16	0.9375	23.813
29/64	0.453125	11.509	61/64	0.953125	24.209
15/32	0.46875	11.906	31/32	0.96875	24.606
31/64	0.484375	12.303	63/64	0.984375	25.003
1/2	0.500	12.700	1	1.000	25.400

CONVERSION CHARTS

Temperature Conversion

°F	°C	°F	°C	°F	°C	°F	°C	°F	°C	°F	°C
-459.4	-273	1	-17.2	49	9.4	97	36.1	540	282	1040	560
-450	-268	2	-16.7	50	10.0	98	36.7	550	288	1060	571
-440	-262	3	-16.1	51	10.6	99	37.2	560	293	1080	582
-430	-257	4	-15.6	52	11.1	100	37.8	570	299	1100	593
-420	-251	5	-15.0	53	11.7	110	43	580	304	1120	604
-410	-246	6	-14.4	54	12.2	120	49	590	310	1140	616
-400	-240	7	-13.9	55	12.8	130	54	600	316	1160	627
-390	-234	8	-13.3	56	13.3	140	60	610	321	1180	638
-380	-229	9	-12.8	57	13.9	150	66	620	327	1200	649
-370	-223	10	-12.2	58	14.4	160	71	630	332	1220	660
-360	-218	11	-11.7	59	15.0	170	77	640	338	1240	671
-350	-212	12	-11.1	60	15.6	180	82	650	343	1260	682
-340	-207	13	-10.6	61	16.1	190	88	660	349	1280	693
-330	-201	14	-10.0	62	16.7	200	92	670	354	1300	704
-320	-196	15	-9.4	63	17.2	210	99	680	360	1350	732
-310	-190	16	-8.9	64	17.8	212	100	690	366	1400	760
-300	-184	17	-8.3	65	18.3	220	104	700	371	1450	788
-290	-179	18	-7.8	66	18.9	230	110	710	377	1500	816
-280	-173	19	-7.2	67	19.4	240	116	720	382	1550	843
-273	-169	20	-6.7	68	20.0	250	121	730	388	1600	871
-270	-168	21	-6.1	69	20.6	260	127	740	393	1650	899
-260	-162	22	-5.6	70	21.1	270	132	750	399	1700	927
-250	-157	23	-5.0	71	21.7	280	138	760	404	1750	954
-240	-151	24	-4.4	72	22.2	290	143	770	410	1800	982
-230	-146	25	-3.9	73	22.8	300	149	780	416	1850	1010
-220	-140	26	-3.3	74	23.3	310	154	790	421	1900	1038
-210	-134	27	-2.8	75	23.9	320	160	800	427	1950	1066
-200	-129	28	-2.2	76	24.4	330	166	810	432	2000	1093
-190	-123	29	-1.7	77	25.0	340	171	820	438	2050	1121
-180	-118	30	-1.1	78	25.6	350	177	830	443	2100	1149
-170	-112	31	-0.6	79	26.1	360	182	840	449	2150	1177
-160	-107	32	0.0	80	26.7	370	188	850	454	2200	1204
-150	-101	33	0.6	81	27.2	380	193	860	460	2250	1232
-140	-96	34	1.1	82	27.8	390	199	870	466	2300	1260
-130	-90	35	1.7	83	28.3	400	204	880	471	2350	1288
-120	-84	36	2.2	84	28.9	410	210	890	477	2400	1316
-110	-79	37	2.8	85	29.4	420	215	900	482	2450	1343
-100	-73	38	3.3	86	30.0	430	221	910	488	2500	1371
-90	-68	39	3.9	87	30.6	440	227	920	493	2550	1399
-80	-62	40	4.4	88	31.1	450	232	930	499	2600	1427
-70	-57	41	5.0	89	31.7	460	238	940	504	2650	1454
-60	-51	42	5.6	90	32.2	470	243	950	510	2700	1482
-50	-46	43	6.1	91	32.8	480	249	960	516	2750	1510
-40	-40	44	6.7	92	33.3	490	254	970	521	2800	1538
-30	-34	45	7.2	93	33.9	500	260	980	527	2850	1566
-20	-29	46	7.8	94	34.4	510	266	990	532	2900	1593
-10	-23	47	8.3	95	35.0	520	271	1000	538	2950	1621
0	-17.8	48	8.9	96	35.6	530	277	1020	549	3000	1649

The following formulas may also be used for converting Celsius or Fahrenheit degrees into the other scales.

Degrees Celsius $°C = \frac{5}{9}(°F - 32)$ Degrees Fahr. $°F = \frac{9}{5}°C + 32$

Degrees Kelvin $°T = °C + 273.2$ Degrees Rankine $°R = °F + 459.7$

NOTES

NOTES

SALES AND CUSTOMER SERVICE

IPEX Inc.
Toll Free: (866) 473-9462
ipexna.com

About IPEX by Aliaxis

As leading suppliers of thermoplastic piping systems, IPEX by Aliaxis provides our customers with some of the largest and most comprehensive product lines. All IPEX by Aliaxis products are backed by more than 50 years of experience. With state-of-the-art manufacturing facilities and distribution centers across North America, we have established a reputation for product innovation, quality, end-user focus and performance.

Markets served by IPEX by Aliaxis include:

- Electrical
- Telecommunications and utility
- Industrial process piping
- Municipal pressure and gravity flow
- Plumbing, DWV and water supply
- Irrigation
- Electrofusion PE for gas and water
- Industrial, plumbing and electrical cements
- PVC, CPVC, ABS, PE, PEX, PVCO, PP and PVDF pipe and fittings (1/2" to 60")

Elastolives™, Encase™, Enfield™, Floway™, Labline®, Neutrasystem2™, Neutratank® and Plenumline™ are trademarks of IPEX Branding Inc.

This literature is published in good faith and is believed to be reliable. However it does not represent and/or warrant in any manner the information and suggestions contained in this brochure. Data presented is the result of laboratory tests and field experience.

A policy of ongoing product improvement is maintained. This may result in modifications of features and/or specifications without notice.

IPEX by aliaxis

MNINAWIP210305R3C
© 2023 IPEX IND003C