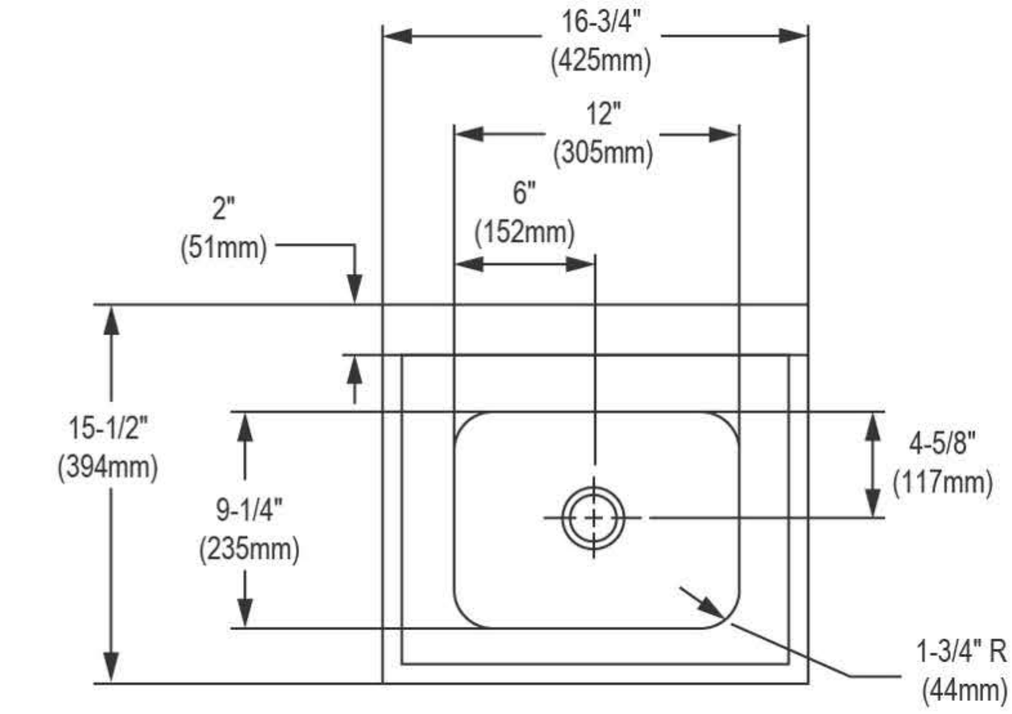

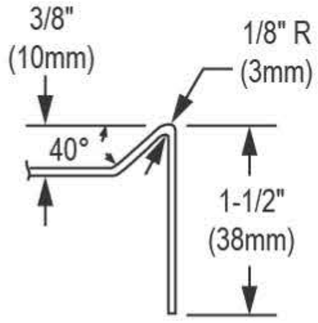
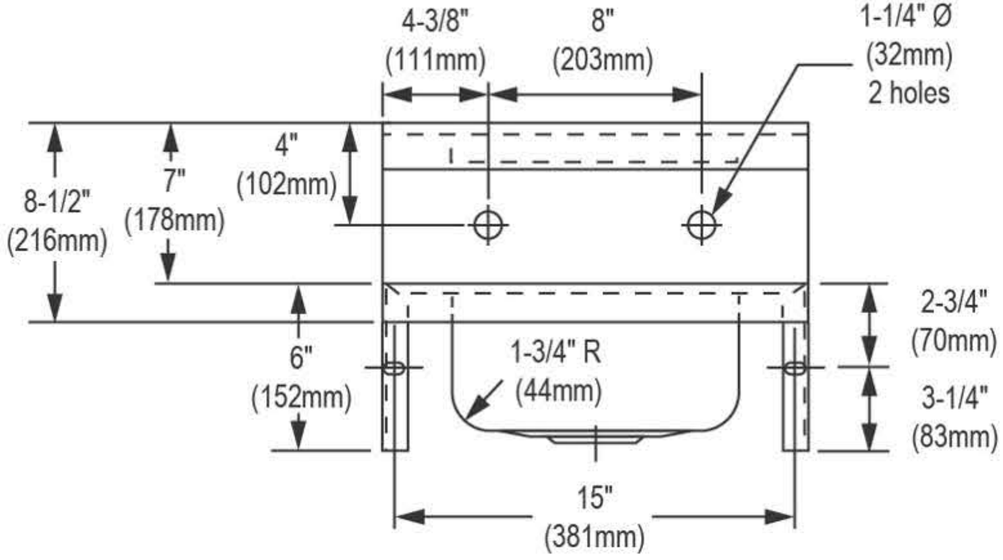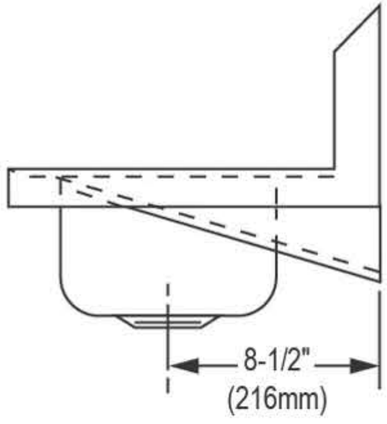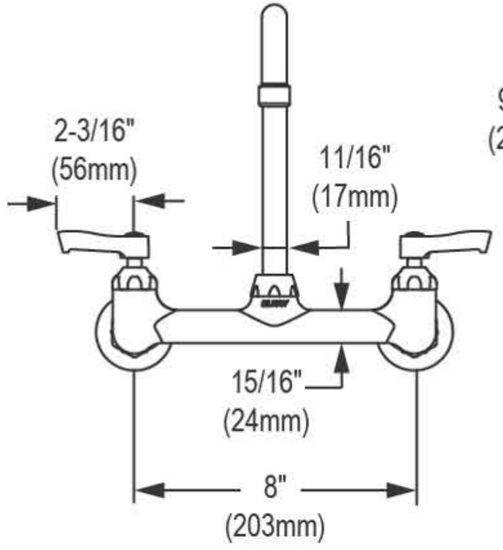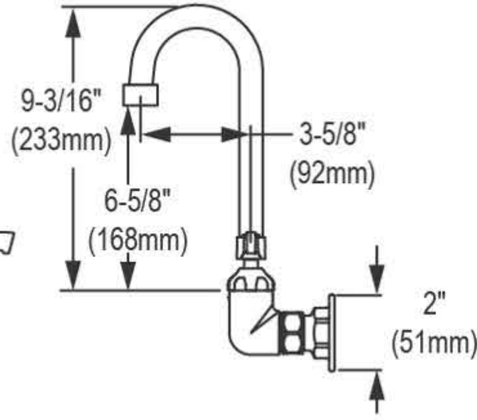
SECTION THROUGH RIM