"CATALOG NO. (XXX INDICATES LENGTH)"	FIGURE NO.	WIRE NO.	WIRE COLOR	NUMBER OF POLES	AMPS
RM2306PBXXX	1.0000	1.0000	BLACK	6.0000	20
		2.0000	WHITE		
		3.0000	GREEN/YELLOW		
		4.0000	BLACK		
		5.0000	BLACK		
		6.0000	GREEN/YELLOW		
RM2304PBXXX	2.0000	1.0000	BLACK	4.0000	20.0000
		2.0000	WHITE		
		3.0000	GREEN/YELLOW		
		6.0000	GREEN/YELLOW		
RM2303PBXXX	3.0000	1.0000	BLACK	3.0000	20.0000
		2.0000	WHITE		
		3.0000	GREEN/YELLOW		
RM2304PAXXX	2.0000	1.0000	BLACK	4.0000	20.0000
		2.0000	BLACK		
		3.0000	GREEN/YELLOW		
		6.0000	GREEN/YELLOW		

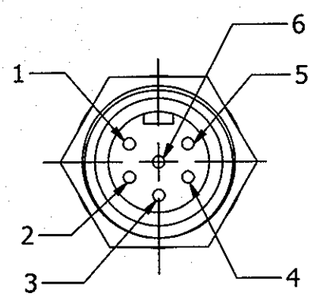

FIGURE 1

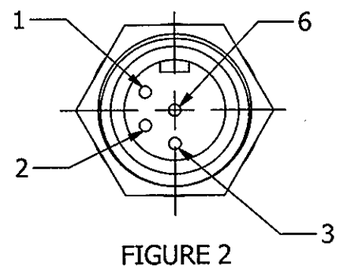

FIGURE 2

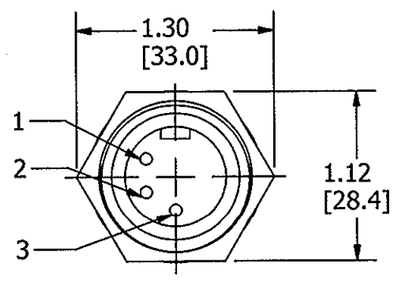

FIGURE 3

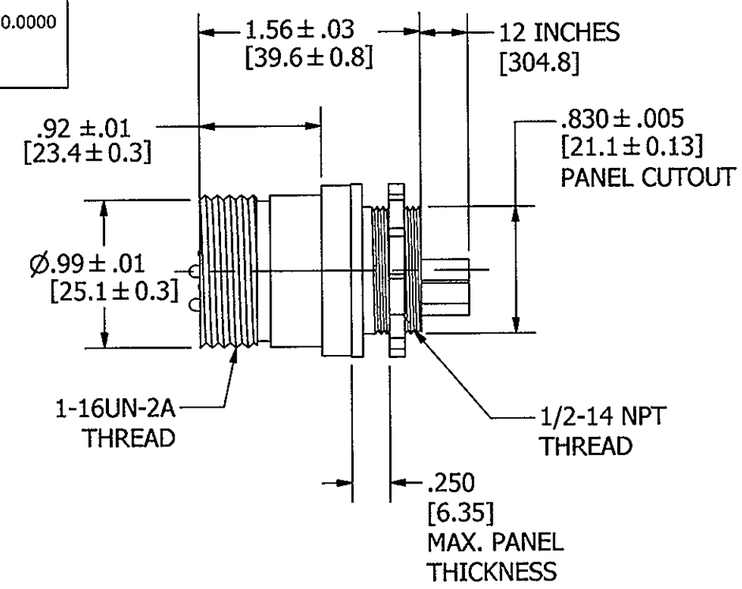

NOTES: UNLESS OTHERWISE SPECIFIED:

1. UL LISTED (PRODUCT CATEGORY CYJV). NOT FOR CURRENT INTERRUPT, RATING 20A/600V
   WIRE - LISTED TYPE MTW
2. DIMENSIONS ARE IN INCHES [mm].
3. THESE DEVICES SHALL CONFORM TO LINKOSITY SPECIFICATIONS -0015, -0177
4. LINKOSITY™ IS A TRADEMARK OF LOCKHEED MARTIN.

LIST OF PARTS

DESCRIPTION	MATERIAL	FINISH
RECEPTACLE SHELL	BRASS	NICKEL PLATED
INSULATOR	NYLON	WHITE
LOCKNUT	STEEL	ZINC PLATED
GASKET	RUBBER	YELLOW
SOCKET CONTACT	COPPER ALLOY	GOLD OVER Pd/Ni
WIRE 10 & 12 AWG	COPPER	STRANDS
POTTING COMPOUND		BLACK

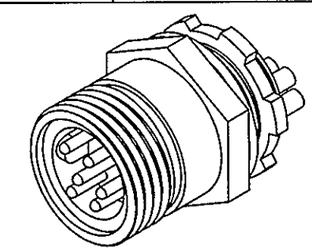

CATALOG NO. RM2304PBXXX
(NOT SHOWN TO SCALE)

REV	DESCRIPTION	APP	DATE
9	REVISED DRAWING PER DCN 22024	DJP	5/19/16
8	REDRAWN WITH EMBEDDED CAD MODEL WITH NO CHANGES TO PART GEOMETRY. PER DCN 21895 SPN	DJP	2/16/16

THE DESIGN AND DIMENSIONS OF THE PRODUCT SHOWN ON THIS DRAWING ARE SUBJECT TO CHANGE WITHOUT NOTICE

TITLE
MALE RECEPTACLE, LINKOSITY™ HEX MOUNT, 600V

TOLERANCES UNLESS OTHERWISE SPECIFIED
.XX = ± .01
.XXX = ± .005
ANGLES = ± 2°

WIRING DEVICE-KELLEMS
HUBBELL INCORPORATED
SHELTON, CT

DR. BY	MJM	APP. BY	RDK
TR. BY		SCALE	1:1
CHK. BY	RDK	DATE	12/11/03

DIMENSION SHEET FOR CAT. NO. SEE TABLE

REPAIRABLE ☐ NON-REPAIRABLE ☐

B

M-9238

9

CODE 74545