M-8300 | 1

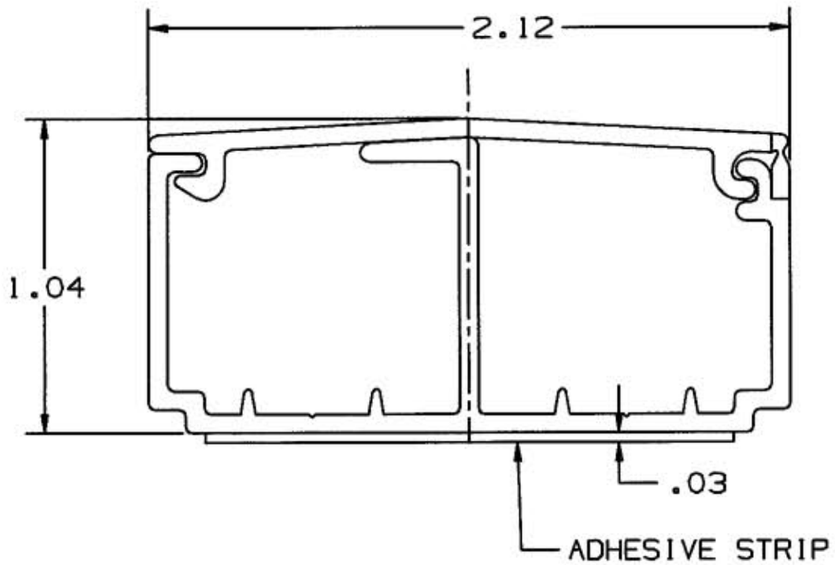

RACEWAY - 5 FT = PW2BC5
RACEWAY - 7 FT = PW2BC7
RACEWAY, WITH ADHESIVE, 5 FT = PW2ABC5
RACEWAY, WITH ADHESIVE, 7 FT = PW2ABC7

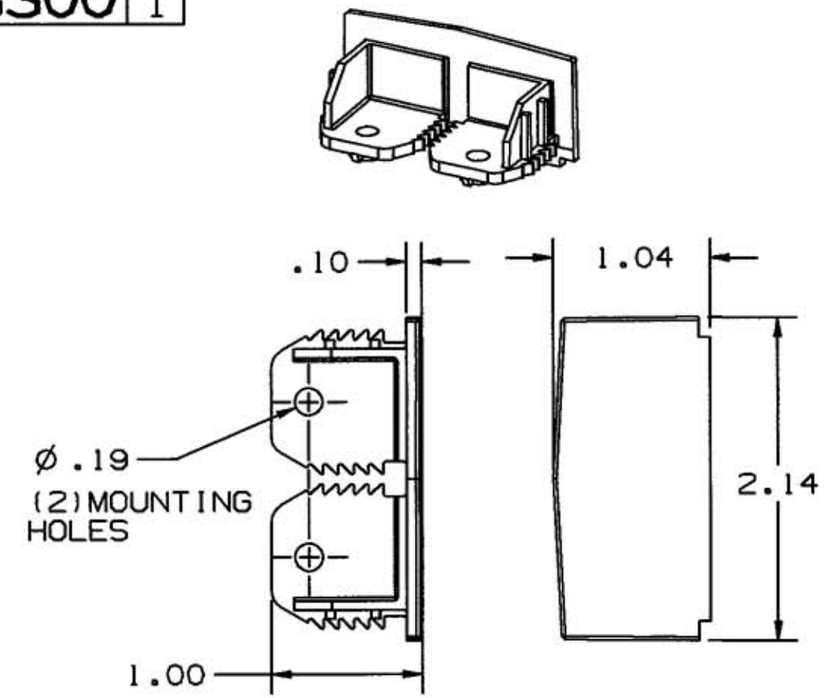

END CAP PW2EC

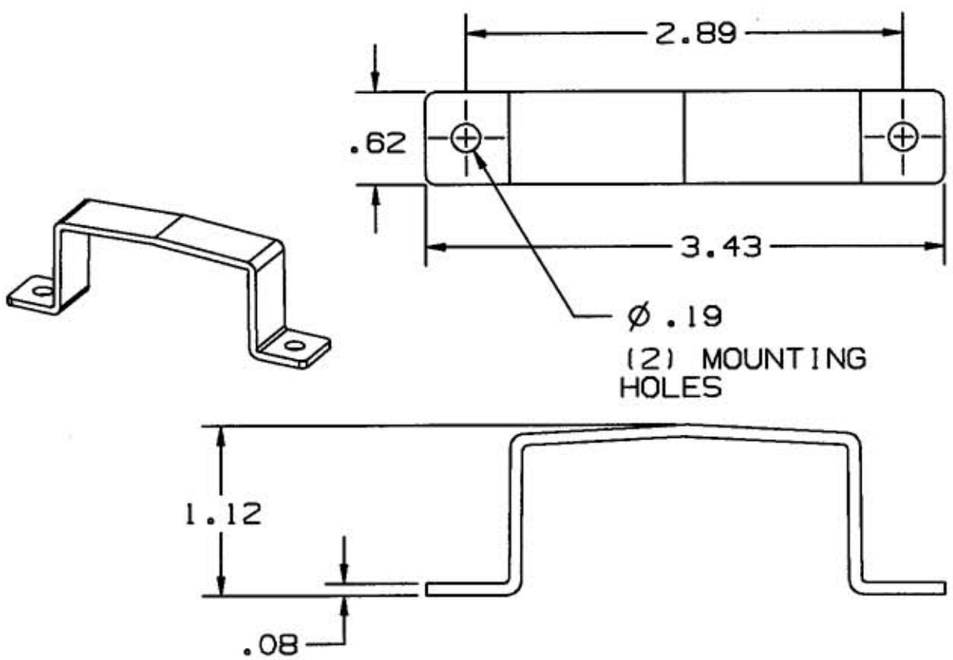

SECURITY STRAP/SPLICE COVER PW2SS

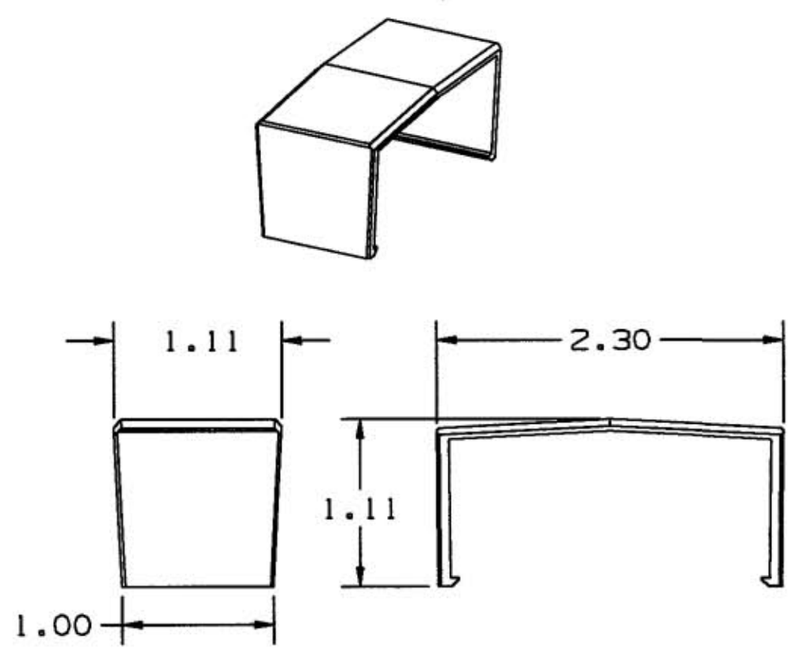

SPLICE COVER PW2SC

LIST OF PARTS

DESCRIPTION	MATERIAL	FINISH
RACEWAY	PVC	OFFICE WHITE
END CAP	PVC	OFFICE WHITE
SPLICE COVER	PVC	OFFICE WHITE
SECURITY STRAP/SPLICE COVER	PVC	OFFICE WHITE

SYM	REVISIONS	APP	DATE
1	RELEASED PER DCN 8068	SRE	10/13/00

THE DESIGN AND DIMENSIONS OF THE PRODUCT SHOWN ON THIS DRAWING ARE SUBJECT TO CHANGE WITHOUT NOTICE

TITLE RACEWAY & FITTINGS, PW2 WALLTRAK

TOLERANCES UNLESS OTHERWISE SPECIFIED
FRACTIONS ±1/64
DECIMALS ±.005
ANGLES ±2°

WIRING DEVICE-KELLEMS
HUBBELL INCORPORATED
BRIDGEPORT, CT

DR. BY SRE	APP. BY SRE
TR. BY	SCALE ---
CHK'D BY SRE	DATE 4/20/00

DIMENSION SHEET FOR CAT. NO.

REPAIRABLE ☐ NON-REPAIRABLE ☒

B

M-8300

1

CODE 74545