M-10111 1

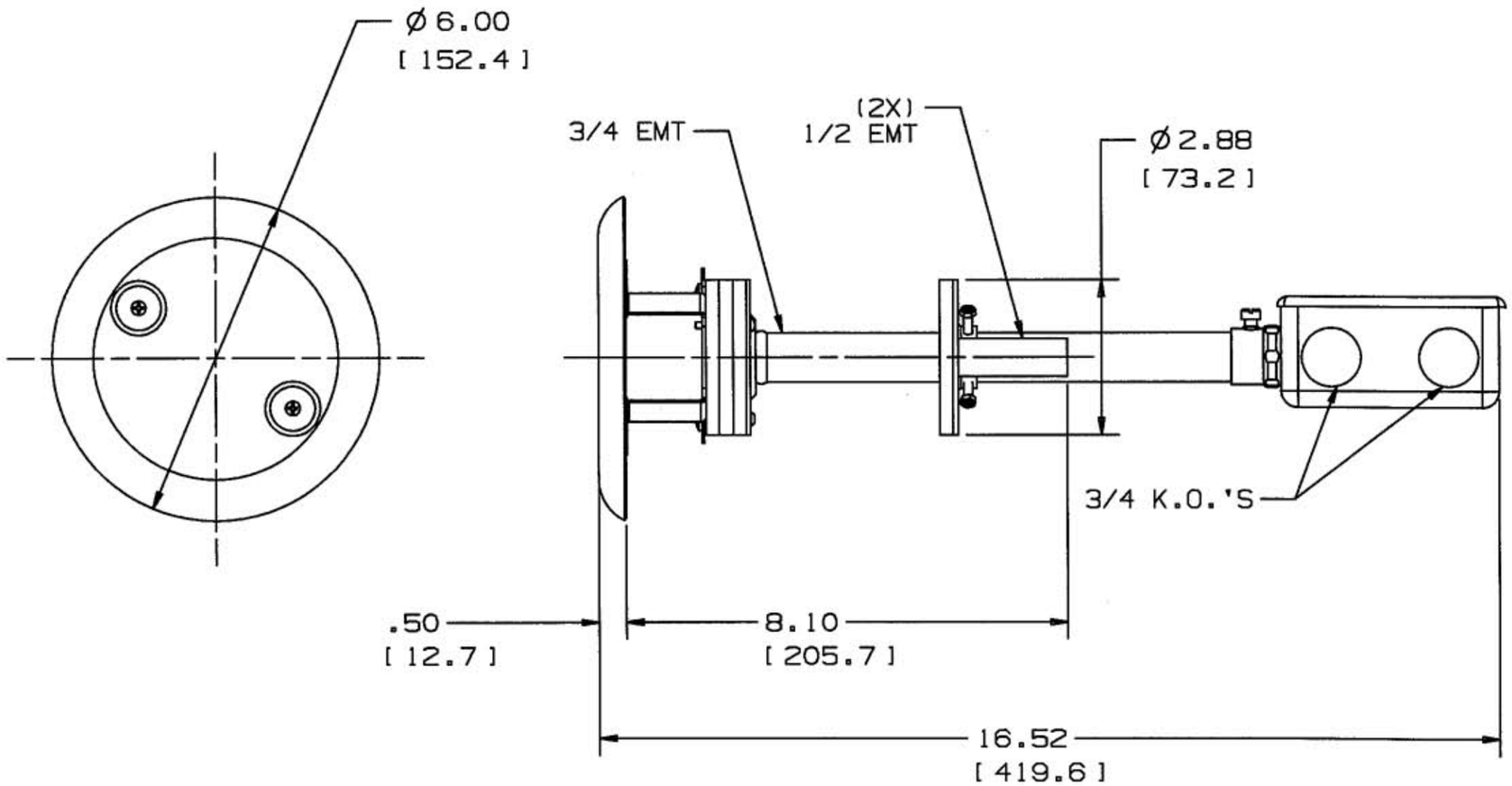

NOTE:
1. DIMENSIONS ARE IN INCHES [MM].
2. PRODUCT MUST MEET UL & CSA CONSTRUCTION, PERFORMANCE & MARKING REQUIREMENTS.
3. .XX TOLERANCE TO BE ±.03

LIST OF PARTS

DESCRIPTION	MATERIAL	FINISH
PLATE	ALUM.	
FLOOR CUP	STEEL	GALV.
INSULATOR	THERMOSET	BLACK
CLIP, POSITION	ST. STEEL	
JUNCTION BOX	STEEL	GALV.
COLLAR	STEEL	ZINC PLATE
BOX COVER	STEEL	GRAY
FIRE BARRIERS	FIRE BARRIER MAT'L	VINYL COATED

SYM	REVISIONS	APP	DATE
1	RELEASED PER DCN#13080		5/15/06

THE DESIGN AND DIMENSIONS OF THE PRODUCT SHOWN ON THIS DRAWING ARE SUBJECT TO CHANGE WITHOUT NOTICE

TITLE
THRU FLOOR FITTING
2 X 2 FRPT

TOLERANCES UNLESS OTHERWISE SPECIFIED
FRACTIONS ±1/64
~~DECIMALS ±.005~~
ANGLES ±2°

WIRING DEVICE-KELLEMS
HUBBELL INCORPORATED
BRIDGEPORT, CT

DR. BY ABS	APP. BY
TR. BY	SCALE HALF
CHK'D BY	DATE 5/15/06

DIMENSION SHEET FOR CAT. NO.
PT2X2FIT
REPAIRABLE ☒ NON-REPAIRABLE ☐
B
M-10111
1

CODE 74545