M-12016 | 1

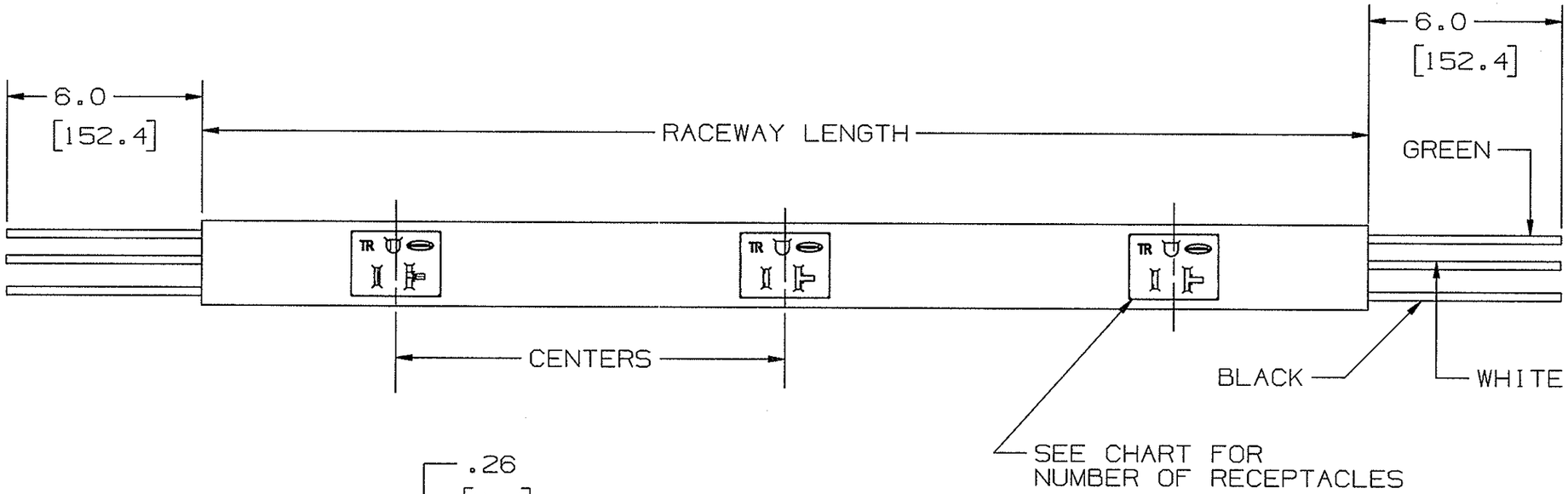

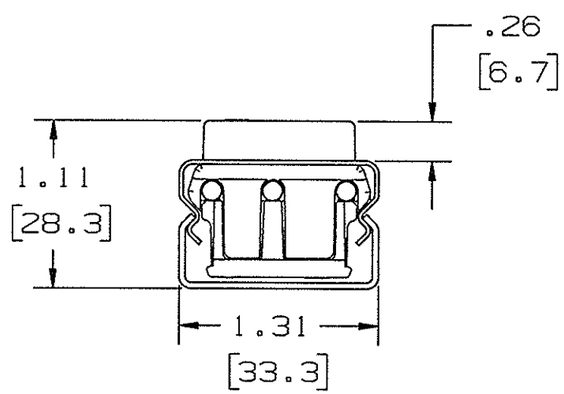

END VIEW

NOTES:
1) RECEPTACLES ARE LOCATED SYMMETRICALLY IN OVERALL LENGTH.
2) CONDUCTORS - #12 THHN STRANDED WIRE.
3) "IV" IN CATALOG NUMBER DENOTES IVORY, "GY" IN CATALOG NUMBER DENOTES GRAY.

ALL DIMENSIONS ARE IN INCHES AND [MILLIMETERS]

CATALOG NUMBER	CONFIGURATION	RACEWAY LENGTH	NO. OF CIRCUITS	CENTERS	NO. OF RECEPTACLES
HBL20GB306IVTR	15AMP PER NEMA 5-15R	3 FT [91 CM]	1	6.0 [152]	6
HBL20GB306GYTR	15AMP PER NEMA 5-15R	3 FT [91 CM]	1	6.0 [152]	6
HBL20GB512IVTR	15AMP PER NEMA 5-15R	5 FT [152 CM]	1	12.0 [305]	5
HBL20GB512GYTR	15AMP PER NEMA 5-15R	5 FT [152 CM]	1	12.0 [305]	5
HBL24GB306IVTR	20AMP PER NEMA 5-20R	3 FT [91 CM]	1	6.0 [152]	6
HBL24GB306GYTR	20AMP PER NEMA 5-20R	3 FT [91 CM]	1	6.0 [152]	6
HBL24GB512IVTR	20AMP PER NEMA 5-20R	5 FT [152 CM]	1	12.0 [305]	5
HBL24GB512GYTR	20AMP PER NEMA 5-20R	5 FT [152 CM]	1	12.0 [305]	5

CODE 74545

LIST OF PARTS

DESCRIPTION	MATERIAL	FINISH
RACEWAY	STEEL	SEE NOTES
RECEPTACLES	PVC	SEE NOTES
CONTACTS	COPPER ALLOY	NONE

DIMENSION SHEET FOR CAT. NO. SEE TABLE

REPAIRABLE ☐ NON-REPAIRABLE ☒

SYM	REVISIONS	APP	DATE
1	RELEASED PER DCN18223		8/2/11

THE DESIGN AND DIMENSIONS OF THE PRODUCT SHOWN ON THIS DRAWING ARE SUBJECT TO CHANGE WITHOUT NOTICE

TITLE
PLUGTRAK - TAMPER RESISTANT STEEL RACEWAY, MULTI-OUTLET ASSEMBLIES

TOLERANCES UNLESS OTHERWISE SPECIFIED
FRACTIONS ±1/64
DECIMALS ±.005
ANGLES ±2°

WIRING DEVICE-KELLEMS
HUBBELL INCORPORATED
BRIDGEPORT, CT

DR. BY SRE | APP. BY
TR. BY | SCALE NONE
CHK'D BY | DATE 8/1/11

B

M-12016

1