M-10195 | 2

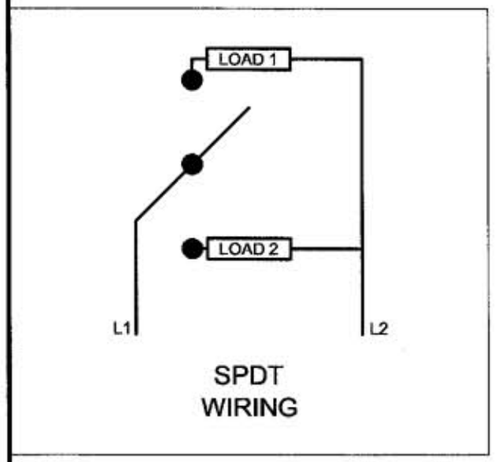

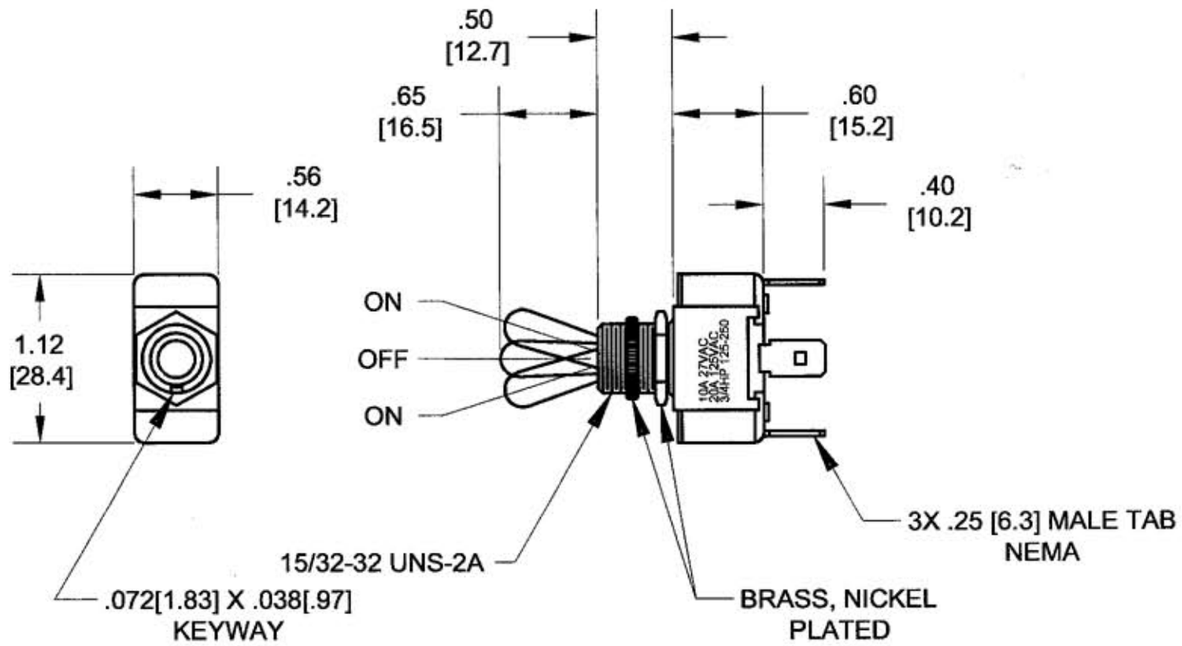

NOTES: (UNLESS OTHERWISE SPECIFIED):

1) DIMENSIONS ARE: INCHES
[MM]

2) SUPPLIED ASSEMBLED WITH: KNURL NUT AND HEX NUT.

3) RECOMMENDED PANEL MOUNT OPENING 0.50 [12.7].

4) RATING: 10 AMP, 277VAC
20 AMP, 125VAC
3/4 HP, 125-250

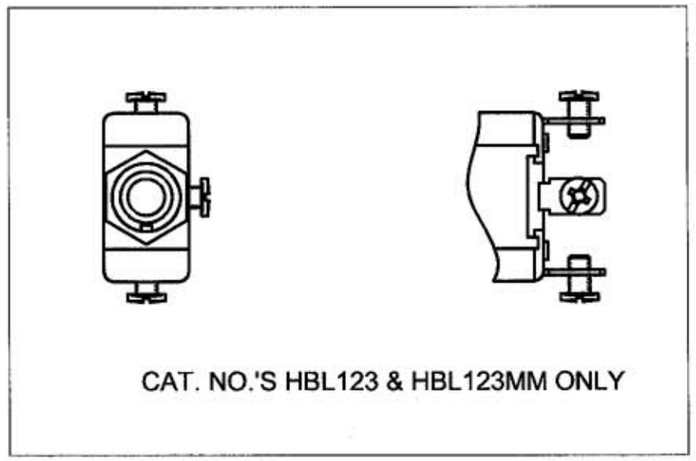

CATALOG NO.	TERMINAL TYPE	SWITCH DESCRIPTION
HBL123SPMM	SPADE, .250 MALE TAB NEMA	SINGLE POLE, DOUBLE THROW, MOMENTARY ON
HBL123	SCREW, #6-32UNS-2B	SINGLE POLE, DOUBLE THROW
HBL123SP	SPADE, .250 MALE TAB NEMA	SINGLE POLE, DOUBLE THROW
HBL123MM	SCREW, #6-32UNS-2B	SINGLE POLE, DOUBLE THROW, MOMENTARY ON

LIST OF PARTS

DESCRIPTION	MATERIAL	FINISH

DIMENSION SHEET FOR CAT. NO. SEE TABLE

REPAIRABLE ☐ NON-REPAIRABLE ☒

SYM	REVISIONS	APP	DATE
2	REMOVED "BRASS, BLACK OXIDE" CALLOUT; ADDED LEADER TO "BRASS, NICKEL PLATED" CALL-OUT PER DCN #13568 RCM	JPP	11/30/06
1	RELEASED FOR PRODUCTION PER DCN # 13193. JMN	JPP	8/2/06

THE DESIGN AND DIMENSIONS OF THE PRODUCT SHOWN ON THIS DRAWING ARE SUBJECT TO CHANGE WITHOUT NOTICE

TITLE
TOGGLE SWITCH
SINGLE POLE, DOUBLE THROW

TOLERANCES UNLESS OTHERWISE SPECIFIED
FRACTIONS ±1/64
DECIMALS ±.005
ANGLES ±2°

WIRING DEVICE-KELLEMS
HUBBELL INCORPORATED
BRIDGEPORT, CT

DR. BY JMN	APP. BY JPP
TR. BY	SCALE NONE
CHK'D BY JPP	DATE 8/2/06

M-10195 B 2

CODE 74545