M-7402 | 4

20A & 16A	30A & 32A
C320P4W	C330P6W
C320P6W	C330P7W
C420P5W	C430P5W
C420P7W	C430P7W
C420P9W	C430P9W
C420P12W	C430P12W
	C530P7&9W
	C530P9W
C316P4W	C332P4W
C316P6W	C332P6W
C416P6W	C432P3W
C516P6W	C432P6W
	C532P6W
CATALOGS PLUG WATERTIGHT	
60A & 63A	100A & 125A
C460P5W	C4100P5W
C460P7W	C4100P7W
C460P9W	C4100P9W
C560P9W	C4100P12W
	C5100P9W
C360P6W	
C363P6W	C4125P6W
C463P6W	C5125P6W
C563P6W	

	20 & 16 AMPERE						30 & 32 AMPERE					
	3 WIRE		4 WIRE		5 WIRE		3 WIRE		4 WIRE		5 WIRE	
KEY	MM	INCHES	MM	INCHES	MM	INCHES	MM	INCHES	MM	INCHES	MM	INCHES
a Ø	70.5	2.75	78	3.04	96.5	3.37	94	3.67	94	3.67	101.5	3.96
b	112	4.37	112	4.37	118	4.60	144	5.62	144	5.62	144	5.62
c	139	5.42	139	5.42	145	5.66	171	6.67	171	6.67	171	6.67
d	105.5	4.11	105.5	4.11	11.5	4.35	127	4.95	127	4.65	127	4.95
e Ø	16	.62	16	.62	16	.62	22.5	.88	22.5	.88	22.5	.88

	60 & 63 AMPERE						100 & 125 AMPERE					
	3 WIRE		4 WIRE		5 WIRE		3 WIRE		4 WIRE		5 WIRE	
KEY	MM	INCHES	MM	INCHES	MM	INCHES	MM	INCHES	MM	INCHES	MM	INCHES
a Ø	113.5	4.43	113.5	4.43	113.5	4.43	125	4.88	125	4.88	125	4.88
b	226	83.81	226	83.81	226	83.81	253	9.87	253	9.87	253	9.87
c	254	9.91	254	9.91	254	9.91	286	11.15	286	11.15	286	11.15
d	192	7.49	192	7.49	192	7.49	215	8.39	215	8.39	215	8.39
e Ø	36.5	1.43	36.5	1.43	36.5	1.43	44	1.72	44	1.72	44	1.72

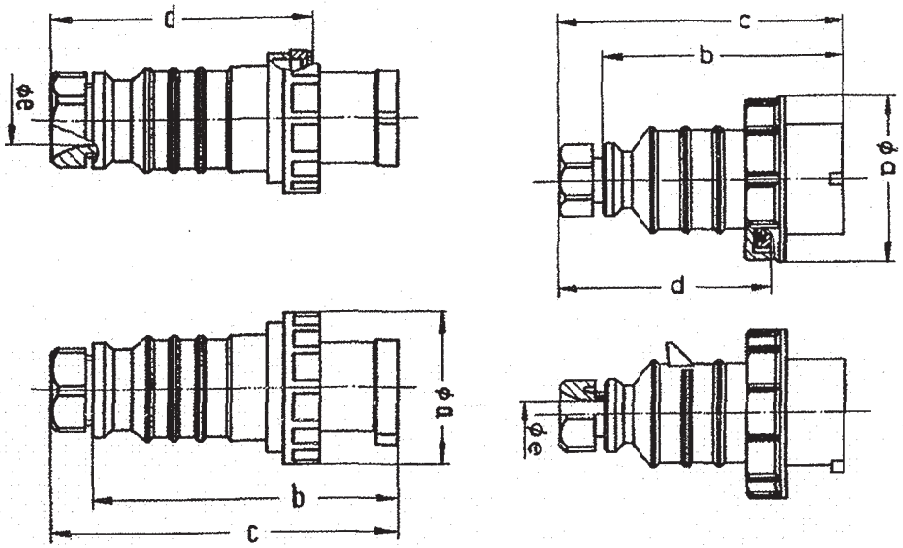

DIMENSIONS ARE IN INCHES/mm

CODE 74545

LIST OF PARTS

DESCRIPTION	MATERIAL	FINISH

DIMENSION SHEET FOR CAT. NO. SEE TABLE

REPAIRABLE ☐ NON-REPAIRABLE ☐

SYM	REVISIONS	APP	DATE
4	REVISED BORDER; ADDED C520P9W TO TABLE PER DCN 17823 RCM	DJP	7/13/11
3	ADDED C360P6W ZONE A4 PER DCN 11919 TJV	JVD	8/12/04
2	ADD 16,32,63 & 125A CATS PER DCN 7437 GPK	CP	3/28/96

B

THE DESIGN AND DIMENSIONS OF THE PRODUCT SHOWN ON THIS DRAWING ARE SUBJECT TO CHANGE WITHOUT NOTICE

TITLE PIN & SLEEVE WATERTIGHT PLUG

M-7402

TOLERANCES UNLESS OTHERWISE SPECIFIED
FRACTIONS ±1/64
DECIMALS ±.005
ANGLES ±2°

WIRING DEVICE-KELLEMS
HUBBELL INCORPORATED
BRIDGEPORT, CT

DR. BY G.K	APP. BY JVD
TR. BY	SCALE NONE
CHK'D BY CHIP P	DATE 3/12/96

4