PART#: WA72XM3918U
(DATA SUBJECT TO CHANGE WITHOUT NOTICE)
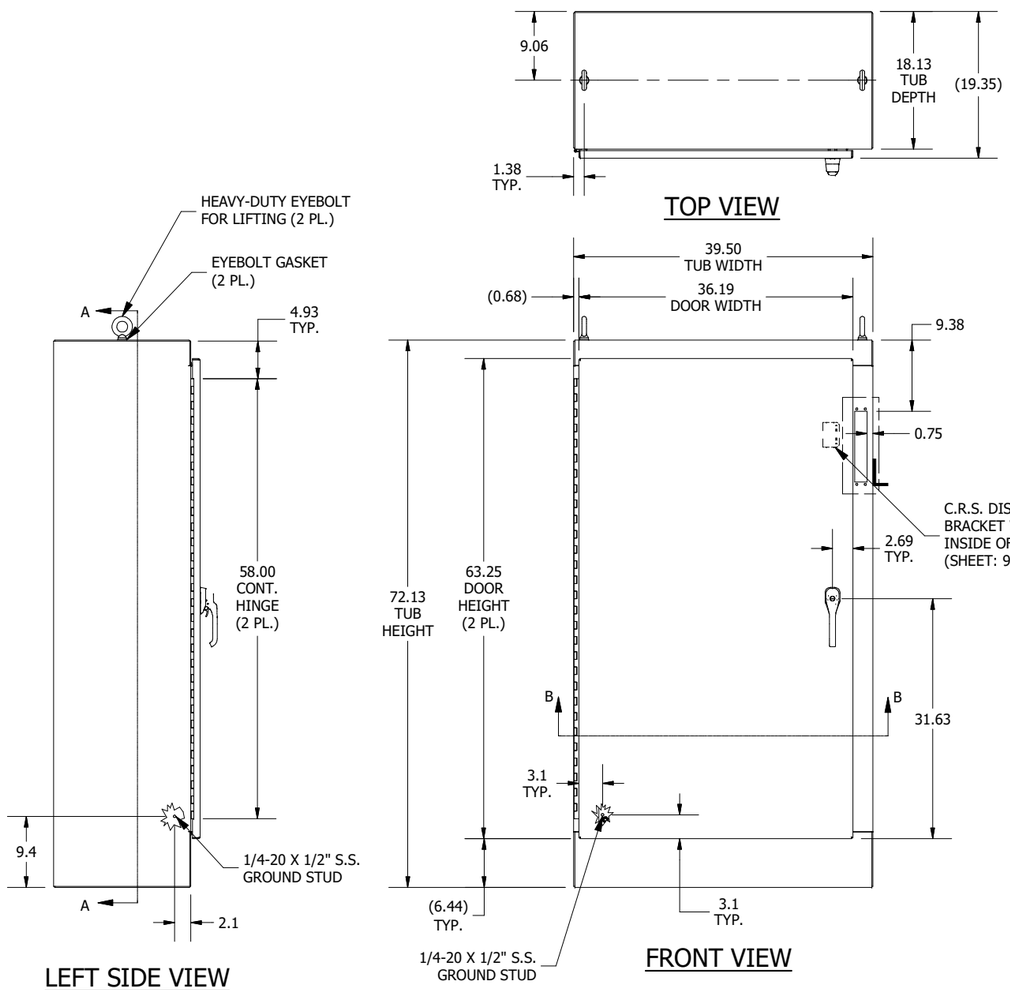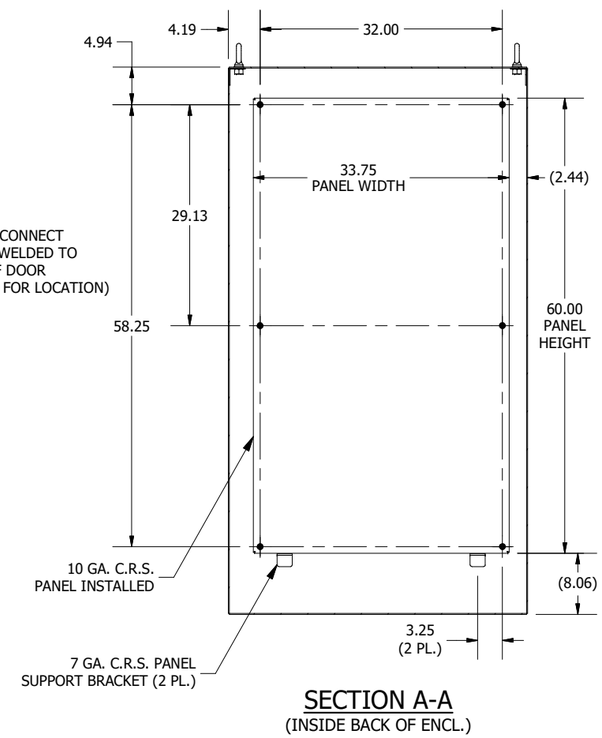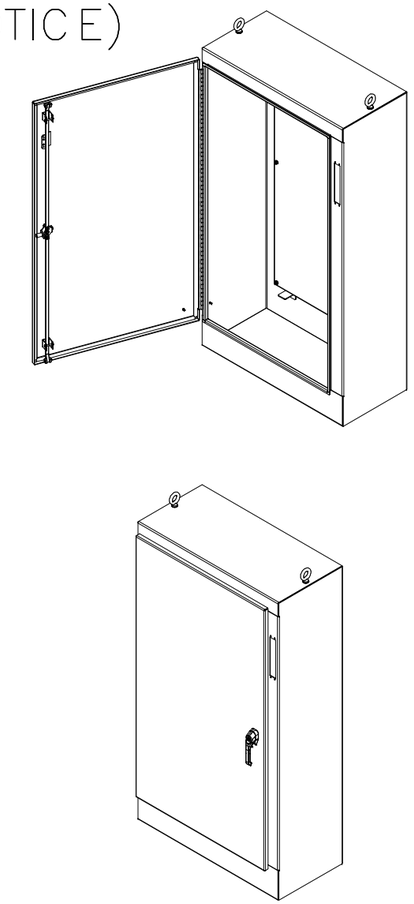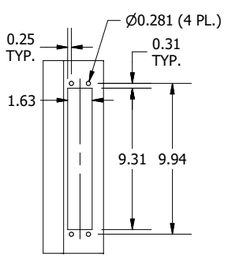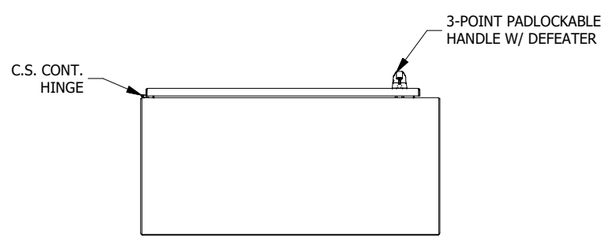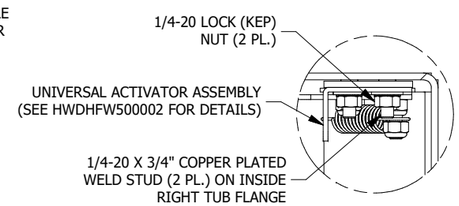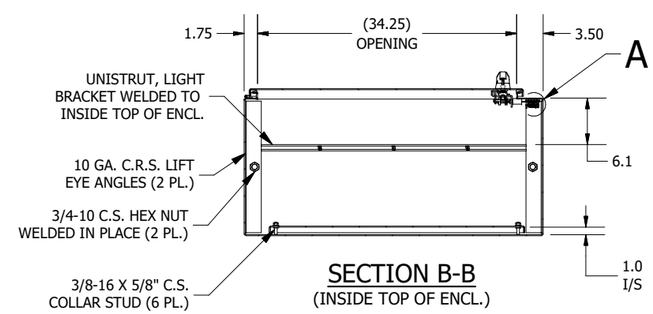
THIS DRAWING IS PROPERTY OF HUBBELL INC. WIEGMANN
ALL INFORMATION IS PROPRIETARY AND NOT TO BE DUPLICATED