REVISION HISTORY			
REV	DESCRIPTION	BY	DATE
A	ECO# 20160606-1L	MR	05/02/2017

NOTES:
1. ALL DIMENSIONS ARE FROM OUTSIDE UNLESS OTHERWISE NOTED (I/S).
2. ENCLOSURE IS FABRICATED FROM 12 GA. 304 STAINLESS STEEL.
3. ALL SEAMS ARE CONTINUOUSLY WELDED & GROUND SMOOTH.
4. DOOR IS SEALED WITH FOAM-IN-PLACE GASKET.
5. DOOR IS SECURED SHUT WITH A 3-POINT 316 S.S. PADLOCKABLE HANDLE WITH BUILT IN DEFEATER.
6. A 10 GA. CARBON STEEL BACK PANEL IS INSTALLED PER DRAWING.
7. FINISH: EXTERIOR - STANDARD GRAINED FINISH.
   INTERIOR - STANDARD COMMERCIAL FINISH.
   PANEL - WHITE POLYESTER POWDER (SMOOTH).
8. ENCLOSURE IS RATED UL TYPE 4X.

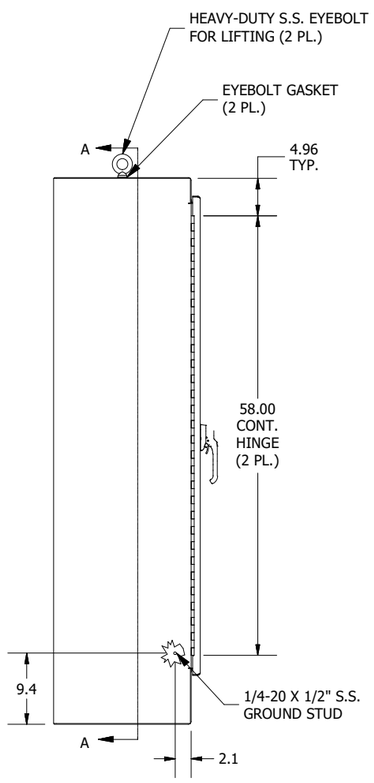

LEFT SIDE VIEW

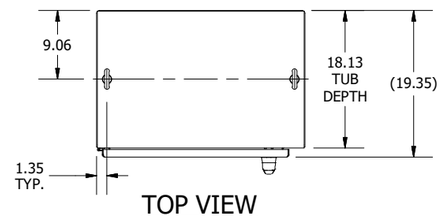

TOP VIEW

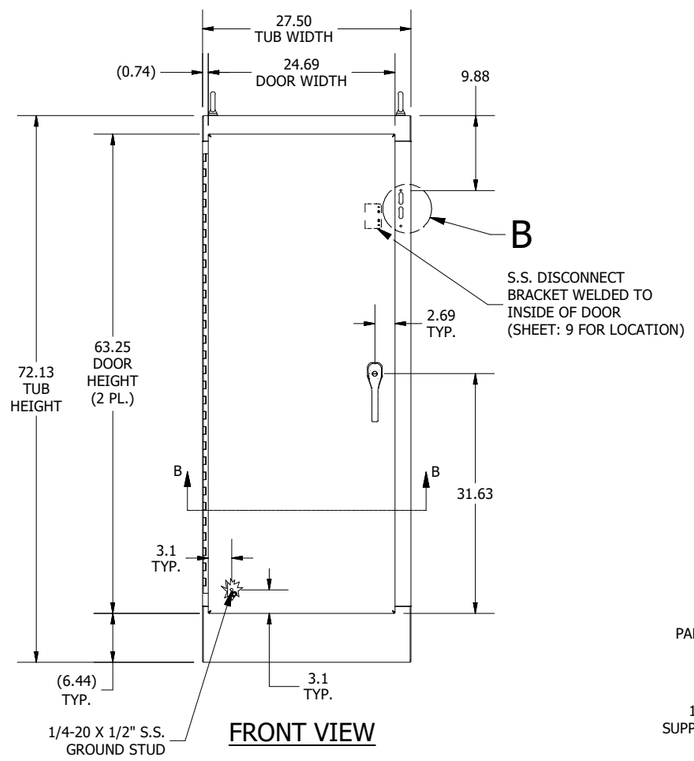

FRONT VIEW

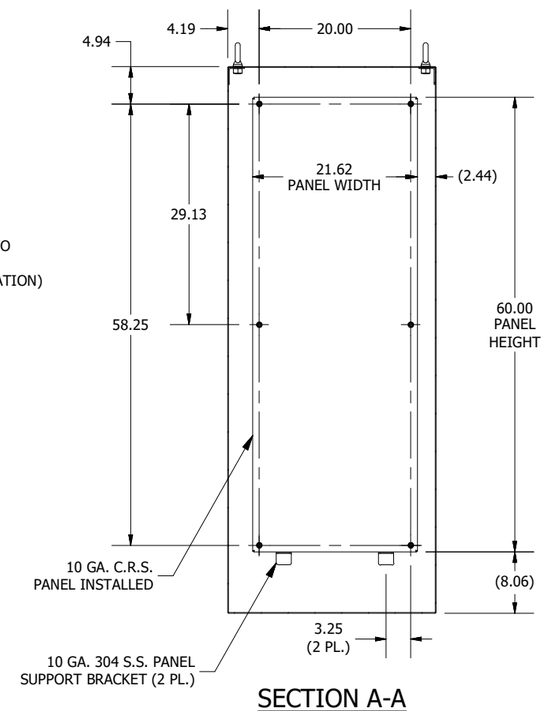

SECTION A-A
(INSIDE BACK OF ENCL.)

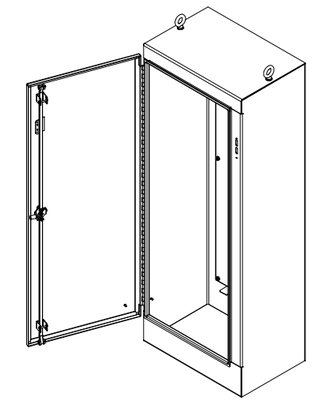

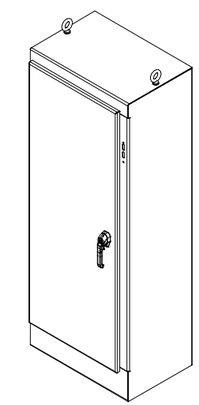

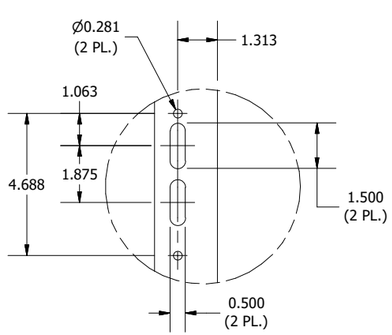

DETAIL B
(DISCONNECT CUTOUT DETAIL)

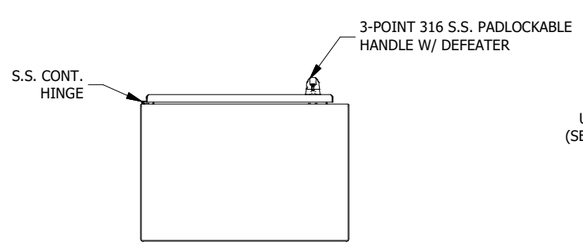

BOTTOM VIEW

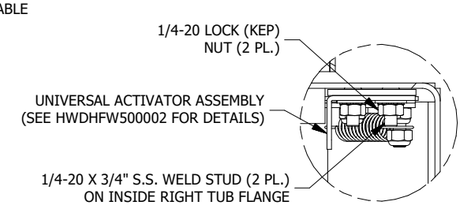

DETAIL A
(UNIV. ACTIVATOR INSTALL)

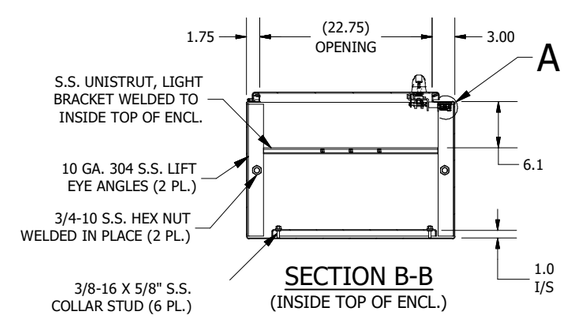

SECTION B-B
(INSIDE TOP OF ENCL.)

PART#: WA72XM2718SSN4
(DATA SUBJECT TO CHANGE WITHOUT NOTICE)

THIS DRAWING IS PROPERTY OF HUBBELL INC. WIEGMANN
ALL INFORMATION IS PROPRIETARY AND NOT TO BE DUPLICATED