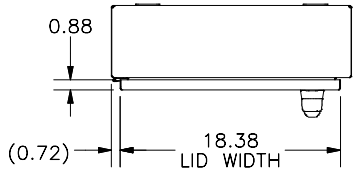

TOP VIEW

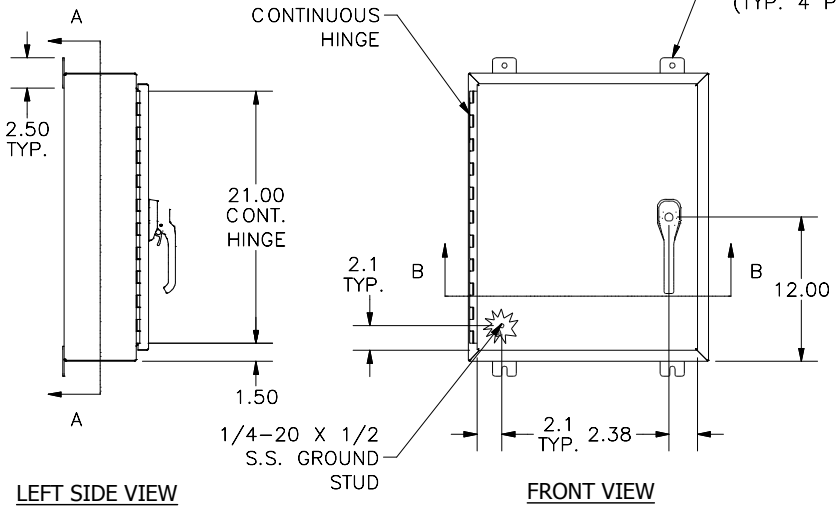

LEFT SIDE VIEW

FRONT VIEW

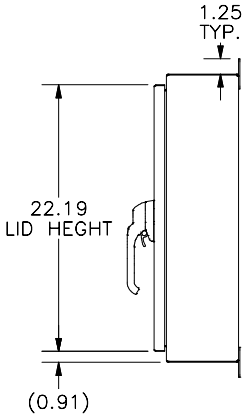

RIGHT SIDE VIEW

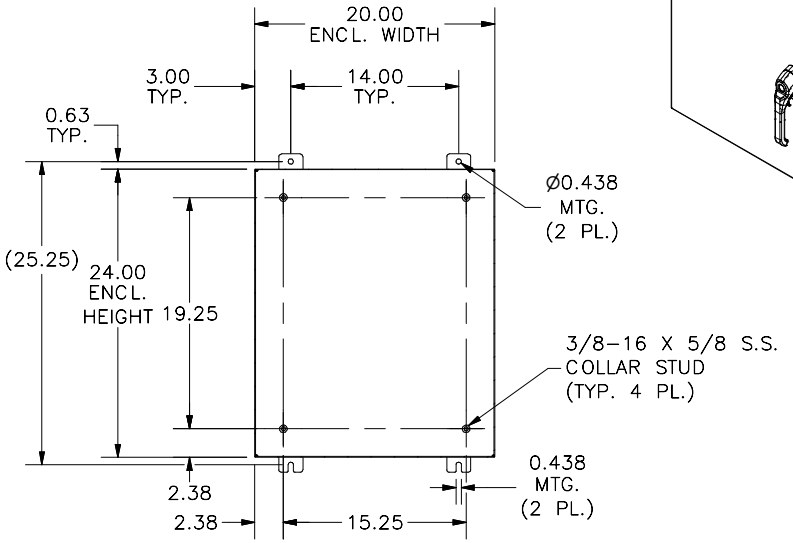

SECTION A-A
(INSIDE BACK OF ENCLOSURE)

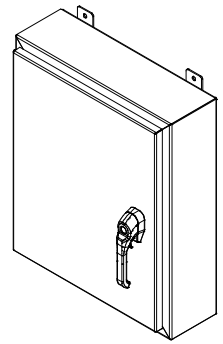

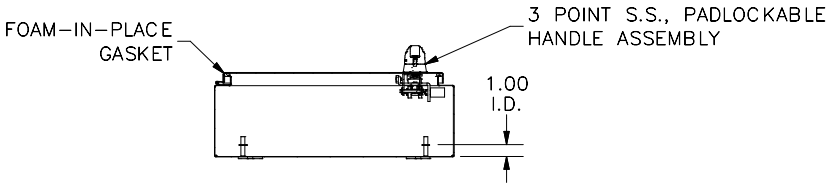

SECTION B-B
(INSIDE TOP OF ENCLOSURE)

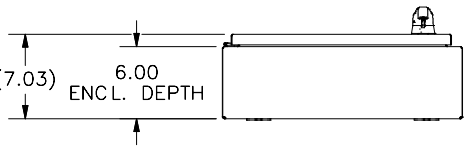

BOTTOM VIEW

PART#: SSN42420063PT
(DATA SUBJECT TO CHANGE WITHOUT NOTICE)

THIS DRAWING IS PROPERTY OF HUBBELL INC. WIEGMANN
ALL INFORMATION IS PROPRIETARY AND NOT TO BE DUPLICATED