REVISION HISTORY			
REV	DESCRIPTION	BY	DATE
A	ECO#: HFW161018-02	VD	02/06/2017

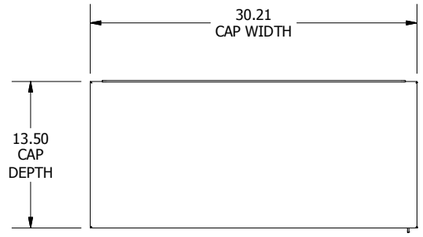

TOP VIEW

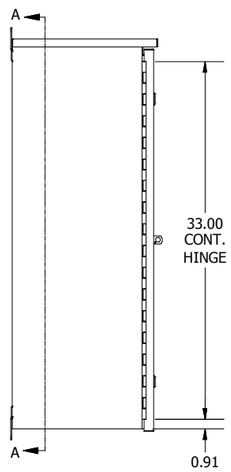

LEFT SIDE VIEW

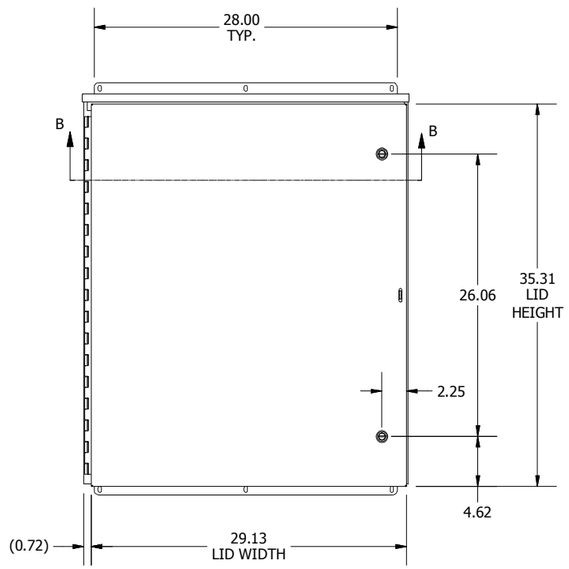

FRONT VIEW

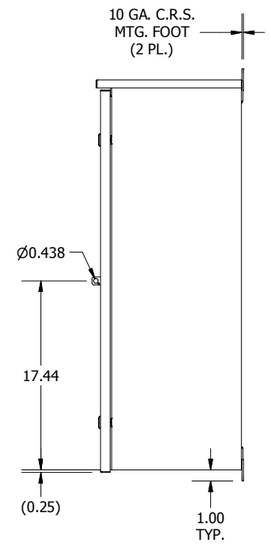

RIGHT SIDE VIEW

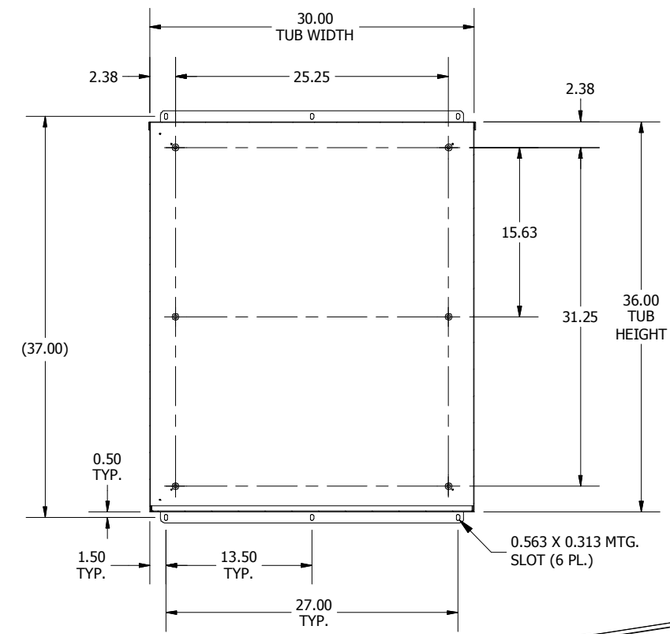

SECTION A-A
(INSIDE BACK OF ENCL.)

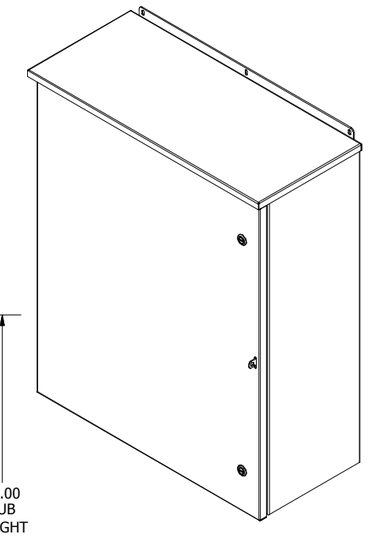

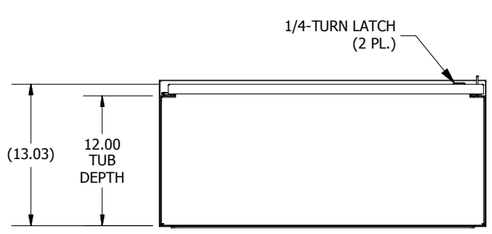

BOTTOM VIEW

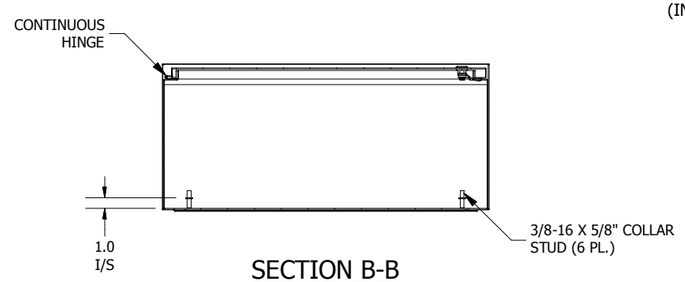

SECTION B-B
(INSIDE TOP OF ENCL.)

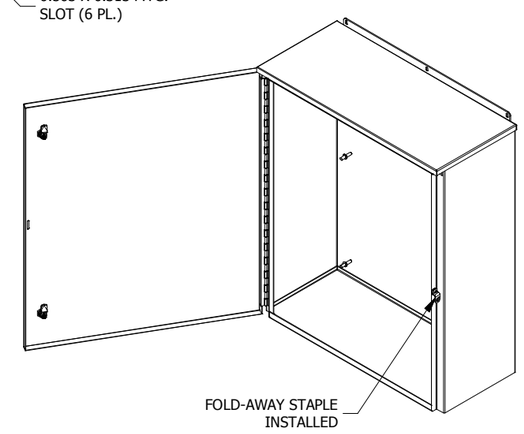

NOTES:
1. ALL DIMENSIONS ARE FROM OUTSIDE UNLESS OTHERWISE NOTED.
2. ENCLOSURE IS FABRICATED FROM 14 GA. CARBON STEEL.
3. COLLAR STUDS ARE PROVIDED FOR MOUNTING OPTIONAL SUB PANEL.
4. ENCLOSURE IS WELDED TOGETHER.
5. FINISH: ANSI-61 GRAY TEXTURE POLYESTER POWDER (INTERIOR/EXTERIOR).
6. ENCLOSURE IS RATED UL TYPE 3R.

DIMENSIONS ARE IN INCHES (MM). TOLERANCES UNLESS OTHERWISE SPECIFIED ARE AS FOLLOWS:
.X = ±.06 (1.6)
.XX = ±.031 (.8)
.XXX = ±.016 (.25)
Ø = ±.005
ANGLE TOL ± 1°

HUBBELL® WIEGMANN®
FREEBURG , ILLINOIS , USA

–NOTICE– THIS DRAWING IS THE PROPERTY OF WIEGMANN, A DIVISION OF HUBBELL INCORPORATED. IT IS LOANED TO YOU AND MUST NOT BE USED IN ANY WAY DETRIMENTAL TO THE INTEREST OF WIEGMANN.

PART NUMBER: RHC363012	MATERIAL: SEE NOTE	SCALE: NONE	CHK'D DATE: 7/10/2014
		DRAWN BY: PS	CREATED ON: 7/10/2014
		CHK'D BY: VR	DWG. NO. HWDRHC363012_1 / REV. A
DESCRIPTION: RHC, NEMA 3R ENCL., CS, 36X30X12			SHEET 1 OF 9

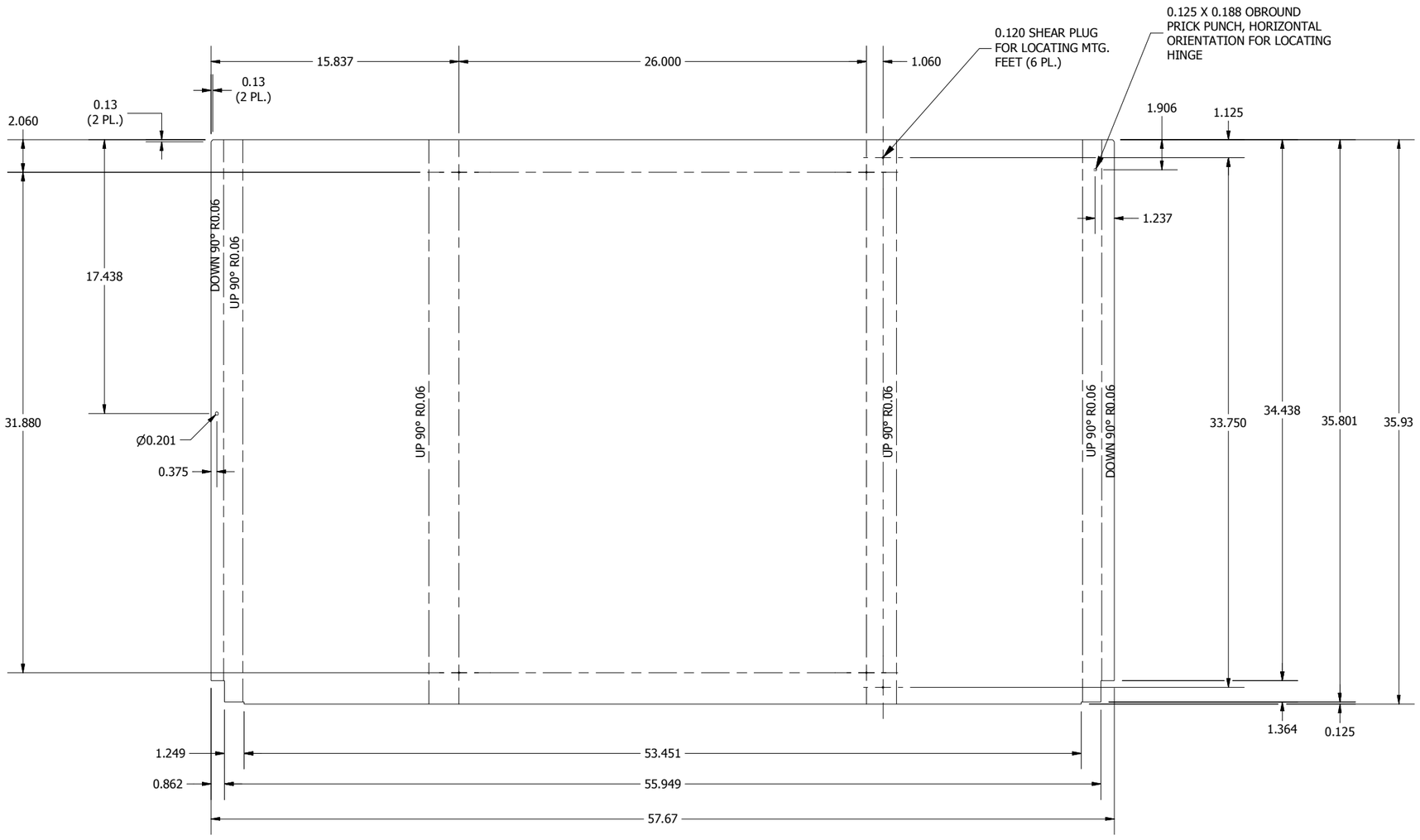

BLR FLAT PATTERN VIEW

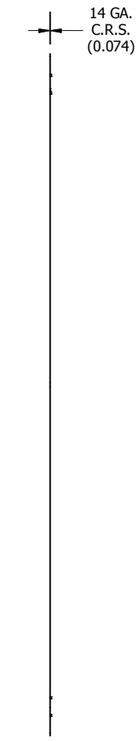

FLAT SIDE VIEW

DIMENSIONS ARE IN INCHES (MM). TOLERANCES UNLESS OTHERWISE SPECIFIED ARE AS FOLLOWS:

.X = ±.06 (1.6)
.XX = ±.031 (.8)
.XXX = ±.016 (.25)
Ø = ±.005
ANGLE TOL ± 1°

HUBBELL® WIEGMANN®
FREEBURG , ILLINOIS , USA

-NOTICE- THIS DRAWING IS THE PROPERTY OF WIEGMANN, A DIVISION OF HUBBELL INCORPORATED. IT IS LOANED TO YOU AND MUST NOT BE USED IN ANY WAY DETRIMENTAL TO THE INTEREST OF WIEGMANN.

PART NUMBER: RHC363012BLR	MATERIAL: SEE NOTE	SCALE: NONE	CHK'D DATE: 7/10/2014	
		DRAWN BY: PS	CREATED ON: 7/10/2014	
		CHK'D BY: VR	DWG. NO. HWDRHC363012_2.1	REV. A
DESCRIPTION: RHC, BLR, MEDIUM, CS, 36X30X12			SHEET 2 OF 9	

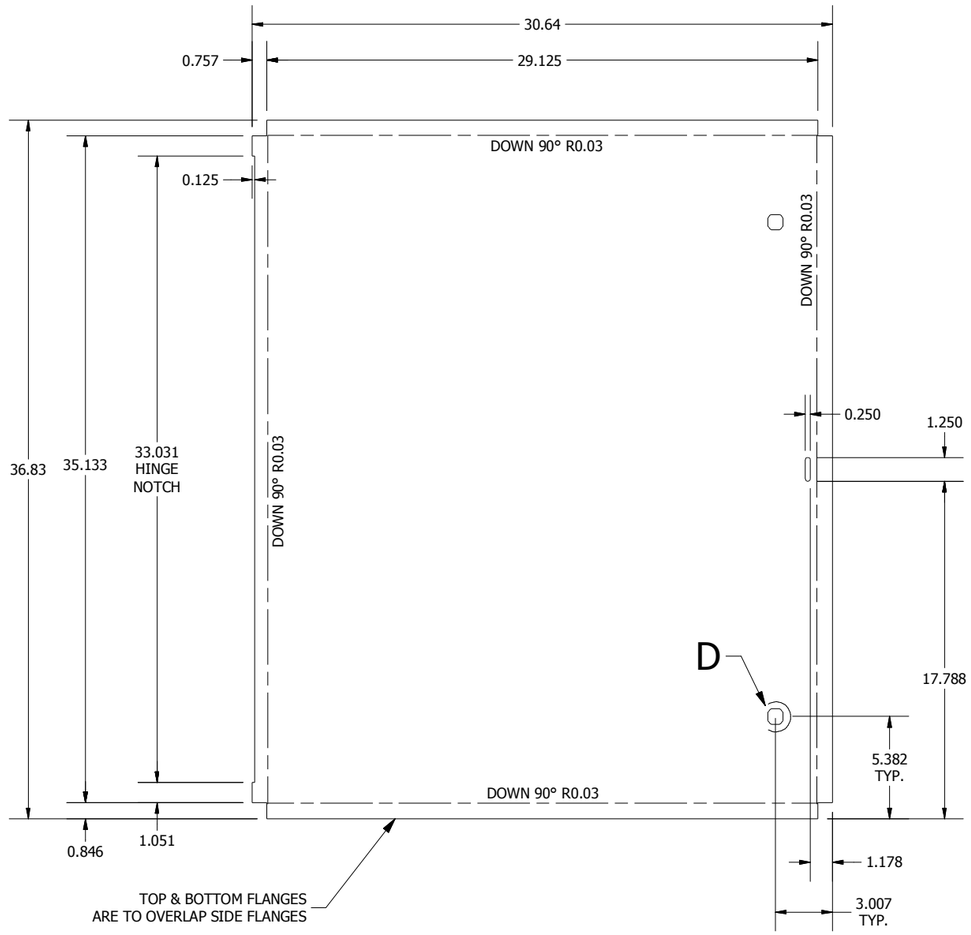

LID FLAT PATTERN VIEW

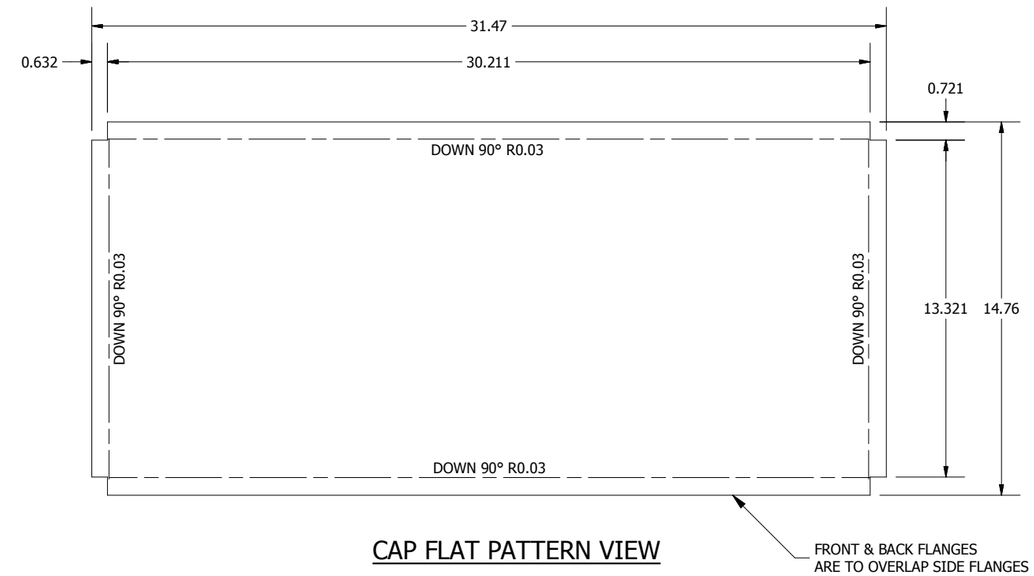

CAP FLAT PATTERN VIEW

FLAT SIDE VIEW

FLAT SIDE VIEW

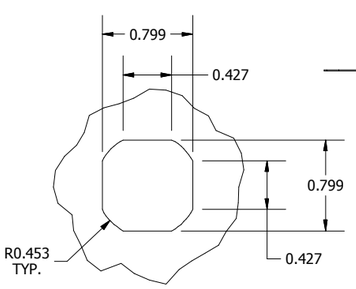

DETAIL D
(LATCH PUNCHING DETAIL)

DIMENSIONS ARE IN INCHES (MM). TOLERANCES UNLESS OTHERWISE SPECIFIED ARE AS FOLLOWS:

.X = ±.06 (1.6)
.XX = ±.031 (.8)
.XXX = ±.016 (.25)
Ø = ±.005
ANGLE TOL ± 1°

HUBBELL®

WIEGMANN®

FREEBURG , ILLINOIS , USA

–NOTICE– THIS DRAWING IS THE PROPERTY OF WIEGMANN, A DIVISION OF HUBBELL INCORPORATED. IT IS LOANED TO YOU AND MUST NOT BE USED IN ANY WAY DETRIMENTAL TO THE INTEREST OF WIEGMANN.

PART NUMBER: RHC3630LID	MATERIAL: SEE NOTE	SCALE: NONE	CHK'D DATE: 7/10/2014
		DRAWN BY: PS	CREATED ON: 7/10/2014
		CHK'D BY: VR	DWG. NO. HWDRHC363012_2.2 / REV. A
DESCRIPTION: RHC, LID, CS, NEMA 3R, 36X30			SHEET 3 OF 9

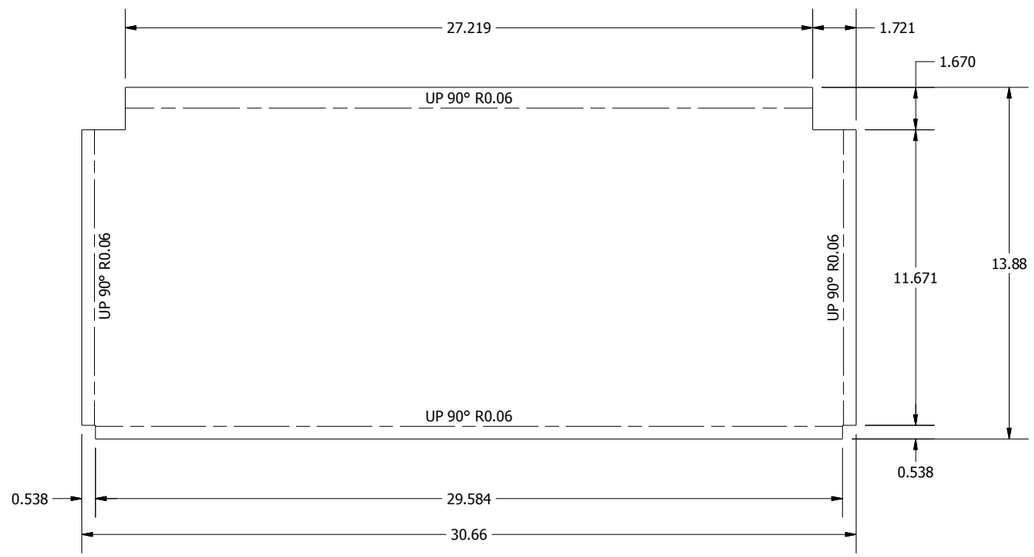

BOTTOM ENDWALL FLAT PATTERN VIEW

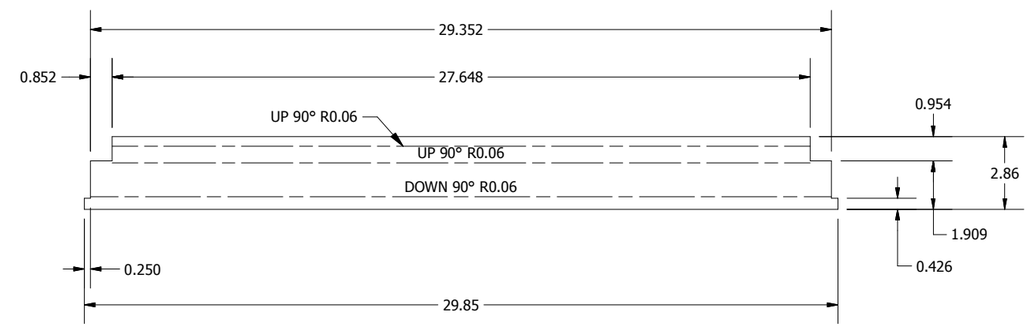

TOP ENDWALL FLAT PATTERN VIEW

FLAT SIDE VIEW

FLAT SIDE VIEW

DIMENSIONS ARE IN INCHES (MM). TOLERANCES UNLESS OTHERWISE SPECIFIED ARE AS FOLLOWS:

.X = ±.06 (1.6)
.XX = ±.031 (.8)
.XXX = ±.016 (.25)
Ø = ±.005
ANGLE TOL ± 1°

HUBBELL®

WIEGMANN®

FREEBURG , ILLINOIS , USA

-NOTICE- THIS DRAWING IS THE PROPERTY OF WIEGMANN, A DIVISION OF HUBBELL INCORPORATED. IT IS LOANED TO YOU AND MUST NOT BE USED IN ANY WAY DETRIMENTAL TO THE INTEREST OF WIEGMANN.

PART NUMBER: RHC3012BTM	MATERIAL: SEE NOTE	SCALE: NONE	CHK'D DATE: 7/10/2014
		DRAWN BY: PS	CREATED ON: 7/10/2014
		CHK'D BY: VR	DWG. NO. HWDRHC363012_2.3 / REV. A
DESCRIPTION: RHC, BTM, CS, NEMA 3R, 30X12			SHEET 4 OF 9

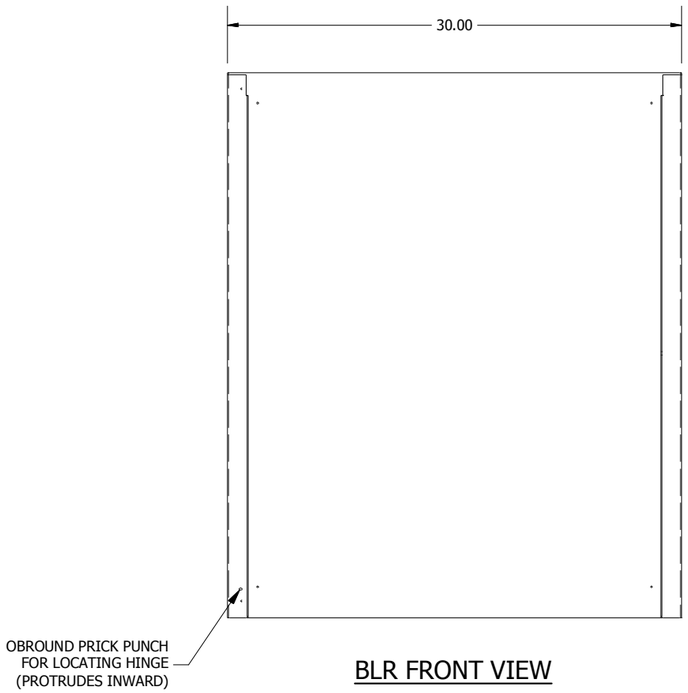

BLR FRONT VIEW

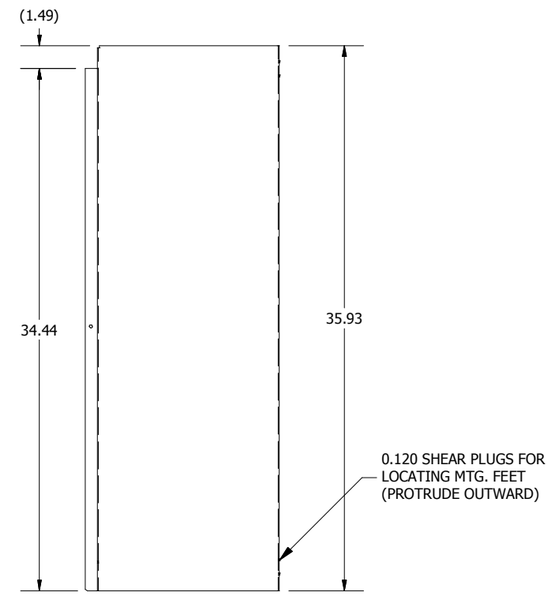

SIDE VIEW

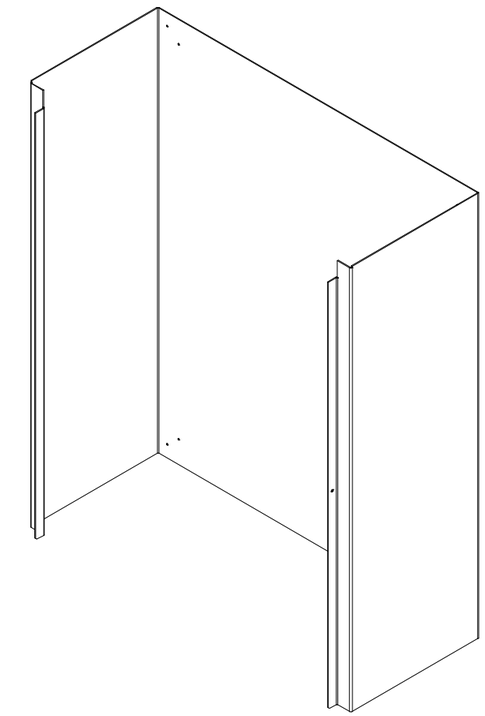

BOTTOM VIEW

DIMENSIONS ARE IN INCHES (MM). TOLERANCES UNLESS OTHERWISE SPECIFIED ARE AS FOLLOWS:

.X = ±.06 (1.6)
.XX = ±.031 (.8)
.XXX = ±.016 (.25)
Ø = ±.005
ANGLE TOL ± 1°

HUBBELL®

WIEGMANN®

FREEBURG , ILLINOIS , USA

–NOTICE– THIS DRAWING IS THE PROPERTY OF WIEGMANN, A DIVISION OF HUBBELL INCORPORATED. IT IS LOANED TO YOU AND MUST NOT BE USED IN ANY WAY DETRIMENTAL TO THE INTEREST OF WIEGMANN.

PART NUMBER: RHC363012BLR	MATERIAL: SEE NOTE	SCALE: NONE	CHK'D DATE: 7/10/2014
		DRAWN BY: PS	CREATED ON: 7/10/2014
		CHK'D BY: VR	DWG. NO. HWDRHC363012_3.1 — REV. A
DESCRIPTION: RHC, BLR, MEDIUM, CS, 36X30X12			SHEET 5 OF 9

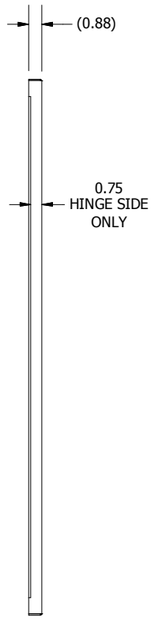

LEFT SIDE VIEW

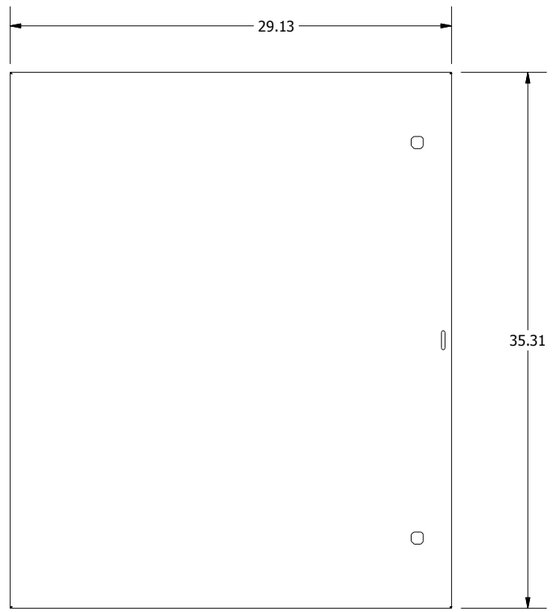

LID FRONT VIEW

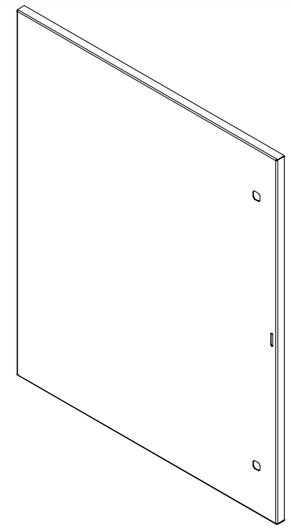

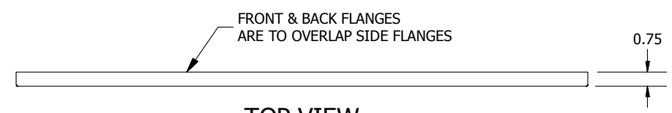

TOP VIEW

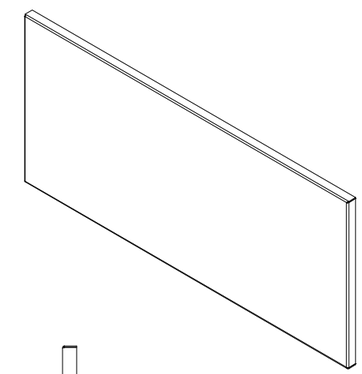

BOTTOM VIEW

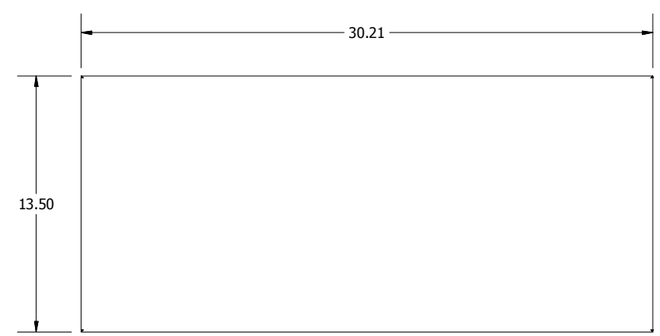

CAP FRONT VIEW

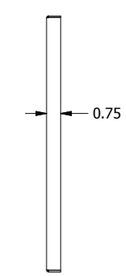

SIDE VIEW

DIMENSIONS ARE IN INCHES (MM). TOLERANCES UNLESS OTHERWISE SPECIFIED ARE AS FOLLOWS:

.X = ±.06 (1.6)
.XX = ±.031 (.8)
.XXX = ±.016 (.25)
Ø = ±.005
ANGLE TOL ±1°

HUBBELL®

WIEGMANN®

FREEBURG , ILLINOIS , USA

–NOTICE– THIS DRAWING IS THE PROPERTY OF WIEGMANN, A DIVISION OF HUBBELL INCORPORATED. IT IS LOANED TO YOU AND MUST NOT BE USED IN ANY WAY DETRIMENTAL TO THE INTEREST OF WIEGMANN.

PART NUMBER: RHC3630LID	MATERIAL: SEE NOTE	SCALE: NONE	CHK'D DATE: 7/10/2014	
		DRAWN BY: PS	CREATED ON: 7/10/2014	
		CHK'D BY: VR	DWG. NO. HWDRHC363012_3.2	REV. A
DESCRIPTION: RHC, LID, CS, NEMA 3R, 36X30			SHEET 6 OF 9	

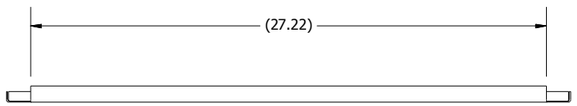

BOTTOM ENDWALL FRONT VIEW

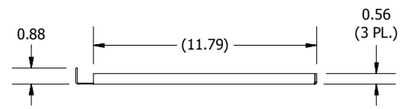

SIDE VIEW

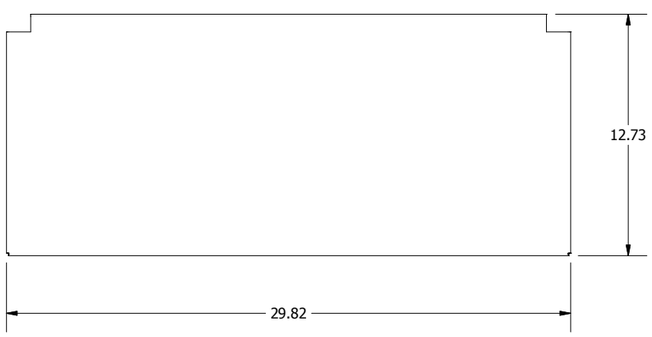

BOTTOM VIEW

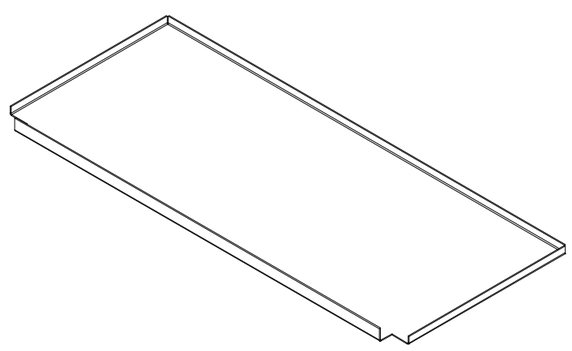

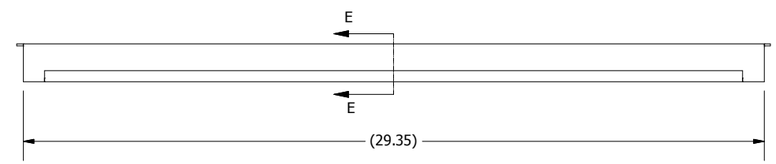

TOP ENDWALL FRONT VIEW

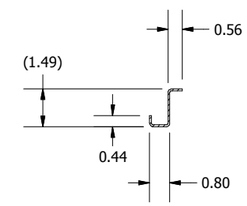

SECTION E-E

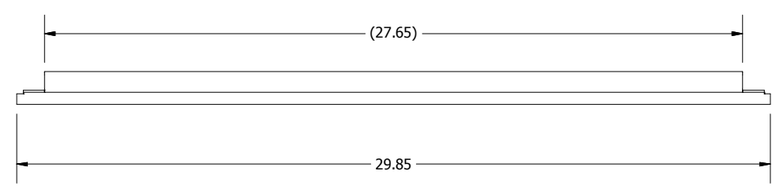

BOTTOM VIEW

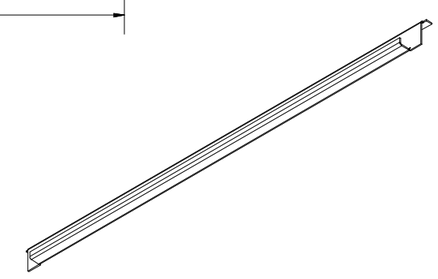

DIMENSIONS ARE IN INCHES (MM). TOLERANCES UNLESS OTHERWISE SPECIFIED ARE AS FOLLOWS:

.X = ±.06 (1.6)
.XX = ±.031 (.8)
.XXX = ±.016 (.25)
Ø = ±.005
ANGLE TOL ±1°

HUBBELL® WIEGMANN®
FREEBURG , ILLINOIS , USA

-NOTICE- THIS DRAWING IS THE PROPERTY OF WIEGMANN, A DIVISION OF HUBBELL INCORPORATED. IT IS LOANED TO YOU AND MUST NOT BE USED IN ANY WAY DETRIMENTAL TO THE INTEREST OF WIEGMANN.

PART NUMBER: RHC3012BTM	MATERIAL: SEE NOTE	SCALE: NONE	CHK'D DATE: 7/10/2014
		DRAWN BY: PS	CREATED ON: 7/10/2014
		CHK'D BY: VR	DWG. NO. HWDRHC363012_3.3 / REV. A
DESCRIPTION: RHC, BTM, CS, NEMA 3R, 30X12			SHEET 7 OF 9

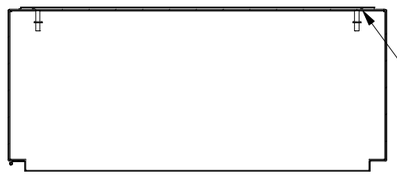

SECTION H-H

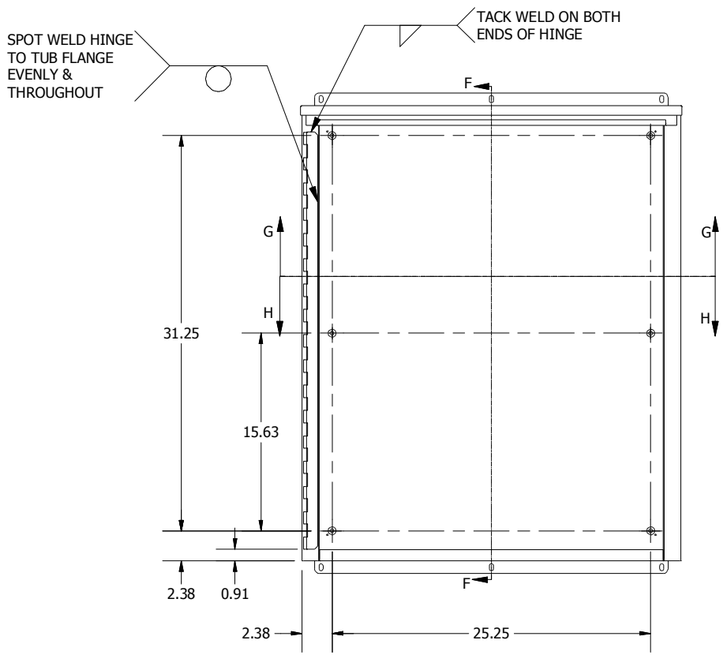

TUB WELD FRONT VIEW

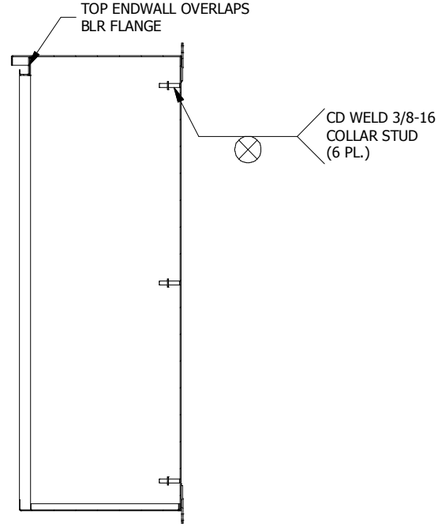

SECTION F-F

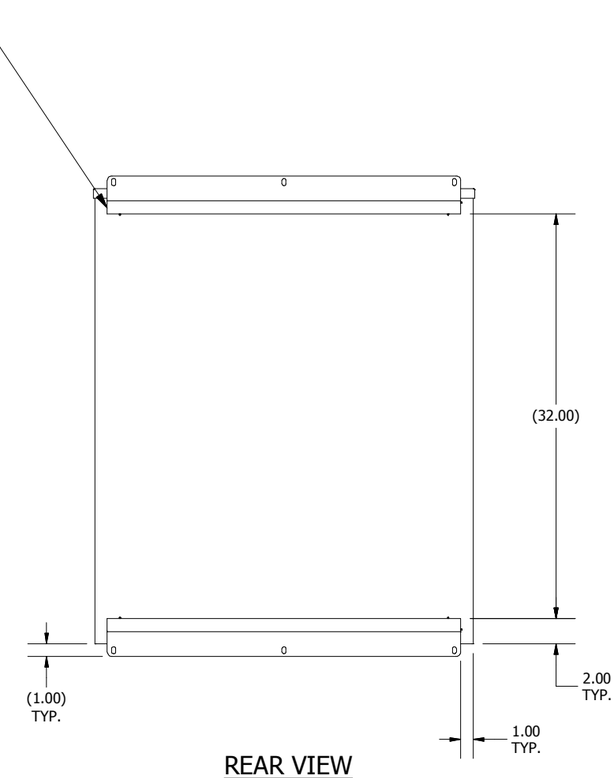

REAR VIEW

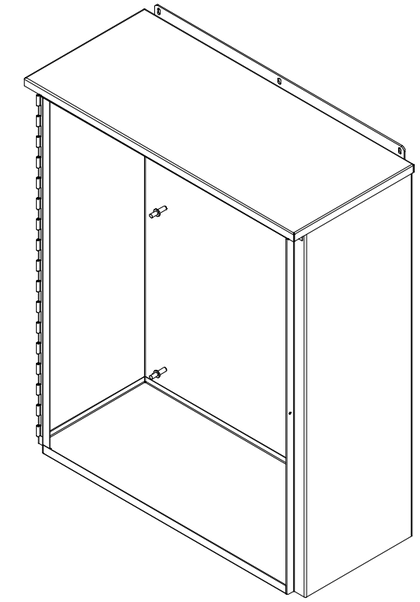

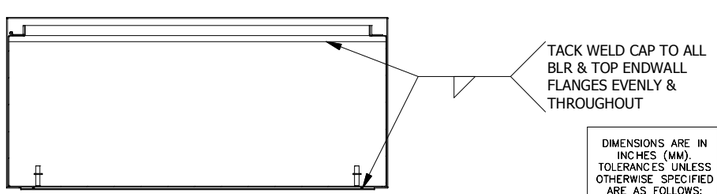

SECTION G-G

DIMENSIONS ARE IN INCHES (MM). TOLERANCES UNLESS OTHERWISE SPECIFIED ARE AS FOLLOWS:

.X = ±.06 (1.6)
.XX = ±.031 (.8)
.XXX = ±.016 (.25)
Ø = ±.005
ANGLE TOL ±1°

HUBBELL® WIEGMANN®
FREEBURG , ILLINOIS , USA

-NOTICE- THIS DRAWING IS THE PROPERTY OF WIEGMANN, A DIVISION OF HUBBELL INCORPORATED. IT IS LOANED TO YOU AND MUST NOT BE USED IN ANY WAY DETRIMENTAL TO THE INTEREST OF WIEGMANN.

PART NUMBER: RHC363012	MATERIAL: SEE NOTE	SCALE: NONE	CHK'D DATE: 7/10/2014	
		DRAWN BY: PS	CREATED ON: 7/10/2014	
		CHK'D BY: VR	DWG. NO. HWDRHC363012_4.1	REV. A
DESCRIPTION: RHC, NEMA 3R ENCL., CS, 36X30X12			SHEET 8 OF 9	

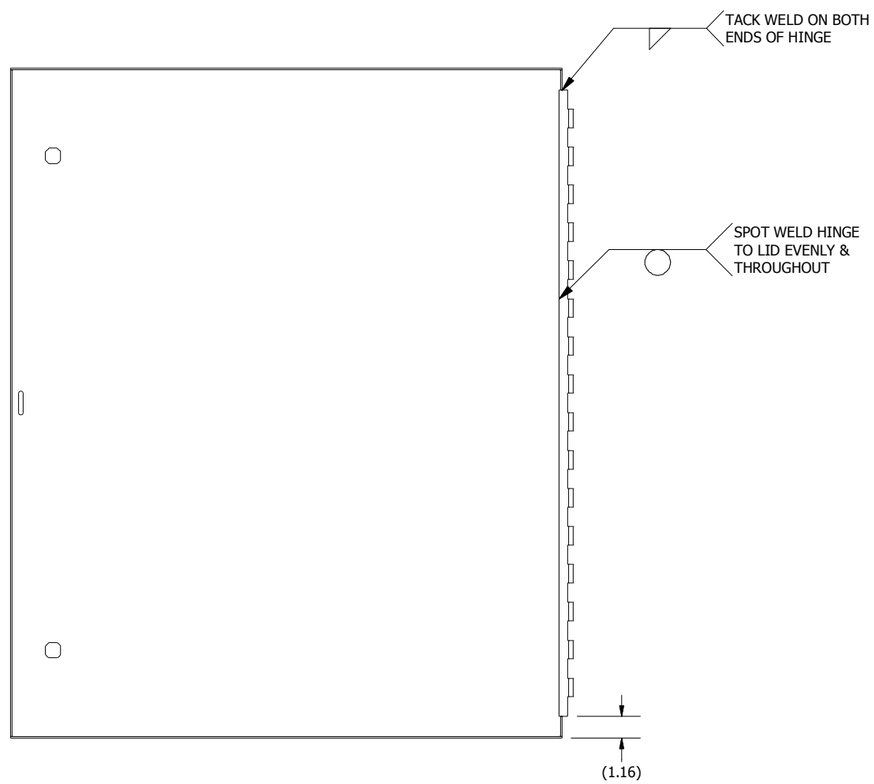

LID WELD INSIDE VIEW

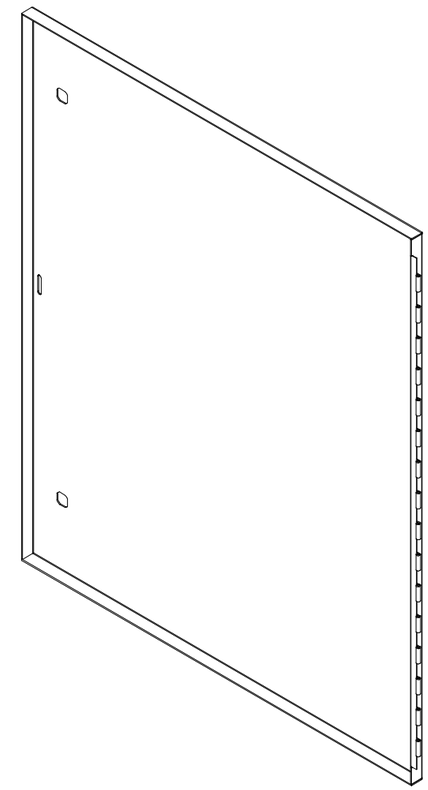

DIMENSIONS ARE IN INCHES (MM). TOLERANCES UNLESS OTHERWISE SPECIFIED ARE AS FOLLOWS: .X = ±.06 (1.6) .XX = ±.031 (.8) .XXX = ±.016 (.25) Ø = ±.005 ANGLE TOL ±1°	HUBBELL® WIEGMANN® FREEBURG , ILLINOIS , USA	PART NUMBER: RHC363012	MATERIAL: SEE NOTE	SCALE: NONE	CHK'D DATE: 7/10/2014
				DRAWN BY: PS	CREATED ON: 7/10/2014
				CHK'D BY: VR	DWG. NO. HWDRHC363012_4.2 / REV. A
		DESCRIPTION: RHC, NEMA 3R ENCL., CS, 36X30X12			SHEET 9 OF 9

–NOTICE– THIS DRAWING IS THE PROPERTY OF WIEGMANN, A DIVISION OF HUBBELL INCORPORATED. IT IS LOANED TO YOU AND MUST NOT BE USED IN ANY WAY DETRIMENTAL TO THE INTEREST OF WIEGMANN.