TOSHIBA

TOSHIBA INTERNATIONAL CORPORATION

Motors, Drives, Controls, & PLCs

2020 Industrial Catalog

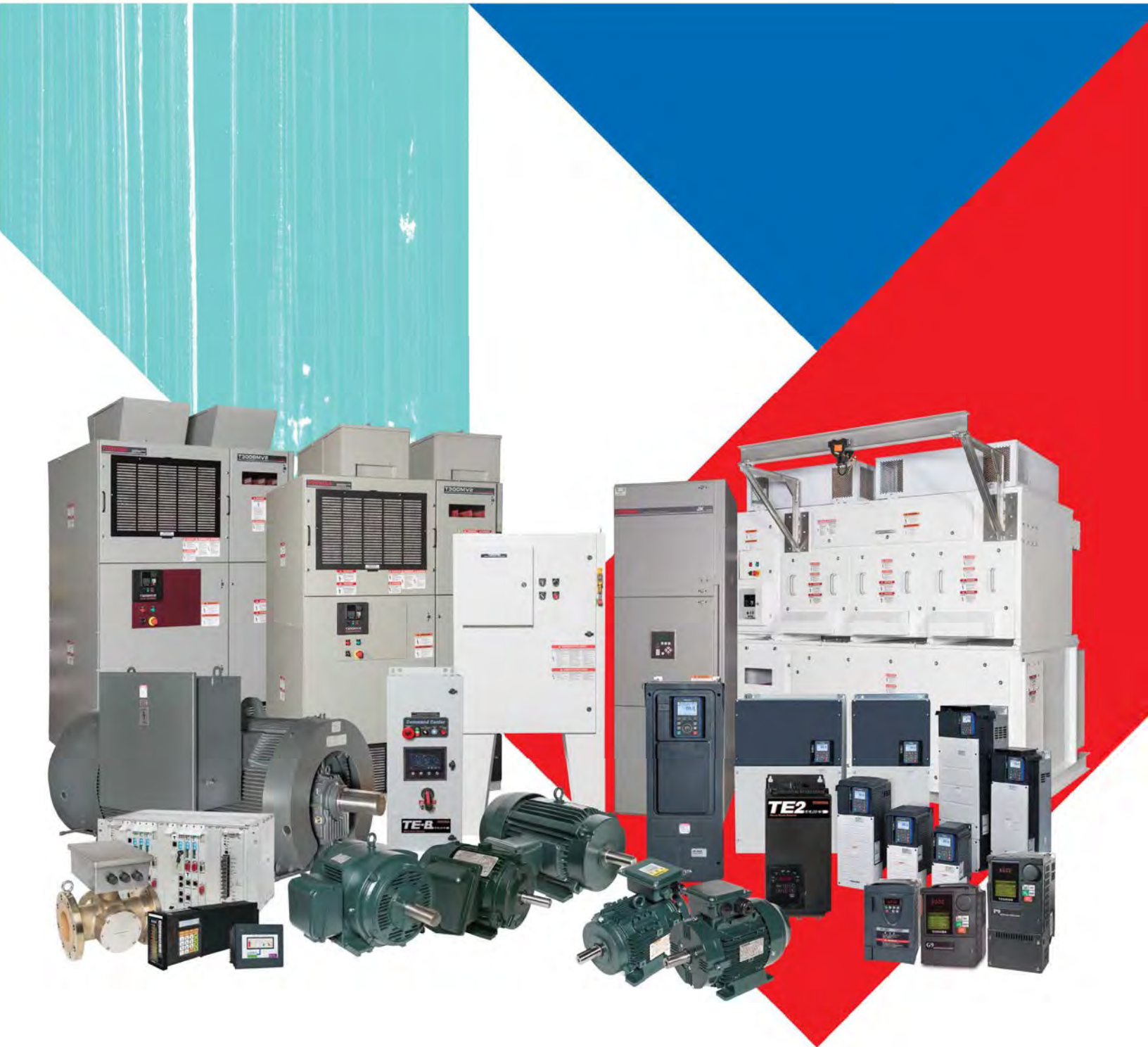

Connecting Our Solutions to Your Possibilities

Motors that are as tough as they are reliable.

Drives that can withstand the elements.

By combining the power of invention with our expertise and desire for a better world, we imagine things that have never been – and make them a reality.

We are Toshiba.

About Toshiba International Corporation

Toshiba International Corporation (TIC) is a Toshiba America Inc. (TAI) Group Company, a wholly owned subsidiary of Toshiba Corporation, and comprised of four divisions – Motors & Drives, Power Electronics, Automotive, and Transmission & Distribution Systems. Headquartered in Houston, Texas, TIC provides application solutions to a wide range of industries including general industrial, oil and gas, utilities, datacenters, HVAC, water/wastewater, and mining. For more information about TIC, please visit www.toshiba.com/tic.

Most TIC products are manufactured at our one million square foot state-of-the-art manufacturing facility, in Houston, Texas. We are proud to be a single-source solution for our customers. Our comprehensive product offering and large installed base demonstrates our customers' confidence in choosing Toshiba. Since most of our products are manufactured under one roof, we can offer customized solutions to meet your application needs. Using our leading-edge testing facility, we test our products together, as a complete system, before they go out into the field-ensuring the highest level of quality, performance, and reliability.

Disclaimer:

Toshiba has made every effort necessary to ensure the accuracy of the contents in this catalog. However, Toshiba cannot be held liable for errors made from changing models/catalog numbers, or typographical and pictorial errors that may have resulted during the compilation of this catalog. All product data and dimensions provided shall be used for reference only. The weights listed in this catalog are estimated and cannot be guaranteed. Prices are subject to change at any given time without notice.

Toshiba cannot assume responsibility for the selection, installation, operation, and maintenance of our products. Only the purchaser, end user, or a qualified underwriter should identify and select the appropriate product that meets the requirements of the intended application.

General Product Warranty

Toshiba General Product Warranty:

Unless a different warranty is stated herein, affixed to the Goods by the manufacturer or TIC, or is specified in writing in any maintenance or operating instructions pertaining to such Goods, TIC warrants that the Goods sold by TIC to Purchaser will be free from defects in materials and workmanship. This warranty shall expire eighteen (18) months after the date on which the Goods are delivered by TIC to the initial purchaser or twelve (12) months after the Goods are first placed in operation, whichever period shall first expire. If the Goods fail to conform to the foregoing warranty, TIC shall, at its sole discretion, repair, replace or update, free of charge, or refund the purchase price paid for any such nonconforming Goods; provided Purchaser (1) promptly notifies TIC in writing of the nonconformity, (2) furnishes TIC satisfactory proof thereof, and (3) if requested by TIC, returns the nonconforming equipment, part or software to TIC and pays all expenses incurred in connection with such return. The repaired, replacement or equipment, part or software, shall be delivered, free of charge, to Purchaser, FCA TIC designated facility or at TIC's option, FCA a TIC authorized service shop, not loaded on truck or other carrier (INCOTERMS 2010). Purchaser shall pay all costs following such delivery, including, without limitation, all handling, transportation, assembly, installation, insurance, testing, and inspection charges. The warranty excludes (1) normal wear and tear; (2) Goods that have not been properly stored, assembled, installed, serviced, maintained, operated, or used within the limits of rated capacity and normal usage; (3) Goods not used in accordance with current operating and maintenance instructions furnished by TIC, and (4) Goods that have been altered or modified in any manner without the written consent of TIC. **THE FOREGOING OBLIGATION TO REPAIR, REPLACE, UPDATE OR REFUND THE PURCHASE PRICE PAID FOR THE GOODS SHALL BE THE SOLE AND EXCLUSIVE REMEDY OF PURCHASER, ITS CUSTOMERS AND USERS OF THE GOODS FOR THE BREACH OF THE FOREGOING WARRANTY. TIC SHALL HAVE NO OBLIGATION TO DISASSEMBLE ANY NONCONFORMING GOODS OR TO INSTALL ANY REPAIRED OR REPLACEMENT PART, EQUIPMENT OR SOFTWARE OR TO PAY ANY COSTS INCURRED IN CONNECTION WITH SUCH DISASSEMBLY OR INSTALLATION. THERE ARE NO OTHER WARRANTIES AND TIC HEREBY EXPRESSLY DISCLAIMS ALL OTHER EXPRESS, STATUTORY AND IMPLIED WARRANTIES, INCLUDING, WITHOUT LIMITATION, IMPLIED WARRANTIES OF MERCHANTABILITY AND FITNESS FOR A PARTICULAR PURPOSE.**

Additional Product Specific Warranty:

Please contact Toshiba or your Toshiba Sales Representative.

MOTORS

Low Voltage Motors

ODP General Purpose Motors 3
High & NEMA Premium® Efficiency 4

TEFC General Purpose Motors 10
EQP Global® SD 11
EQP Global® SD C-Face 21
EQP Global® SD Top Mount 28
EQP Global® 840 32
EQP Global® 840 C-Face 40
EQP Global® 841 46
EQP Global® 841 C-Face 53

Explosion Proof Motors 60
EQP Global® XP, TEFC 61
TEFC EQP Global® XP C-Face 66

IEC Motors 71
EQP Global® IEC, TEFC 72
Tosh-ECO® Permanent Magnet, TEFC 77

Definite Purpose Motors 80
EQP Global® Close-Coupled Pump JM, TEFC 81
EQP Global® Close-Coupled Pump JP, TEFC 83
Tosh-ECO® Oil Well Pump, TEFC 85
EQP Global® Cooling Tower, TEFC & TEAO 87
Quarry Duty, TEFC 91
Dry Kiln ODP Motors 95
EQP Global® Brake Motor, TEFC 97
Vertical P-Base Footless,
Normal & Medium Thrust 102

Low Voltage Modifications

Stock Modifications 107

Production Price List 119

Production Modifications 121

Medium Voltage Motors

Open Enclosure
General Purpose Motors 139
Open Drip-Proof 140
Weather-Protected Type I 142
Weather-Protected Type II 148

Totally Enclosed
General Purpose Motors 154
Totally Enclosed Fan Cooled 155
Explosion Proof, TEFC 161
TEFC 840/841 163
Totally Enclosed Air-to-Air Cooled 166
Totally Enclosed Water-to-Air Cooled 171

Medium Voltage Modifications

Production Modifications 177

Motor Appendices

Appendix A 190
Model Number Breakdown Type 1
Model Number Breakdown Type 2

Appendix B 196
Efficiency Tables
Frame Dimensions
Frame Mounting

Appendix C 199
UL & CSA Explosion Proof Classifications
Inverter Capabilities
Division 2 Motors

Appendix D 202
Low Voltage Motor IEC 60034-30
Standards for Efficiency Classes

Appendix E 203
IEC Motors - Dimensional Reference

ADJUSTABLE SPEED DRIVES

Low Voltage ASD

AS3 ASD.....206
Power Unit Pricing & Dimensions 207

AS3 UL Type 12/IP55 ASD.....210
Power Unit Pricing & Dimensions 211

AS3P ASD 212
Part Numbering Convention 213
Assembly Unit Pricing & Dimensions 214
Assembly Unit Options..... 214
AS3 Options Information & Pricing 215

AS1 ASD 219
Power Unit Pricing & Dimensions 220
Options Information & Pricing 225

G9® ASD 229
Power Unit Pricing & Dimensions 230
Assembly Unit Part Numbering Convention 232
Assembly Unit Pricing & Dimensions 233
Assembly Unit Option Information & Pricing 235

P9 ASD.....237
Power Unit Pricing & Dimensions 238
Assembly Unit Part Numbering Convention 240
Assembly Unit Pricing & Dimensions 241
Assembly Unit Option Information & Pricing 243

GX9 ASD 244
Assembly Unit Part Numbering Convention 245
Assembly Unit Pricing & Dimensions 246

S15 ASD..... 248
Power Unit Pricing & Dimensions 249
Option Information & Pricing 250

S11 ASD..... 254
Power Unit Pricing & Dimensions 255
Options Information & Pricing 257

NC3 ASD 259
Power Unit Pricing & Dimensions 260

GX7M Modular ASD 261
Part Numbering Convention 262
Assembly Unit Pricing & Dimensions 263

W7 ASD..... 265
Part Numbering Convention 266
Assembly Unit Pricing & Dimensions 267
Options Information & Pricing 271

WX9 18 Pulse ASD..... 272
Part Numbering Convention 273
Assembly Unit Pricing & Dimensions 274

Plus Pack ASD 275
Part Numbering Convention 276
Unit Pricing & Dimensions..... 277
Options Information & Pricing 280

Low Voltage ASD Options

G9, P9, AS1 ASD Options..... 283

GX7, GX9, W7, Plus Pack ASD 286

External Gateway Options..... 287

G9, P9, AS1 ASD Installed Options..... 289

GX7, GX9, W7, Plus Pack ASD Installed Options 291

NetPac® 292

Installed Gateway Options 293

Common Installed ASD Options 294

Dynamic Braking Resistors..... 298

Reactors & Filters..... 304

Medium Voltage ASD

T300MV2® ASD 317
- Part Numbering Convention 318
- Pricing & Dimensions 319
- Option Information & Pricing 325
- Spare Parts Kits 337
- Heat Loss Data 342

MTX2® ASD 345
- Part Numbering Convention 346
- Pricing & Dimensions 347
- Option Information & Pricing 348
- Spare Parts Kits 350

MTX® ASD 352
- Part Numbering Convention 353
- Pricing & Dimensions 354
- Option Information & Pricing 355
- Spare Parts Kits 359

BMV2 ASD..... 362
- Part Numbering Convention 363
- Pricing & Dimensions 364
- Option Information & Pricing 365

Regen ASD.....367
- Part Numbering Convention 368
- Pricing & Dimensions 369

ASD Appendices

Appendix A 371
- Pricing & Delivery

Appendix B 372
- Warranty Information

Appendix C 373
- Drawing Requests

Appendix D 374
- TOSHcare™ Medium Voltage Power Module Reconditioning Service Program
- Medium Voltage Drives Related Services

POWER APPARATUS & COMPONENTS

Medium Voltage Controllers

JK Series Starters..... 381
- JK400 Series Starters 382
- JK700 Series Starters 383
- JK400 & JK700 Series Pricing 384

JK Solid State Starters Series 387
- JKSSS4 Solid State Starters..... 388
- JKSSS7 Solid State Starters..... 389
- JK Solid State Starter Series Pricing 390

JK Series Part Numbering Convention 391

JK Series Factory-Installed Modifications 392

JK Series Accessories..... 395

Vacuum Contactors

Medium Voltage JK OEM Power Cells..... 397
- JK OEM Power Cell Pricing..... 398

Low & Medium Voltage Vacuum Contactors 399
- Low Voltage Vacuum Contactor Specifications.... 400
- Medium Voltage Vacuum Contactor Specifications 403
- Low & Medium Voltage Contactor Pricing 406
- Low & Medium Voltage Contactor Accessories 407

POWER APPARATUS & COMPONENTS (Cont.)

Low Voltage Solid State Starters

TE2 Series **409**

TE-H Series **411**

TE2 & TE-H Series Dimensions, Weights, Mods **413**

TE2 Series Accessories **414**

Touchscreen Panel **415**

TE-B Series **416**

Vacuum Circuit Breakers

VK/HVK Series **419**

Specifications 420
Part Numbering Convention 421
Pricing & Factory Modifications 422

HV6 Series **423**

Part Numbering Convention 424
Specifications & Pricing 425

OEM Cell Pricing **426**

Accessories **427**

INDUSTRIAL AUTOMATION

Operator Interface Stations

OIS PLUS Series **428**

Programmable Logic Controllers

V200 Series **432**

V100 Series **433**

Type 1 Light Series **434**

TOSHIBA TRAINING

Training Programs for Your Industrial Needs

Through classroom presentations, hands-on testing, and product demonstrations, our courses provide the knowledge and skills necessary to safely troubleshoot, repair, and commission our complete line of industrial solutions. We offer basic and advanced blended learning programs that can be customized to suit individual needs and applications.

Continuing Education

As an approved IACET Authorized provider, we have several courses that qualify for continuing education units (CEU). This distinction assures employers, credentialing associations, licensing bodies, and others that an attendee has completed a quality program that meets the national standard for continuing education and training.

To Enroll for Classes:

Visit our learning portal at https://toshiba.myabsorb.com/#/catalog.

*For training on any equipment not listed, contact Field Service Training for availability.

Available Classes

Drives

AS3 Basic Motors & Drives
IACET hours/CEU: 1.8
This class is free for all.

AS3 Troubleshooting and Repair for Authorized Service Providers
IACET hours/CEU: 1.8
Net Cost $ 2000

G9/H9/P9/Q9/AS1 Troubleshooting and Repair for Authorized Service Providers
Course Completion Certificate
Net Cost $ 2000

GX7M Troubleshooting and Repair for Authorized Service Providers
Course Completion Certificate
Net Cost $ 2000

HVAC Applications and Commissioning
IACET hours/CEU: 1.8
No charge.

HX7+C, D, Troubleshooting and Repair for Authorized Service Providers
Course Completion Certificate
Net Cost $2000

W7/HX7 Troubleshooting and Repair for Authorized Service Providers
Course Completion Certificate
Net Cost $ 2000

T300 – 3 Day End User
Course Completion Certificate
Net Cost $3000

T300 End User Plus
Net Cost: $4,000

T300 First Responder for Authorized Service Providers
Course Completion Certificate
Net Cost: $4,000

Medium Voltage Custom Adjustable Speed Drives Product Applications
Net Cost: $1,500
On-site Net Cost: $4,000

Medium Voltage Custom Adjustable Speed Drives Sales Application
Net Cost: $4,000

Available Classes (contd.)

Power Apparatus & Controls

JKSSS Troubleshooting and Repair (MV only)
Course Completion Certificate
Net Cost $3,000

Solid State Starter Troubleshooting and Repair (LV and MV)
IACET hours/CEU: 1.8
Net Cost: $3,000

TE Soft Starter Applications
Course Completion Certificate
Net Cost: $1,000

Motors

Motor Class
Course Completion Certificate
No Charge.

101 - Basic Motor Training
IACET hours/CEU: 0.5
Net Cost: $500

201 - Intermediate Motor Training
IACET hours/CEU: 1.7
Net Cost: $1,000

3D Product Models

Toshiba provides interactive 3D digital product model downloads.
Applicable fees apply for product models not offered online at www.toshiba.com/tic.

Contact Toshiba for full details.

Product	Net Price
Low Voltage Drive	$5,000
Medium Voltage Drive (Base Models)	$3,870
Medium Voltage Drive (Base Models with Bypass Option)	$5,670
Low Voltage Motor	$1,600
Medium Voltage Motor	$1,600
Power Apparatus & Components (TE-2 Chassis)	$1,600
Power Apparatus & Components (TE-B & TE-H)	$2,500
Power Apparatus & Components (HCV-6KAU)	$5,000
Power Apparatus & Components (HCV-7HA)	$5,000

Toshiba Motors

ONE STOP FOR ALL YOUR MOTOR NEEDS

Toshiba is a leading manufacturer of low voltage motors from ½ to 1,000 HP and 230 to 575 V and medium voltage motors from 100 to 50,000 HP and 2,300 to 13,800 V. Our extensive motor product offering and large installed base in numerous industries demonstrates our customers' confidence in choosing Toshiba motors. Since many of our products are manufactured under one roof, we can offer customized solutions to meet your application needs. We also have the capability to test our products together, as a complete system, before it goes out into the field—ensuring the highest level of quality, performance, and reliability.

General Purpose Motors

Open Drip-Proof Motors

Toshiba's general purpose, open drip-proof motors are designed to meet the industry's ever-increasing need for improved energy conservation and product reliability. These motors offer some of the highest efficiency and torque ratings while producing some of the lowest vibration ratings in the industry—leading to a longer life and greater reliability. Recommended for indoor use, our general purpose, open drip-proof motors are available in High and NEMA Premium® Efficiency.

Standard Features:

- Open Drip-Proof
- High & NEMA Premium® Efficiency
- 60 Hz: 230/460, 460, or 575 V
- Three-Phase
- 60 Hz Design
- 1.15 Service Factor
- NEMA Design B (Where Applicable)
- Class F Insulation; Inverter Duty, Exceeds NEMA MG1 Part 31
- IP22 Protection
- Stamped Steel Conduit Box
- Cast Iron Frame & Bearing Brackets
- Ball Bearing 143T through 405T Frames
- Roller Bearing on 444T Frame & Above, 4- & 6-Pole (Where Noted)
- Polyurea Base Grease
- See Appendix C for ASD Capabilities

Applications:

- Pumps
- Fans
- Compressors
- Conveyors
- Material Handling
- General Applications

Open Drip-Proof

High & NEMA Premium® Efficiency

CC027B

CC020A

3 THREE YEAR WARRANTY

NEMA Premium

2 TWO YEAR WARRANTY

High Efficiency

Toshiba's general purpose, open drip-proof motor series is designed to meet the industry's ever-increasing need for improved energy conservation and product reliability. This product line offers a high torque and low vibration design, leading to a longer life and greater reliability.

Product Scope:

Horsepower: 1 to 800 HP

Speed (60 Hz): 3600, 1800, or 1200 RPM

Volt (60 Hz): 230/460, 460, or 575 V

Enclosure: Open Drip-Proof

Frame Size: 143T through 5810UZ

Construction: Cast Iron Frame & Bearing Brackets

Insulation: Class F Inverter Duty, Exceeds NEMA MG1 Part 31

HP	Speed (RPM)	Volts	Frame	Weight (lbs.)	Model Number	FL Amps	Nominal FL EFF	Notes	Discount Symbol	List Price
1	1800	230/460	143T	45	0014DPSA31A-P	3.0/1.5	85.5	1	MCTDPP	$450
1	1800	575	143T	45	0014DPSC31A-P	1.2	85.5	1	MCTDPP	$450
1	1200	230/460	145T	51	0016DPSA31A-P	3.8/1.9	82.5	1	MCTDPP	$559
1	1200	575	145T	51	0016DPSC31A-P	1.5	82.5	1	MCTDPP	$559
1.5	3600	230/460	143T	44	Y152DPSA31A-P	4.2/2.1	84.0	1	MCTDPP	$490
1.5	3600	575	143T	44	Y152DPSC31A-P	1.7	84.0	1	MCTDPP	$490
1.5	1800	230/460	145T	41	Y154DPSA31A-P	4.4/2.2	86.5	1	MCTDPP	$495
1.5	1800	575	145T	41	Y154DPSC31A-P	1.8	86.5	1	MCTDPP	$495
1.5	1200	230/460	182T	93	Y156DPSA31A-P	5.2/2.6	86.5	1	MCTDPP	$597
1.5	1200	575	182T	93	Y156DPSC31A-P	2.1	86.5	1	MCTDPP	$597
2	3600	230/460	145T	49	0022DPSA31A-P	5.4/2.7	85.5	1	MCTDPP	$594
2	3600	575	145T	49	0022DPSC31A-P	2.2	85.5	1	MCTDPP	$594
2	1800	230/460	145T	53	0024DPSA31A-P	5.4/2.7	86.5	1	MCTDPP	$537
2	1800	575	145T	53	0024DPSC31A-P	2.2	86.5	1	MCTDPP	$537
2	1200	230/460	184T	106	0026DPSA31A-P	6.8/3.4	87.5	1	MCTDPP	$692
2	1200	575	184T	106	0026DPSC31A-P	2.7	87.5	1	MCTDPP	$692
3	3600	230/460	145T	54	0032DPSA31A-P	7.8/3.9	85.5	1	MCTDPP	$628
3	3600	575	145T	54	0032DPSC31A-P	3.1	85.5	1	MCTDPP	$628
3	1800	230/460	182T	90	0034DPSA31A-P	8.0/4.0	89.5	1	MCTDPP	$617
3	1800	575	182T	90	0034DPSC31A-P	3.2	89.5	1	MCTDPP	$617
3	1200	230/460	213T	139	0036DPSA31A-P	9.0/4.5	88.5	1	MCTDPP	$879
3	1200	575	213T	139	0036DPSC31A-P	3.9	88.5	1	MCTDPP	$879
5	3600	230/460	182T	89	0052DPSA31A-P	11.6/5.8	86.5	1	MCTDPP	$778
5	3600	575	182T	89	0052DPSC31A-P	4.6	86.5	1	MCTDPP	$778
5	1800	230/460	184T	101	0054DPSA31A-P	13.2/6.6	89.5	1	MCTDPP	$704
5	1800	575	184T	101	0054DPSC31A-P	5.3	89.5	1	MCTDPP	$704
5	1200	230/460	215T	168	0056DPSA31A-P	14.4/7.2	89.5	1	MCTDPP	$1,292
5	1200	575	215T	168	0056DPSC31A-P	5.8	89.5	1	MCTDPP	$1,292

Open Drip-Proof

High & NEMA Premium® Efficiency

HP	Speed (RPM)	Volts	Frame	Weight (lbs.)	Model Number	FL Amps	Nominal FL EFF	Notes	Discount Symbol	List Price
7.5	3600	230/460	184T	104	Y752DPSA31A-P	18.0/9.0	88.5	1	MCTDPP	$1,008
7.5	3600	575	184T	104	Y752DPSC31A-P	7.2	88.5	1	MCTDPP	$1,008
7.5	1800	230/460	213T	146	Y754DPSA31A-P	18.8/9.4	91.0	1	MCTDPP	$1,008
7.5	1800	575	213T	146	Y754DPSC31A-P	7.5	91.0	1	MCTDPP	$1,008
7.5	1200	230/460	254T	234	Y756DPSA31A-P	20.4/10.2	90.2	1	MCTDPP	$1,680
7.5	1200	575	254T	234	Y756DPSC31A-P	8.2	90.2	1	MCTDPP	$1,680
10	3600	230/460	213T	150	0102DPSA31A-P	24.8/12.4	89.5	1	MCTDPP	$1,209
10	3600	575	213T	150	0102DPSC31A-P	9.9	89.5	1	MCTDPP	$1,209
10	1800	230/460	215T	165	0104DPSA31A-P	24.4/12.2	91.7	1	MCTDPP	$1,226
10	1800	575	215T	165	0104DPSC31A-P	9.8	91.7	1	MCTDPP	$1,226
10	1200	230/460	256T	265	0106DPSA31A-P	26.6/13.3	91.7	1	MCTDPP	$2,052
10	1200	575	256T	265	0106DPSC31A-P	10.6	91.7	1	MCTDPP	$2,052
15	3600	230/460	215T	183	0152DPSA31A-P	36.8/18.4	90.2	1	MCTDPP	$1,663
15	3600	575	215T	183	0152DPSC31A-P	14.7	90.2	1	MCTDPP	$1,663
15	1800	230/460	254T	254	0154DPSA31A-P	38.2/19.1	93.0	1	MCTDPP	$1,621
15	1800	575	254T	254	0154DPSC31A-P	15.2	93.0	1	MCTDPP	$1,621
15	1200	230/460	284T	348	0156DPSA31A-P	40/20	91.7	1	MCTDPP	$2,878
15	1200	575	284T	348	0156DPSC31A-P	16.0	91.7	1	MCTDPP	$2,878
20	3600	230/460	254T	267	0202DPSA31A-P	47.2/23.6	91.0	1	MCTDPP	$2,109
20	3600	575	254T	267	0202DPSC31A-P	18.9	91.0	1	MCTDPP	$2,109
20	1800	230/460	256T	300	0204DPSA31A-P	50/25	93.0	1	MCTDPP	$2,002
20	1800	575	256T	300	0204DPSC31A-P	20	93.0	1	MCTDPP	$2,002
20	1200	230/460	286T	373	0206DPSA31A-P	51.6/25.8	92.4	1	MCTDPP	$3,371
20	1200	575	286T	373	0206DPSC31A-P	20.6	92.4	1	MCTDPP	$3,371
25	3600	230/460	256T	300	0252DPSA31A-P	58/29	91.7	1	MCTDPP	$2,589
25	3600	575	256T	300	0252DPSC31A-P	23.2	91.7	1	MCTDPP	$2,589
25	1800	230/460	284T	370	0254DPSA31A-P	64/32	93.6	1	MCTDPP	$2,428
25	1800	575	284T	370	0254DPSC31A-P	25.6	93.6	1	MCTDPP	$2,428
25	1200	230/460	324T	511	0256DPSA31A-P	67/33.5	93.0	1	MCTDPP	$3,445
25	1200	575	324T	511	0256DPSC31A-P	26.8	93.0	1	MCTDPP	$3,445
30	3600	230/460	284TS	377	0302DPSA31B-P	70.8/35.4	91.7	1	MCTDPP	$2,974
30	3600	575	284TS	377	0302DPSC31B-P	28.3	91.7	1	MCTDPP	$2,974
30	1800	230/460	286T	434	0304DPSA31A-P	72.4/36.2	94.1	1	MCTDPP	$2,919
30	1800	575	286T	434	0304DPSC31A-P	29	94.1	1	MCTDPP	$2,919
30	1200	230/460	326T	586	0306DPSA31A-P	80/40	93.6	1	MCTDPP	$4,206
30	1200	575	326T	586	0306DPSC31A-P	32	93.6	1	MCTDPP	$4,206
40	3600	230/460	286TS	406	0402DPSA31B-P	93/46.5	92.4	1	MCTDPP	$3,746
40	3600	575	286TS	406	0402DPSC31B-P	37.2	92.4	1	MCTDPP	$3,746
40	1800	230/460	324T	549	0404DPSA31A-P	97/48.5	94.1	1	MCTDPP	$3,178
40	1800	575	324T	549	0404DPSC31A-P	43.7	94.1	1	MCTDPP	$3,178
40	1200	230/460	364T	679	0406DPSA31A-P	98.4/49.2	94.1	1	MCTDPP	$5,502
40	1200	575	364T	679	0406DPSC31A-P	39.4	94.1	1	MCTDPP	$5,502
50	3600	230/460	324TS	570	0502DPSA31B-P	118/59	93.0	1	MCTDPP	$4,374
50	3600	575	324TS	570	0502DPSC31B-P	47.2	93.0	1	MCTDPP	$4,374
50	1800	230/460	326T	606	0504DPSA31A-P	118/59	94.5	1	MCTDPP	$3,876
50	1800	575	326T	606	0504DPSC31A-P	47.2	94.5	1	MCTDPP	$3,876
50	1200	230/460	365T	743	0506DPSA31A-P	123/61.5	94.1	1	MCTDPP	$6,423
50	1200	575	365T	743	0506DPSC31A-P	49.2	94.1	1	MCTDPP	$6,423

Open Drip-Proof

High & NEMA Premium® Efficiency

HP	Speed (RPM)	Volts	Frame	Weight (lbs.)	Model Number	FL Amps	Nominal FL EFF	Notes	Discount Symbol	List Price
60	3600	230/460	326TS	650	0602DPSA31B-P	136/68	93.6	1	MCTDPP	$5,390
60	3600	575	326TS	650	0602DPSC31B-P	54.4	93.6	1	MCTDPP	$5,390
60	1800	230/460	364T	723	0604DPSA31A-P	144/72	95.0	1	MCTDPP	$5,462
60	1800	575	364T	723	0604DPSC31A-P	57.6	95.0	1	MCTDPP	$5,462
60	1200	230/460	404T	944	0606DPSA31A-P	148/74	94.5	1	MCTDPP	$7,304
60	1200	575	404T	944	0606DPSC31A-P	59.2	94.5	1	MCTDPP	$7,304
60	1200	230/460	404T	1117	B0606VLF3USH	146/73	94.9		MXTDPP	$12,418
60	1200	575	404T	1032	B0606VLF3OSH	59.1	94.9		MXTDPP	$12,418
75	3600	230/460	364TS	699	0752DPSA31B-P	179/89.5	93.6	1	MCTDPP	$6,787
75	3600	575	364TS	699	0752DPSC31B-P	71.6	93.6	1	MCTDPP	$6,787
75	1800	230/460	365T	794	0754DPSA31A-P	176/88	95.0	1	MCTDPP	$7,037
75	1800	575	365T	794	0754DPSC31A-P	70.4	95.0	1	MCTDPP	$7,037
75	1200	230/460	405T	1144	0756DPSA31A-P	184/92	94.5	1	MCTDPP	$9,130
75	1200	575	405T	1221	0756DPSC31A-P	73.6	94.5	1	MCTDPP	$9,130
75	1200	230/460	405T	1221	B0756VLF3USH	180/90	95.7		MXTDPP	$14,470
75	1200	575	405T	1139	B0756VLF3OSH	72.4	95.7		MXTDPP	$14,470
100	3600	230/460	365TS	770	1002DPSA31B-P	226/113	93.6	1	MCTDPP	$7,078
100	3600	575	365TS	770	1002DPSC31B-P	91	93.6	1	MCTDPP	$7,078
100	1800	230/460	404T	1025	1004DPSA31A-P	230/115	95.4	1	MCTDPP	$8,740
100	1800	575	404T	1010	1004DPSC31A-P	92	95.4	1	MCTDPP	$8,740
100	1800	230/460	404T	1135	B1004VLF3USH	224/112	95.4		MXTDPP	$11,699
100	1800	575	404T	1100	B1004VLF3OSH	90.2	95.4		MXTDPP	$11,699
100	1200	230/460	444T	1364	1006DPSA31A-P	240/120	95.0	1	MCTDPP	$11,988
100	1200	575	444T	1364	1006DPSC31A-P	96	95.0	1	MCTDPP	$11,988
100	1200	230/460	444T	1480	B1006VLF4USH	242/121	95.5	2	MXTDPP	$19,243
100	1200	575	444T	1406	B1006VLF4OSH	96.7	95.5	2	MXTDPP	$19,243
125	3600	230/460	404TS	1010	1252DPSA31B-P	284/142	94.1	1	MCTDPP	$9,915
125	3600	575	404TS	1010	1252DPSC31B-P	114	94.1	1	MCTDPP	$9,915
125	3600	230/460	404TS	1114	B1252VLG3USH	284/142	95.4		MXTDPP	$15,262
125	3600	575	404TS	1114	B1252VLG3OSH	112	95.4		MXTDPP	$15,262
125	1800	230/460	405T	1203	1254DPSA31A-P	287/143.5	95.4	1	MCTDPP	$9,622
125	1800	575	405T	1203	1254DPSC31A-P	115	95.4	1	MCTDPP	$9,622
125	1800	230/460	405T	1209	B1254VLF3USH	278/139	95.5		MXTDPP	$13,195
125	1800	575	405T	1209	B1254VLF3OSH	112	95.5		MXTDPP	$13,195
125	1200	230/460	445T	1647	1256DPSA31A-P	304/152	95.0	1	MCTDPP	$14,582
125	1200	575	445T	1647	1256DPSC31A-P	122	95.0	1	MCTDPP	$14,582
125	1200	230/460	445T	1507	B1256VLF4USH	306/153	95.3	2	MXTDPP	$21,855
125	1200	575	445T	1580	B1256VLF4OSH	122	95.3	2	MXTDPP	$21,855
150	3600	230/460	405TS	1126	1502DPSA31B-P	338/169	94.1	1	MCTDPP	$10,767
150	3600	575	405TS	1126	1502DPSC31B-P	136	94.1	1	MCTDPP	$10,767
150	3600	230/460	405TS	1213	B1502VLG3USH	328/164	95.9		MXTDPP	$18,565
150	3600	575	405TS	1213	B1502VLG3OSH	132	95.9		MXTDPP	$18,565
150	1800	230/460	444T	1452	1504DPSA31A-P	346/173	95.8	1	MCTDPP	$12,854
150	1800	575	444T	1452	1504DPSC31A-P	139	95.8	1	MCTDPP	$12,854
150	1800	230/460	444T	1471	B1504VLF4USH	334/167	95.8	2	MXTDPP	$19,054
150	1800	575	444T	1355	B1504VLF4OSH	133	95.8	2	MXTDPP	$19,054
150	1200	230/460	447T	1938	1506DPSA31A-P	358/179	95.4	1	MCTDPP	$17,222
150	1200	575	447T	1938	1506DPSC31A-P	143	95.4	1	MCTDPP	$17,222

Open Drip-Proof

High & NEMA Premium® Efficiency

HP	Speed (RPM)	Volts	Frame	Weight (lbs.)	Model Number	FL Amps	Nominal FL EFF	Notes	Discount Symbol	List Price
150	1200	460	445TZ	1617	B1506VLF4BSH	180	95.7	2	MXTDPP	$24,228
150	1200	575	445TZ	1617	B1506VLF4OSH	143	95.7	2	MXTDPP	$24,228
200	3600	230/460	444TS	1524	B2002VLG3USH	450/225	95.7		MXTDPP	$28,879
200	3600	575	444TS	1520	B2002VLG3OSH	178	95.7		MXTDPP	$28,879
200	1800	460	445T	1606	2004DPSB31A-P	228	95.8	1	MCTDPP	$15,712
200	1800	575	445T	1606	2004DPSC31A-P	183	95.8	1	MCTDPP	$15,712
200	1800	230/460	445T	1586	B2004VLF4USH	442/221	96.2	2	MXTDPP	$22,976
200	1800	575	445T	1597	B2004VLF4OSH	176	96.2	2	MXTDPP	$22,976
200	1200	460	449T	1936	2006DPSB31A-P	240	95.4	1	MCTDPP	$20,257
200	1200	575	449T	1936	2006DPSC31A-P	192	95.4	1	MCTDPP	$20,257
200	1200	460	505UZ	2342	B2006VLF4BMH	233	96.0	2	MXTDPP	$37,362
200	1200	575	505UZ	2010	B2006VLF4OMH	186	96.0	2	MXTDPP	$37,362
200	1200	460	505US	2010	B2006VLG3BMH	233	96.0		MXTDPP	$33,894
200	1200	575	505US	2010	B2006VLG3OMH	186	96.0		MXTDPP	$33,894
250	3600	230/460	445TS	1676	B2502VLG3UMH	560/280	95.8	1	MXTDPP	$29,802
250	3600	575	445TS	1720	B2502VLG3OMH	224	95.8		MXTDPP	$29,802
250	1800	460	447T	1938	2504DPSB31A-P	278	95.8	1	MCTDPP	$18,306
250	1800	575	447T	1938	2504DPSC31A-P	222	95.8	1	MCTDPP	$18,306
250	1800	460	447T	1721	B2504VLF4BMH	271	96.4	2	MXTDPP	$30,715
250	1800	460	447TS	1721	B2504VLG3BMH	271	96.4		MXTDPP	$30,715
250	1800	575	447T	1721	B2504VLF4OMH	217	96.4	2	MXTDPP	$30,715
250	1800	575	447TS	1721	B2504VLG3OMH	217	96.4		MXTDPP	$30,715
250	1200	460	505UZ	2450	B2506VLF4BMH	287	95.9	2	MXTDPP	$39,068
250	1200	460	505US	2072	B2506VLG3BMH	287	95.9	1	MXTDPP	$35,600
250	1200	575	505UZ	2072	B2506VLF4OMH	230	95.9	2	MXTDPP	$39,068
250	1200	575	505US	2072	B2506VLG3OMH	230	95.9		MXTDPP	$35,600
300	3600	460	447TS	1861	B3002VLG3BMH	325	96.1		MXTDPP	$38,793
300	3600	575	447TS	1857	B3002VLG3OMH	260	96.1		MXTDPP	$38,793
300	1800	460	449T	2300	3004DPSB31A-P	330	95.8	1	MCTDPP	$23,783
300	1800	575	449T	2300	3004DPSC31A-P	264	95.8	1	MCTDPP	$23,783
300	1800	460	447T	1898	B3004VLF4BMH	328	96.2	2	MXTDPP	$32,234
300	1800	460	447TS	1927	B3004VLG3BMH	328	96.2		MXTDPP	$32,234
300	1800	575	447T	1721	B3004VLF4OMH	262	96.2	2	MXTDPP	$32,234
300	1800	575	447TS	1868	B3004VLG3OMH	262	96.2		MXTDPP	$32,234
300	1200	460	507UZ	2702	B3006VLF4BMH	344	95.9	2	MXTDPP	$46,961
300	1200	460	507US	2474	B3006VLG3BMH	344	95.9		MXTDPP	$43,493
300	1200	575	507UZ	2474	B3006VLF4OMH	278	95.8	2	MXTDPP	$46,961
300	1200	575	507US	2474	B3006VLG3OMH	278	95.8		MXTDPP	$43,493
350	3600	460	447TS	1966	B3502VLG3BMH	378	96.2		MXTDPP	$42,117
350	3600	575	447TS	2012	B3502VLG3OMH	302	96.2		MXTDPP	$42,117
350	1800	460	505UZ	2054	B3504VLF4BMH	383	96.5	2	MXTDPP	$41,012
350	1800	460	505US	2485	B3504VLG3BMH	383	96.5		MXTDPP	$37,544
350	1800	575	505UZ	2054	B3504VLF4OMH	306	96.5	2	MXTDPP	$41,012
350	1800	575	505US	2054	B3504VLG3OMH	306	96.5		MXTDPP	$37,544
400	3600	460	505USS	2341	B4002VLG3BMH	428	95.9		MXTDPP	$48,900
400	3600	575	505USS	2312	B4002VLG3OMH	342	96.0		MXTDPP	$48,900
400	1800	460	507UZ	2823	B4004VLF4BMH	435	96.5	2	MXTDPP	$50,808
400	1800	460	507US	2806	B4004VLG3BMH	435	96.5		MXTDPP	$47,340

Open Drip-Proof

High & NEMA Premium® Efficiency

HP	Speed (RPM)	Volts	Frame	Weight (lbs.)	Model Number	FL Amps	Nominal FL EFF	Notes	Discount Symbol	List Price
400	1800	575	507UZ	2620	B4004VLF4OMH	348	96.5	2	MXTDPP	$50,808
400	1800	575	507US	2620	B4004VLG3OMH	348	96.5		MXTDPP	$47,340
400	1200	460	509UZ	2950	F4006VLF4BM	460	95.4	2	MXTDPP	$50,793
400	1200	460	509US	2800	F4006VLG3BM	460	95.4		MXTDPP	$47,250
400	1200	575	509UZ	2950	F4006VLF4OM	368	95.4	2	MXTDPP	$50,793
400	1200	575	509US	2800	F4006VLG3OM	368	95.4		MXTDPP	$47,250
450	3600	460	507USS	2631	B4502VLG3BMH	476	96.2		MXTDPP	$52,842
450	3600	575	507USS	2777	B4502VLG3OMH	380	96.2		MXTDPP	$52,842
450	1800	460	507UZ	2777	B4504VLF4BMH	495	96.2	2	MXTDPP	$56,724
450	1800	575	507UZ	2777	B4504VLF4OMH	396	96.2	2	MXTDPP	$56,724
450	1800	460	507US	2777	B4504VLG3BMH	495	96.2		MXTDPP	$53,256
450	1800	575	507US	2777	B4504VLG3OMH	392	96.2		MXTDPP	$53,256
450	1800	575	509UZ	3200	B5004VLF4OMH	392	96.2	2	MXTDPP	$64,057
450	1200	460	509UZ	2850	F4506VLF4BM	523	95.4	2	MXTDPP	$56,700
450	1200	460	509US	2850	F4506VLG3BM	523	95.4		MXTDPP	$53,155
450	1200	460	509UZ	2850	F4506VLF4OM	521	95.4	2	MXTDPP	$56,700
450	1200	460	509US	2850	F4506VLG3OM	521	95.4		MXTDPP	$53,155
500	3600	460	507USS	2811	B5002VLG3BMH	526	96.5		MXTDPP	$58,700
500	3600	575	507USS	2777	B5002VLG3OMH	421	96.5		MXTDPP	$58,700
500	1800	460	509UZ	3200	B5004VLF4BMH	563	96.4	2	MXTDPP	$64,057
500	1800	575	509US	3200	B5004VLG3OMH	442	96.5		MXTDPP	$64,057
500	1800	460	509US	3150	B5004VLG3BMH	563	96.4		MXTDPP	$64,057
500	1200	460	5810UZ	4750	F5006VLF4BM	655	95.8	2	MXTDPP	$62,605
500	1200	460	5810US	4650	F5006VLG3BM	655	95.8		MXTDPP	$59,062
500	1200	575	5810UZ	4750	F5006VLF4OM	524	95.8	2	MXTDPP	$62,605
500	1200	575	5810US	4650	F5006VLG3OM	524	95.8		MXTDPP	$59,062
600	3600	460	507USS	2722	F6002VLG3BM	665	94.1		MXTDPP	$64,467
600	3600	575	507USS	2722	F6002VLG3OM	518	95.0		MXTDPP	$64,467
600	3600	460	507USS	2804	F6002VLG3BMH	630	96.2		MXTDPP	$67,752
600	3600	575	507USS	2777	F6002VLG3OMH	510	96.2		MXTDPP	$67,752
600	1800	460	509UZ	3250	F6004VLF4BM	648	95.4	2	MXTDPP	$58,669
600	1800	460	509US	3150	F6004VLG3BM	648	95.4		MXTDPP	$55,124
600	1800	575	509UZ	3250	F6004VLF4OM	518	95.4	2	MXTDPP	$58,669
600	1800	575	509US	3150	F6004VLG3OM	518	95.4		MXTDPP	$55,124
600	1200	460	5810UZ	4700	F6006VLF4BM	860	95.4	2	MXTDPP	$74,418
600	1200	460	5810US	4700	F6006VLG3BM	860	95.4		MXTDPP	$70,875
600	1200	575	5810UZ	4700	F6006VLF4OM	577	95.4	2	MXTDPP	$74,418
600	1200	575	5810US	4700	F6006VLG3OM	577	95.4		MXTDPP	$70,875
700	3600	460	509USS	3230	F7001VLG3BM	756	96.2	5	MXTDPP	$68,906
700	3600	460	509USS	3279	F7003VLG3BM	756	96.2	4	MXTDPP	$68,906
700	3600	575	509USS	3279	F7001VLG3OM	611	95.8	5	MXTDPP	$68,906
700	3600	575	509USS	3279	F7003VLG3OM	643	95.4	4	MXTDPP	$68,906
700	3600	460	507USS	2777	F7002VKG3BMH	757	95.8	3, 14	MXTDPP	$75,091
700	3600	575	507USS	2777	F7002VKG3OMH	592	95.8	3, 14	MXTDPP	$75,091
700	3600	460	507USS	2820	F7002VKG3BM	765	94.1	3, 14	MXTDPP	$68,906
700	3600	575	507USS	2890	F7002VKG3OM	643	95.4	3, 14	MXTDPP	$68,906
700	1800	460	5810UZ	4700	F7004VLF4BM	852	95.4	2	MXTDPP	$67,855
700	1800	575	5810US	4600	F7004VLG3OM	682	95.4		MXTDPP	$64,312

Open Drip-Proof

High & NEMA Premium® Efficiency

HP	Speed (RPM)	Volts	Frame	Weight (lbs.)	Model Number	FL Amps	Nominal FL EFF	Notes	Discount Symbol	List Price
700	1800	460	5810US	4600	F7004VLG3BM	852	95.4		MXTDPP	$64,312
700	1800	575	5810UZ	4700	F7004VLF4OM	682	95.4	2	MXTDPP	$67,855
700	1200	460	5810US	4750	F7006VKG3BM	991	95.8	3, 14	MXTDPP	$82,687
700	1200	460	5810UZ	4850	F7006VKF4BM	991	95.8	2, 3, 14	MXTDPP	$86,230
700	1200	575	5810US	4750	F7006VKG3OM	793	95.8	3, 14	MXTDPP	$82,687
700	1200	575	5810UZ	4850	F7006VKF4OM	793	95.8	2, 3, 14	MXTDPP	$86,230
800	3600	460	509USS	3385	F8001VLG3BM	880	96.2	5	MXTDPP	$78,749
800	3600	460	509USS	3373	F8003VLG3BM	880	96.2	4	MXTDPP	$78,749
800	3600	575	509USS	3385	F8001VLG3OM	706	95.8	5	MXTDPP	$78,749
800	3600	575	509USS	3385	F8003VLG3OM	706	95.8	4	MXTDPP	$78,749
800	1800	460	5810UZ	4750	F8004VLF4BM	968	95.4	2	MXTDPP	$77,043
800	1800	460	5810US	4650	F8004VLG3BM	969	95.4	4	MXTDPP	$73,499
800	1800	575	5810US	4650	F8004VLG3OM	775	95.4	4	MXTDPP	$73,499
800	1800	575	5810UZ	4750	F8004VLF4OM	830	95.8	2	MXTDPP	$77,043

FL Amps and FL EFF are average expected design values and not guaranteed.
The weights listed above are estimated.
Please contact Toshiba for information on product availability.
"CF" = Consult Factory

General Purpose TEFC

EQP Global® SD Motor Series

Toshiba's general purpose, totally enclosed fan cooled, NEMA Premium® efficiency, EQP Global® SD motor series is Toshiba's next-generation motor product line. This cutting-edge motor product line is designed to meet or exceed the competitive demands of the global market, as well as the amended integral horsepower (HP) rule IHMR 2016, while maintaining the high reliability and quality expected from Toshiba. Building on over 20 years of success with our EQPIII motor series, the EQP Global® SD features design enhancements on the rotor, frame, brackets, fan, and bearings.

Our EQP (efficiency, quality, and performance) philosophy extends beyond great products. We provide solutions and Global Supply Chain Management Systems (GSCMS) to meet the evolving needs of our global customers.

Standard Features:

- Totally Enclosed Fan Cooled
- Severe Duty
- NEMA Premium® Efficiency
- 60 Hz: 230/460, 460, or 575 V
- 50 Hz: 190/380 or 380 V
- Three-Phase
- Dual Frequency 50/ 60 Hz Design
- 1.15 Service Factor
- Footed, C-Face Footed, C-Face Footless, & Top Mount Design
- NEMA Design B
- Class F Insulation; Inverter Duty, Exceeds NEMA MG1 Part 31
- IP55 Protection
- Cast Iron Frame, Bearing Brackets & Conduit Box
- Multi-Mount Capabilities on Most Frames (See Appendix B)
- Multiple Drain Provisions for Horizontal & Vertical Mounting
- Oversized 300 Series Bearings
- 100% No-Load Commercial Test per IEEE 112 on All Motors
- 4142 High Strength Shaft Steel on all 440 Frames and Larger Roller Bearing Motors
- See Appendix C for ASD and Division 2 Capabilities

Applications:

- Pumps
- Fans
- Compressors
- Conveyors
- Mixers
- Material Handling

Totally Enclosed Fan Cooled

EQP Global® SD

NEMA Premium® Efficiency

CC027B

3 THREE YEAR WARRANTY

NEMA Premium

Toshiba's general purpose, totally enclosed fan cooled, NEMA Premium® efficiency, EQP Global® SD motor series is Toshiba's next-generation motor product line. This cutting-edge motor product line is designed to meet or exceed the competitive demands of the global market, as well as the amended integral horsepower (HP) rule IHMR 2016, while maintaining the high reliability and quality expected from Toshiba.

Designed for severe duty applications and built on over 20 years of success with our EQPIII motor series, the EQP Global® SD features multiple new design enhancements that make it one of the lowest cost-of-ownership products in the industry.

Product Scope:

Horsepower: 0.5 to 1,000 HP

Speed (60 Hz): 3600, 1800, 1200, or 900 RPM
(50 Hz): 3000, 1500, 1000, or 750 RPM

Volt (60 Hz): 230/460, 460 or 575 V
(50 Hz): 190/380 or 380 V, 143T Through S447T

Enclosure: Totally Enclosed Fan Cooled

Frame Size*: 56 through 6811

Construction: Cast Iron Frame, Bearing Brackets & Conduit Box

Insulation: Class F Inverter Duty, Exceeds NEMA MG1 Part 31
(Voltage Withstand Capability of 2000 V in 0.1 µs)

* Production modifications not applicable to EQP Global® Motors 140 through 440 Frames (use EQPIII Series base price for these frame sizes).

HP	Speed (RPM)	Volts	Frame	Weight (lbs.)	Model Number	FL Amps	Nominal FL EFF	Notes	Discount Symbol	List Price
0.5	1800	230/460	56/56H	53	1/24FNSR31H-P	1.4/0.7	84	1, 9, 18	MTPFCP	$511
0.5	1800	575	56/56H	53	1/24FNSC31H-P	0.6	84	1,18	MTPFCP	$511
0.5	1200	230/460	56/56H	52	1/26SDSR31H-P	1.8/0.9	81.5	1, 9, 18	MTPFCP	$545
0.5	1200	575	56/56H	52	1/26SDSC31H-P	0.7	81.5	1, 18	MTPFCP	$545
0.75	3600	230/460	56/56H	48	3/42SDSR31H-P	2.2/1.1	77	1, 9, 18	MTPFCP	$492
0.75	3600	575	56/56H	48	3/42SDSC31H-P	0.9	77	1, 18	MTPFCP	$492
0.75	1800	230/460	56/56H	53	3/44SDSR31H-P	2.4/1.2	85.8	1, 9, 18	MTPFCP	$539
0.75	1800	575	56/56H	53	3/44SDSC31H-P	0.9	85.8	1, 18	MTPFCP	$539
0.75	1200	230/460	56/56H	52	3/46SDSR31H-P	2.6/1.3	82.8	1, 9, 18	MTPFCP	$547
0.75	1200	575	56/56H	52	3/46SDSC31H-P	1.1	82.8	1, 18	MTPFCP	$547
0.75	1200	230/460	143T	60	3/46SDSR41A-P	2.8/1.4	80.0	1, 9, 18	MTPFCP	$548
0.75	1200	575	143T	60	3/46SDSC41A-P	1.1	81.5	1, 18	MTPFCP	$548
0.75	900	575	145T	62	3/48SDSC41A-P	1.3	74.7	1, 18	MTPFCP	$986
0.75	900	230/460	145T	62	3/48SDSR41A-P	3.2/1.6	74	1, 9, 18	MTPFCP	$986
1	3600	230/460	56/56H	48	0012SDSR41H-P	2.8/1.4	77	1, 9, 18	MTPFCP	$586
1	3600	575	56/56H	48	0012SDSC41H-P	1.1	77	1,18	MTPFCP	$586
1	1800	230/460	56/56H	53	0014SDSR41H-P	3.2/1.6	85.5	1, 9, 18	MTPFCP	$622
1	1800	575	56/56H	53	0014SDSC41H-P	1.3	85.5	1,18	MTPFCP	$622
1	1800	230/460	143T	58	0014SDSR41A-P	3.4/1.7	85.5	1, 9, 18	MTPFCP	$464
1	1800	575	143T	57	0014SDSC41A-P	1.2	85.6	1, 18	MTPFCP	$464
1	1200	230/460	56/56H	56	0016SDSR41H-P	3.4/1.7	82.5	1, 9, 18	MTPFCP	$683
1	1200	575	56/56H	56	0016SDSC41H-P	1.3	82.5	1,18	MTPFCP	$683

Totally Enclosed Fan Cooled

EQP Global® SD

NEMA Premium® Efficiency

EQP Global® SD

HP	Speed (RPM)	Volts	Frame	Weight (lbs.)	Model Number	FL Amps	Nominal FL EFF	Notes	Discount Symbol	List Price
1	1200	230/460	145T	62	0016SDSR41A-P	3.6/1.8	82.9	1, 9, 18	MTPFCP	$576
1	1200	575	145T	62	0016SDSC41A-P	1.5	82.9	1, 18	MTPFCP	$576
1	900	575	182T	99	0018SDSC41A-P	1.4	75.5	1, 18	MTPFCP	$1,016
1	900	230/460	182T	99	0018SDSR41A-P	3.4/1.7	75.5	1, 9, 18	MTPFCP	$1,016
1.5	3600	230/460	56/56H	50	Y152SDSR41H-P	4.0/2.0	84	1, 9, 18	MTPFCP	$648
1.5	3600	575	56/56H	50	Y152SDSC41H-P	1.6	84	1,18	MTPFCP	$648
1.5	3600	230/460	143T	57	Y152SDSR41A-P	4.0/2.0	84.3	1, 9, 18	MTPFCP	$505
1.5	3600	575	143T	57	Y152SDSC41A-P	1.6	84.3	1, 18	MTPFCP	$505
1.5	1800	230/460	56/56H	55	Y154SDSR41H-P	4.4/2.2	86.5	1, 9, 18	MTPFCP	$652
1.5	1800	575	56/56H	55	Y154SDSC41H-P	1.8	86.5	1,18	MTPFCP	$652
1.5	1800	230/460	145T	60	Y154SDSR41A-P	4.8/2.4	86.5	1, 9, 18	MTPFCP	$510
1.5	1800	575	145T	59	Y154SDSC41A-P	1.9	86.5	1, 18	MTPFCP	$510
1.5	1200	230/460	56/56H	77	Y156SDSR41H-P	5.4/2.7	87.5	1, 9, 18	MTPFCP	$948
1.5	1200	575	56/56H	77	Y156SDSC41H-P	2.2	87.5	1,18	MTPFCP	$948
1.5	1200	230/460	182T	99	Y156SDSR41A-P	5.0/2.5	87.7	1, 9, 18	MTPFCP	$615
1.5	1200	575	182T	99	Y156SDSC41A-P	2.0	87.5	1, 18	MTPFCP	$615
1.5	900	575	184T	110	Y158SDSC41A-P	2.1	78.5	1, 18	MTPFCP	$1,169
1.5	900	230/460	184T	110	Y158SDSR41A-P	5.2/2.6	78.5	1, 9, 18	MTPFCP	$1,169
2	3600	230/460	145T	60	0022SDSR41A-P	5.2/2.6	85.6	1, 9, 18	MTPFCP	$612
2	3600	575	145T	60	0022SDSC41A-P	2.1	85.5	1, 18	MTPFCP	$612
2	3600	230/460	56/56H	53	0022SDSR41H-P	5.2/2.6	85.5	1, 9, 18	MTPFCP	$673
2	3600	575	56/56H	53	0022SDSC41H-P	2.1	85.5	1,18	MTPFCP	$673
2	1800	230/460	56/56H	58	0024SDSR41H-P	6.0/3.0	86.5	1, 9, 18	MTPFCP	$659
2	1800	575	56/56H	58	0024SDSC41H-P	2.4	86.5	1,18	MTPFCP	$659
2	1800	230/460	145T	62	0024SDSR41A-P	6.0/3.0	86.5	1, 9, 18	MTPFCP	$554
2	1800	575	145T	62	0024SDSC41A-P	2.4	86.5	1, 18	MTPFCP	$554
2	1200	230/460	184T	110	0026SDSR41A-P	6.8/3.4	88.5	1, 9, 18	MTPFCP	$713
2	1200	575	184T	110	0026SDSC41A-P	2.7	88.5	1, 18	MTPFCP	$713
2	900	575	213T	163	0028SDSC41A-P	2.4	84	1, 18	MTPFCP	$1,535
2	900	230/460	213T	163	0028SDSR41A-P	6.5/3.5	84	1, 9, 18	MTPFCP	$1,535
3	3600	230/460	182T	88	0032SDSR41A-P	7.4/3.7	86.7	1, 9, 18	MTPFCP	$647
3	3600	575	182T	84	0032SDSC41A-P	3.0	86.7	1, 18	MTPFCP	$647
3	1800	230/460	182T	99	0034SDSR41A-P	8.0/4.0	89.5	1, 9, 18	MTPFCP	$636
3	1800	575	182T	99	0034SDSC41A-P	3.2	89.5	1, 18	MTPFCP	$636
3	1200	230/460	213T	163	0036SDSR41A-P	8.8/4.4	89.6	1, 9, 18	MTPFCP	$906
3	1200	575	213T	168	0036SDSC41A-P	3.5	89.8	1, 18	MTPFCP	$906
3	900	575	215T	176	0038SDSC41A-P	3.7	85.5	1, 18	MTPFCP	$1,931
3	900	230/460	215T	176	0038SDSR41A-P	9.4/4.7	85.5	1, 9, 18	MTPFCP	$1,931
5	3600	230/460	184T	99	0052SDSR41A-P	11.6/5.8	88.7	1, 9, 18	MTPFCP	$802
5	3600	575	184T	101	0052SDSC41A-P	4.6	88.7	1, 18	MTPFCP	$802
5	1800	230/460	184T	110	0054SDSR41A-P	13.8/6.9	89.5	1, 9, 18	MTPFCP	$726
5	1800	575	184T	110	0054SDSC41A-P	5.2	89.5	1, 18	MTPFCP	$726
5	1200	230/460	215T	176	0056SDSR41A-P	13.8/6.9	89.6	1, 9, 18	MTPFCP	$1,332
5	1200	575	215T	179	0056SDSC41A-P	5.5	89.6	1, 18	MTPFCP	$1,332
5	900	575	254T	274	0058SDSC41A-P	6.0	86.5	1, 18	MTPFCP	$2,840
5	900	230/460	254T	274	0058SDSR41A-P	14.8/7.4	86.5	1, 9, 18	MTPFCP	$2,840
7.5	3600	230/460	213T	168	Y752SDSR41A-P	18.0/9.0	89.7	1, 9, 18	MTPFCP	$1,039
7.5	3600	575	213T	172	Y752SDSC41A-P	7.2	89.7	1, 18	MTPFCP	$1,039

Totally Enclosed Fan Cooled

EQP Global® SD

NEMA Premium® Efficiency

HP	Speed (RPM)	Volts	Frame	Weight (lbs.)	Model Number	FL Amps	Nominal FL EFF	Notes	Discount Symbol	List Price
7.5	1800	230/460	213T	186	Y754SDSR41A-P	19.6/9.8	91.8	1, 9, 18	MTPFCP	$1,039
7.5	1800	575	213T	179	Y754SDSC41A-P	7.8	91.8	1, 18	MTPFCP	$1,039
7.5	1200	230/460	254T	281	Y756SDSR41A-P	20.4/10.2	91.2	1, 9, 18	MTPFCP	$1,768
7.5	1200	575	254T	274	Y756SDSC41A-P	8.2	91.1	1, 18	MTPFCP	$1,768
7.5	900	575	256T	292	Y758SDSC41A-P	9.0	86.5	1, 18	MTPFCP	$3,218
7.5	900	230/460	256T	292	Y758SDSR41A-P	22.6/11.3	86.5	1, 9, 18	MTPFCP	$3,218
10	3600	230/460	215T	183	0102SDSR41A-P	23.6/11.8	90.2	1, 9, 18	MTPFCP	$1,246
10	3600	575	215T	183	0102SDSC41A-P	9.4	91.7	1, 18	MTPFCP	$1,246
10	1800	230/460	215T	203	0104SDSR41A-P	26/13	91.8	1, 9, 18	MTPFCP	$1,264
10	1800	575	215T	203	0104SDSC41A-P	10.4	91.8	1, 18	MTPFCP	$1,264
10	1200	230/460	256T	292	0106SDSR41A-P	26.8/13.4	91.3	1, 9, 18	MTPFCP	$2,160
10	1200	575	256T	293	0106SDSC41A-P	10.8	91.2	1, 18	MTPFCP	$2,160
10	900	575	284T	443	0108SDSC41A-P	11.6	89.5	1, 18	MTPFCP	$4,184
10	900	230/460	284T	443	0108SDSR41A-P	29/14.5	89.5	1, 9, 18	MTPFCP	$4,184
15	3600	230/460	254T	295	0152SDSR41A-P	36/18	91.2	1, 9, 18	MTPFCP	$1,714
15	3600	575	254T	302	0152SDSC41A-P	14.4	91.4	1, 18	MTPFCP	$1,714
15	1800	230/460	254T	315	0154SDSR41A-P	38/19	92.6	1, 9, 18	MTPFCP	$1,706
15	1800	575	254T	317	0154SDSC41A-P	15.2	92.6	1, 18	MTPFCP	$1,706
15	1200	230/460	284T	443	0156SDSR41A-P	40/20	91.9	1, 9, 18	MTPFCP	$3,029
15	1200	575	284T	441	0156SDSC41A-P	15.8	91.8	1, 18	MTPFCP	$3,029
15	900	575	286T	478	0158SDSC41A-P	18.5	CF	1, 18	MTPFCP	$5,082
15	900	230/460	286T	478	0158SDSR41A-P	43/22	89.5	1, 9, 18	MTPFCP	$5,082
20	3600	230/460	256T	311	0202SDSR41A-P	48/24	91.3	1, 9, 18	MTPFCP	$2,220
20	3600	575	256T	311	0202SDSC41A-P	19.2	91.3	1, 18	MTPFCP	$2,220
20	1800	230/460	256T	355	0204SDSR41A-P	50/25	93.3	1, 9, 18	MTPFCP	$2,107
20	1800	575	256T	353	0204SDSC41A-P	20	93.2	1, 18	MTPFCP	$2,107
20	1200	230/460	286T	478	0206SDSR41A-P	50/25	91.8	1, 9, 18	MTPFCP	$3,548
20	1200	575	286T	478	0206SDSC41A-P	20	91.9	1, 18	MTPFCP	$3,548
20	900	575	324T	620	0208SDSC41A-P	22	90.2	1, 18	MTPFCP	$6,068
20	900	230/460	324T	620	0208SDSR41A-P	56/28	90.2	1, 9, 18	MTPFCP	$6,068
25	3600	230/460	284TS	485	0252SDSR41B-P	58/29	91.8	1, 9, 18	MTPFCP	$2,725
25	3600	575	284TS	485	0252SDSC41B-P	23	91.8	1, 18	MTPFCP	$2,725
25	1800	230/460	284T	492	0254SDSR41A-P	62/31	93.8	1, 9, 18	MTPFCP	$2,556
25	1800	230/460	284TS	492	0254SDSR41B-P	62/31	93.8	1, 9, 18	MTPFCP	$2,556
25	1800	575	284T	496	0254SDSC41A-P	24	93.6	1, 18	MTPFCP	$2,556
25	1200	230/460	324T	627	0256SDSR41A-P	62/31	93.3	1, 9, 18	MTPFCP	$4,306
25	1200	575	324T	615	0256SDSC41A-P	25	93.3	1, 18	MTPFCP	$4,306
25	900	575	326T	633	0258SDSC41A-P	27	90.2	1, 18	MTPFCP	$7,068
25	900	230/460	326T	633	0258SDSR41A-P	69/35	90.2	1, 9, 18	MTPFCP	$7,068
30	3600	230/460	286TS	497	0302SDSR41B-P	70/35	91.9	1, 9, 18	MTPFCP	$3,131
30	3600	575	286TS	496	0302SDSC41B-P	28	91.9	1, 18	MTPFCP	$3,131
30	1800	230/460	286T	531	0304SDSR41A-P	72/36	93.8	1, 9, 18	MTPFCP	$3,073
30	1800	230/460	286TS	505	0304SDSR41B-P	72/36	93.8	1, 9, 18	MTPFCP	$3,073
30	1800	575	286T	518	0304SDSC41A-P	29	93.8	1, 18	MTPFCP	$3,073
30	1200	230/460	326T	638	0306SDSR41A-P	74/37	93.3	1, 9, 18	MTPFCP	$5,257
30	1200	575	326T	631	0306SDSC41A-P	30	93.3	1, 18	MTPFCP	$5,257
30	900	575	364T	807	0308SDSC41A-P	33	91.7	1, 18	MTPFCP	$9,504
30	900	230/460	364T	807	0308SDSR41A-P	84/42	91.7	1, 9, 18	MTPFCP	$9,504

Totally Enclosed Fan Cooled

EQP Global® SD

NEMA Premium® Efficiency

EQP Global SD

HP	Speed (RPM)	Volts	Frame	Weight (lbs.)	Model Number	FL Amps	Nominal FL EFF	Notes	Discount Symbol	List Price
40	3600	230/460	324TS	640	0402SDSR41B-P	94/47	92.5	1, 9, 18	MTPFCP	$3,943
40	3600	575	324TS	639	0402SDSC41B-P	38	92.5	1, 18	MTPFCP	$3,943
40	1800	230/460	324T	669	0404SDSR41A-P	96/48	94.1	1, 9, 18	MTPFCP	$3,973
40	1800	230/460	324TS	668	0404SDSR41B-P	96/48	94.1	1, 9, 18	MTPFCP	$3,973
40	1800	575	324T	666	0404SDSC41A-P	38	94.1	1, 18	MTPFCP	$3,973
40	1800	575	324TS	666	0404SDSC41B-P	38	94.1	1, 18	MTPFCP	$3,973
40	1200	230/460	364T	811	0406SDSR41A-P	96/48	94.1	1, 9, 18	MTPFCP	$6,878
40	1200	575	364T	802	0406SDSC41A-P	38	94.1	1, 18	MTPFCP	$6,878
40	900	575	365T	834	0408SDSC41A-P	44	91.7	1, 18	MTPFCP	$10,960
40	900	230/460	365T	834	0408SDSR41A-P	110/55	91.7	1, 9, 18	MTPFCP	$10,960
50	3600	230/460	326TS	683	0502SDSR41B-P	116/58	93.0	1, 9, 18	MTPFCP	$5,467
50	3600	575	326TS	683	0502SDSC41B-P	46	93.0	1, 18	MTPFCP	$5,467
50	1800	230/460	326T	715	0504SDSR41A-P	120/60	94.5	1, 9, 18	MTPFCP	$4,845
50	1800	230/460	326TS	714	0504SDSR41B-P	120/60	94.5	1, 9, 18	MTPFCP	$4,845
50	1800	575	326T	716	0504SDSC41A-P	48	94.5	1, 18	MTPFCP	$4,845
50	1800	575	326TS	716	0504SDSC41B-P	48	94.5	1, 18	MTPFCP	$4,845
50	1200	230/460	365T	834	0506SDSR41A-P	120/60	94.1	1, 9, 18	MTPFCP	$8,029
50	1200	575	365T	833	0506SDSC41A-P	48	94.1	1, 18	MTPFCP	$8,029
50	900	575	404T	1241	B0508FLF3OMH	63	93.6	18	MXTFCG	$18,800
50	900	230/460	404T	1259	B0508FLF3UMH	158/79	93.6	18	MXTFCG	$18,800
60	3600	230/460	364TS	849	0602SDSR41B-P	138/69	93.6	1, 9, 18	MTPFCP	$6,737
60	3600	575	364TS	853	0602SDSC41B-P	55	93.7	1, 18	MTPFCP	$6,737
60	1800	230/460	364T	880	0604SDSR41A-P	138/69	95.1	1, 9, 18	MTPFCP	$6,828
60	1800	230/460	364TS	875	0604SDSR41B-P	138/69	95.1	1, 9, 18	MTPFCP	$6,828
60	1800	575	364T	895	0604SDSC41A-P	55	95.1	1, 18	MTPFCP	$6,828
60	1800	575	364TS	895	0604SDSC41B-P	55	95.1	1, 18	MTPFCP	$6,828
60	1200	230/460	404T	1259	0606SDSR41A-P	152/76	94.5	1, 9, 18	MTPFCP	$11,083
60	1200	575	404T	1241	0606SDSC41A-P	61	94.5	1, 18	MTPFCP	$11,083
60	900	575	405T	1319	B0608FLF3OSH	75	93.6	18	MXTFCG	$21,475
60	900	230/460	405T	1374	B0608FLF3USH	196/98	93.6	18	MXTFCG	$21,475
75	3600	230/460	365TS	895	0752SDSR41B-P	172/86	93.6	1, 9, 18	MTPFCP	$8,484
75	3600	575	365TS	895	0752SDSC41B-P	69	93.8	1, 18	MTPFCP	$8,484
75	1800	230/460	365T	961	0754SDSR41A-P	170/85	95.4	1, 9, 18	MTPFCP	$8,796
75	1800	230/460	365TS	961	0754SDSR41B-P	170/85	95.4	1, 9, 18	MTPFCP	$8,796
75	1800	575	365T	979	0754SDSC41A-P	69	95.4	1, 18	MTPFCP	$8,796
75	1800	575	365TS	979	0754SDSC41B-P	69	95.4	1, 18	MTPFCP	$8,796
75	1200	230/460	405T	1374	0756SDSR41A-P	188/94	94.5	1, 9, 18	MTPFCP	$12,411
75	1200	575	405T	1319	0756SDSC41A-P	75	94.5	1, 18	MTPFCP	$12,411
75	900	230/460	S444T	1786	0758SDSA41A	184/92	94.5	18	MXTFCG	$23,270
75	900	230/460	S444T	1786	0758SDSA41A-R	184/92	94.5	2, 18	MXTFCG	$23,270
75	900	575	S444T	1786	0758SDSC41A	74	94.5	18	MXTFCG	$23,270
75	900	575	S444T	1786	0758SDSC41A-R	74	94.5	2, 18	MXTFCG	$23,270
100	3600	230/460	405TS	1305	1002SDSR41B-P	226/113	94.1	1, 9, 18	MTPFCP	$13,417
100	3600	575	405TS	1305	1002SDSC41B-P	73	94.1	1, 18	MTPFCP	$13,417
100	1800	230/460	405T	1367	1004SDSR41A-P	232/116	95.4	1, 9, 18	MTPFCP	$12,494
100	1800	575	405T	1367	1004SDSC41A-P	93	95.4	1, 18	MTPFCP	$12,494
100	1800	575	405T	1367	1004SDSC41A-PR	93	95.4	1, 2, 18	MTPFCP	$12,494
100	1800	230/460	405TS	1367	1004SDSR41B-P	232/116	95.4	1, 9, 18	MTPFCP	$12,494

Totally Enclosed Fan Cooled

EQP Global® SD

NEMA Premium® Efficiency

HP	Speed (RPM)	Volts	Frame	Weight (lbs.)	Model Number	FL Amps	Nominal FL EFF	Notes	Discount Symbol	List Price
100	1800	575	405TS	1367	1004SDSC41B-P	93	95.4	1, 18	MTPFCP	$12,494
100	1800	230/460	405T	1367	1004SDSR41A-PR	232/116	95.4	1, 2, 9, 18	MTPFCP	$12,494
100	1200	230/460	444T	2013	B1006FLF4USH01	246/123	95.5	2, 17, 18	MXTFCG	$19,098
100	1200	575	444T	1990	B1006FLF4OSH01	98.5	95.5	2, 17, 18	MXTFCG	$19,098
100	900	230/460	S445T	2086	1008SDSA41A	246/123	94.5	18	MXTFCG	$25,658
100	900	575	S445T	2086	1008SDSC41A	98	94.5	18	MXTFCG	$25,658
100	900	575	S445T	2086	1008SDSC41A-R	98	94.5	2, 18	MXTFCG	$25,658
100	900	230/460	S445T	2086	1008SDSA41A-R	246/123	94.5	2, 18	MXTFCG	$25,658
125	3600	230/460	444TS	1988	B1251FLG3USH	278/139	95.3	5, 17, 18	MXTFCG	$20,407
125	3600	575	444TS	1940	B1251FLG3OSH	111	95.3	5, 17, 18	MXTFCG	$20,407
125	3600	575	444TS	1940	B1253FLG3OSH01	111	95.3	4, 17, 18	MXTFCG	$20,407
125	3600	230/460	S444TS	1988	1252SDSA41B-P	265/137.5	95	1, 9, 18	MTPFCP	$20,407
125	3600	575	S444TS	1940	1252SDSC41A-P	110	95	1, 18	MTPFCP	$20,407
125	1800	575	444T	1951	B1254FLF4OSH01	116	95.7	2, 17, 18	MXTFCG	$16,734
125	1800	230/460	S444T	2500	1254SDSA41A-P	284/142	95.4	1, 9, 18	MTPFCP	$16,734
125	1800	230/460	S444T	2500	1254SDSA41A-PR	284/142	95.4	1, 2, 9, 18	MTPFCP	$16,734
125	1800	575	S444T	2500	1254SDSC41A-P	115	95.4	1, 18	MTPFCP	$16,734
125	1800	575	S444T	2500	1254SDSC41A-PR	115	95.4	1, 2, 18	MTPFCP	$16,734
125	1200	230/460	445T	2500	B1256FLF4USH01	312/156	95.5	2, 17, 18	MXTFCG	$20,159
125	1200	575	445T	2500	B1256FLF4OSH01	124	95.5	2, 17, 18	MXTFCG	$20,159
125	900	230/460	S447T	3800	1258SDSA41A	184/92	94.5	18	MXTFCG	$36,311
125	900	230/460	S447T	3800	1258SDSA41A-R	184/92	94.5	2, 18	MXTFCG	$36,311
125	900	575	S447T	3800	1258SDSC41A	123	94.5	18	MXTFCG	$36,311
125	900	575	S447T	3800	1258SDSC41A-R	123	94.5	2, 18	MXTFCG	$36,311
150	3600	575	445TS	2016	A1503FLG3OSH01	133	95.7	4, 6, 17, 18	MXTFCG	$21,648
150	3600	230/460	S445TS	2500	1502SDSA41B-P	326/163	95.0	1, 9, 18	MTPFCP	$21,648
150	3600	575	S445TS	2500	1502SDSC41A-P	131	95.0	1, 18	MTPFCP	$21,648
150	1800	575	445T	2111	B1504FLF4OSH01	140	95.8	2, 17, 18	MXTFCG	$18,867
150	1800	230/460	S445T	2500	1504SDSA41A-P	336/168	95.8	1, 9, 18	MTPFCP	$18,867
150	1800	230/460	S445T	2500	1504SDSA41A-PR	336/168	95.8	1, 2, 9, 18	MTPFCP	$18,867
150	1800	575	S445T	2500	1504SDSC41A-P	135	95.8	1, 18	MTPFCP	$18,867
150	1800	575	S445T	2500	1504SDSC41A-PR	135	95.8	1, 2, 18	MTPFCP	$18,867
150	1200	460	447T	2354	B1506FLF4BSH01	181	95.8	2, 17, 18	MXTFCG	$22,991
150	1200	460	447TZ	2354	B1506FLF4BSH	181	95.8	2, 17, 18	MXTFCG	$22,991
150	900	460	S449T	3820	1508SDSB41A	184	94.5	18	MXTFCG	$40,914
150	900	460	S449T	3820	1508SDSB41A-R	184	94.5	2, 18	MXTFCG	$40,914
150	900	575	S449T	3820	1508SDSC41A	147	94.5	18	MXTFCG	$40,914
150	900	575	S449T	3820	1508SDSC41A-R	147	94.5	2, 18	MXTFCG	$40,914
200	3600	460	S447TS	3820	2002SDSB41B-P	221	95.4	1, 9, 18	MTPFCP	$26,798
200	3600	575	S447TS	3820	2002SDSC41B-P	177	95.4	1, 18	MTPFCP	$26,798
200	1800	575	447T	2357	B2004FLF4OSH01	185	96.2	2, 17, 18	MXTFCG	$22,677
200	1800	575	447T	2345	B2004FLF3OSH	185	96.2	17, 18	MXTFCG	$22,677
200	1800	460	S447T	2500	2004SDSB41A-P	229	96.2	1, 9, 18	MTPFCP	$22,677
200	1800	460	S447T	2500	2004SDSB41A-PR	229	96.2	1, 2, 9, 18	MTPFCP	$22,677
200	1800	575	S447T	2500	2004SDSC41A-P	184	96.2	1, 18	MTPFCP	$22,677
200	1800	575	S447T	2500	2004SDSC41A-PR	184	96.2	1, 2, 18	MTPFCP	$22,677
200	1800	460	447TZ	2356	B2004FLF4BSH	232	96.2	2, 17, 18	MXTFCG	$22,677
200	1200	460	505UZ	2869	B2006FLF4BSH	233	96.0	2	MXTFCG	$32,565

Totally Enclosed Fan Cooled

EQP Global® SD

NEMA Premium® Efficiency

EQP Global SD

HP	Speed (RPM)	Volts	Frame	Weight (lbs.)	Model Number	FL Amps	Nominal FL EFF	Notes	Discount Symbol	List Price
200	1200	575	505UZ	2629	B2006FLF4OSH	186	96.0	2	MXTFCG	$32,565
200	1200	460	N449T	3315	B2006FLF4BMHL	245	96.2	2, 17, 18	MXTFCG	$29,966
200	1200	575	N449T	2629	B2006FLF4OMHL	189	96.2	2, 17, 18	MXTFCG	$29,966
200	1200	460	S449T	3820	2006SDSB41A	233	95.8	18	MXTFCG	$29,966
200	1200	460	S449T	3820	2006SDSB41A-R	233	95.8	2, 18	MXTFCG	$29,966
200	1200	575	S449T	3820	2006SDSC41A	186	95.8	18	MXTFCG	$29,966
200	1200	575	S449T	3820	2006SDSC41A-R	186	95.8	2, 18	MXTFCG	$29,966
200	900	460	S449T	3820	2008SDSB41A	247	94.5	18	MXTFCG	$42,011
200	900	460	S449T	3820	2008SDSB41A-R	247	94.5	2, 18	MXTFCG	$42,011
200	900	575	S449T	3820	2008SDSC41A	197	94.5	18	MXTFCG	$42,011
200	900	575	S449T	3820	2008SDSC41A-R	197	94.5	2, 18	MXTFCG	$42,011
250	3600	460	5010USS	3952	B2501FLG8BMH	271	95.9	5, 17	MXTFCG	$39,281
250	3600	460	5010USS	3952	B2503FLG8BMH	271	95.9	4, 17	MXTFCG	$39,281
250	3600	575	5010USS	3952	B2501FLG8OMH	220	95.9	5, 17	MXTFCG	$39,281
250	3600	575	5010USS	3952	B2503FLG8OMH	220	95.9	4, 17	MXTFCG	$39,281
250	3600	460	N449TS	3386	B2503FLG3BMHL	270	95.9	4, 17, 18	MXTFCG	$37,706
250	3600	460	B449TS	3820	2502SDSB41B	273	95.8	18	MXTFCG	$37,706
250	3600	575	B449TS	3820	2502SDSC41B	219	95.8	18	MXTFCG	$37,706
250	1800	460	505UZ	2930	B2504FLF4BMH	288	96.2	2	MXTFCG	$32,736
250	1800	575	505UZ	2915	B2504FLF4OMH	230	96.2	2	MXTFCG	$32,736
250	1800	460	S449T	3509	2504SDSB41A	276	96.2	18	MXTFCG	$32,553
250	1800	460	S449T	3544	2504SDSB41A-R	276	96.2	2, 18	MXTFCG	$32,553
250	1800	575	S449T	3537	2504SDSC41A	221	96.2	18	MXTFCG	$32,553
250	1800	575	S449T	3537	2504SDSC41A-R	221	96.2	2, 18	MXTFCG	$32,553
250	1200	460	5010US	4440	B2506FLG3BMH01	300	95.9		MXTFCG	$39,657
250	1200	575	5010US	4193	B2506FLG3OMH01	240	95.9		MXTFCG	$39,657
250	1200	460	5010UZ	4512	B2506FLF4BMH01	300	95.9	2	MXTFCG	$40,907
250	1200	575	5010UZ	4193	B2506FLF4OMH01	240	95.9	2	MXTFCG	$40,907
250	1200	460	N449T	3502	B2506FLF4BMHL	295	96.5	2, 17, 18	MXTFCG	$36,084
250	1200	575	N449T	3930	B2506FLF4OMHL	232	96.5	2, 17, 18	MXTFCG	$36,084
250	1200	460	S449T	3820	2506SDSB41A	295	95.8	18	MXTFCG	$36,084
250	1200	460	S449T	3820	2506SDSB41A-R	295	95.8	2, 18	MXTFCG	$36,084
250	1200	575	S449T	3820	2506SDSC41A	236	95.8	18	MXTFCG	$36,084
250	1200	575	S449T	3820	2506SDSC41A-R	236	95.8	2, 18	MXTFCG	$36,084
250	900	460	S449T	3930	2508SDSB41A	311	94.5	18	MXTFCG	$44,011
250	900	460	S449T	3930	2508SDSB41A-R	311	94.5	2, 18	MXTFCG	$44,011
250	900	575	S449T	3930	2508SDSC41A	253	94.5	18	MXTFCG	$44,011
250	900	575	S449T	3930	2508SDSC41A-R	253	94.5	2, 18	MXTFCG	$44,011
300	3600	460	5010USS	3954	B3001FLG8BMH	322	95.9	5	MXTFCG	$45,672
300	3600	460	5010USS	3954	B3003FLG8BMH	322	95.9	4	MXTFCG	$45,672
300	3600	575	5010USS	3954	B3001FLG8OMH	258	95.9	5	MXTFCG	$45,672
300	3600	575	5010USS	4543	B3003FLG8OMH	258	95.9	4	MXTFCG	$45,672
300	3600	460	N449TS	3604	B3001FLG3BMHL	328	95.8	5, 17, 18	MXTFCG	$44,452
300	3600	460	N449TS	3601	B3003FLG3BMHL	328	95.8	4, 17, 18	MXTFCG	$44,452
300	3600	575	N449TS	4000	B3003FLG3OMHL	261	95.8	4, 17, 18	MXTFCG	$44,452
300	3600	460	B449TS	4000	3002SDSB41B	326	95.8	18	MXTFCG	$44,452
300	3600	575	B449TS	4000	3002SDSC41B	261	95.8	18	MXTFCG	$44,452
300	1800	460	5010US	4476	B3004FLG3BMH01	330	96.5		MXTFCG	$38,887

Totally Enclosed Fan Cooled

EQP Global® SD

NEMA Premium® Efficiency

HP	Speed (RPM)	Volts	Frame	Weight (lbs.)	Model Number	FL Amps	Nominal FL EFF	Notes	Discount Symbol	List Price
300	1800	575	5010US	4378	B3004FLG3OMH01	264	96.5		MXTFCG	$38,887
300	1800	460	5010UZ	4508	B3004FLF4BMH01	330	96.5	2	MXTFCG	$40,137
300	1800	575	5010UZ	4540	B3004FLF4OMH01	264	96.5	2	MXTFCG	$40,137
300	1800	460	S449T	3607	3004SDSB41A	334	96.2	18	MXTFCG	$34,822
300	1800	460	S449T	3628	3004SDSB41A-R	334	96.2	2, 18	MXTFCG	$34,822
300	1800	575	S449T	3613	3004SDSC41A	267	96.2	18	MXTFCG	$34,822
300	1800	575	S449T	3613	3004SDSC41A-R	267	96.2	2, 18	MXTFCG	$34,822
300	1200	460	5010US	4232	B3006FLG3BMH01	362	96.1		MXTFCG	$50,806
300	1200	575	5010US	4232	B3006FLG3OMH	290	96.1		MXTFCG	$50,806
300	1200	460	5010UZ	4573	B3006FLF4BMH01	362	96.1	2	MXTFCG	$52,056
300	1200	575	5010UZ	4489	B3006FLF4OMH01	290	96.1	2	MXTFCG	$52,056
300	1200	460	N449T	3667	B3006FLF4BMHL	354	96.5	2, 17, 18	MXTFCG	$46,898
300	1200	460	B449T	4000	3006SDSB41A	357	95.8	18	MXTFCG	$46,898
300	1200	460	B449T	4000	3006SDSB41A-R	357	95.8	2, 18	MXTFCG	$46,898
300	1200	575	B449T	4000	3006SDSC41A	285	95.8	18	MXTFCG	$46,898
300	1200	575	B449T	4000	3006SDSC41A-R	285	95.8	2, 18	MXTFCG	$46,898
300	900	460	5810UZ	6083	F3008FLF4BMH	388	95.0	2, 18	MXTFCG	$55,094
300	900	575	5810UZ	6083	F3008FLF4OMH	310	95.0	2, 18	MXTFCG	$55,094
300	900	460	5810US	6083	F3008FLF3BMH	388	95.0	18	MXTFCG	$55,094
300	900	575	5810US	6083	F3008FLG3OMH	310	95.0	18	MXTFCG	$55,094
350	3600	460	5010USS	3975	B3503FLG8BMH	380	95.8	4	MXTFCG	$49,150
350	3600	575	5010USS	3975	B3503FLG8OMH	304	95.9	4	MXTFCG	$49,150
350	3600	460	N449TS	3616	B3501FLG3BMHL	382	95.8	5, 17, 18	MXTFCG	$46,820
350	3600	460	N449TS	3594	B3503FLG3BMHL	382	95.8	4, 17, 18	MXTFCG	$46,820
350	3600	460	B449TS	4000	3503SDSB41B	380	95.8	4, 18	MXTFCG	$46,820
350	3600	575	B449TS	4000	3503SDSC41B	304	95.8	4, 18	MXTFCG	$46,820
350	1800	460	5010US	4459	B3504FLG3BMH01	388	96.3		MXTFCG	$41,254
350	1800	575	5010US	4121	B3504FLG3OMH01	308	96.3		MXTFCG	$41,254
350	1800	460	5010UZ	4561	B3504FLF4BMH01	388	96.3	2	MXTFCG	$42,504
350	1800	575	5010UZ	4544	B3504FLF4OMH	308	96.3	2	MXTFCG	$42,504
350	1800	460	B449T	3669	3504SDSB41A	390	96.2	18	MXTFCG	$37,891
350	1800	460	B449T	3644	3504SDSB41A-R	390	96.2	2, 18	MXTFCG	$37,891
350	1800	575	B449T	3644	3504SDSC41A	315	96.2	18	MXTFCG	$37,891
350	1800	575	B449T	3644	3504SDSC41A-R	315	96.2	2, 18	MXTFCG	$37,891
350	1200	460	5010US	4735	B3506FLG3BMH	414	95.8		MXTFCG	$53,481
350	1200	575	5010US	4735	B3506FLG3OMH	333	95.8		MXTFCG	$53,481
350	1200	460	5010UZ	4735	B3506FLF4BMH	414	95.8	2	MXTFCG	$54,731
350	1200	575	5010UZ	4735	B3506FLF4OMH	333	95.8	2	MXTFCG	$54,731
350	1200	460	5011US	5000	3506FTAB41E-A	415	95.8	18	MXTFCG	$61,691
350	1200	460	5011UZ	5000	3506FTAB41E-AR	415	95.8	2, 18	MXTFCG	$62,941
350	1200	575	5011US	5000	3506FTAC41E-A	332	95.8	18	MXTFCG	$61,691
350	1200	575	5011UZ	5000	3506FTAC41G-AR	332	95.8	2, 18	MXTFCG	$62,941
350	1200	460	B449T	4000	3506SDSB41A	420	95.8	18	MXTFCG	$49,445
350	1200	460	B449T	4000	3506SDSB41A-R	420	95.8	2, 18	MXTFCG	$49,445
350	1200	575	B449T	4000	3506SDSC41A	336	95.8	18	MXTFCG	$49,445
350	1200	575	B449T	4000	3506SDSC41A-R	336	95.8	2, 18	MXTFCG	$49,445
350	900	460	5810UZ	6240	F3508FLF4BMH	444	95.4	2, 18	MXTFCG	$55,482
350	900	575	5810UZ	6240	F3508FLF4OMH	356	95.4	2, 18	MXTFCG	$55,482

Totally Enclosed Fan Cooled

EQP Global® SD

NEMA Premium® Efficiency

HP	Speed (RPM)	Volts	Frame	Weight (lbs.)	Model Number	FL Amps	Nominal FL EFF	Notes	Discount Symbol	List Price
350	900	460	5810US	6240	F3508FLG3BMH	444	95.4	18	MXTFCG	$55,482
350	900	575	5810US	6240	F3508FLG3OMH	356	95.4	18	MXTFCG	$55,482
400	3600	460	5010USS	4692	B4001FLG8BMH	438	96.0	5	MXTFCG	$58,324
400	3600	460	5010USS	4675	B4003FLG8BMH	438	96.0	4	MXTFCG	$58,324
400	3600	575	5010USS	4675	B4001FLG8OMH	350	96.0	5	MXTFCG	$58,324
400	3600	575	5010USS	4050	B4003FLG8OMH	350	96.0	4	MXTFCG	$58,324
400	3600	460	5011USS	5000	4003FTAB41F-A	441	95.9	4, 18	MXTFCG	$67,073
400	3600	575	5011USS	5000	4003FTAC41F-A	352	95.8	4, 18	MXTFCG	$67,073
400	3600	460	B449TS	4000	4003SDSB41B	435	95.8	4, 18	MXTFCG	$50,612
400	3600	575	B449TS	4000	4003SDSC41B	348	95.8	4, 18	MXTFCG	$50,612
400	1800	460	5010US	4538	B4004FLG3BMH01	450	96.8		MXTFCG	$54,565
400	1800	575	5010US	4017	B4004FLG3OMH01	357	96.2		MXTFCG	$54,565
400	1800	460	5010UZ	4575	B4004FLF4BMH01	450	96.8	2	MXTFCG	$55,815
400	1800	575	5010UZ	4603	B4004FLF4OMH01	357	96.2	2	MXTFCG	$55,815
400	1800	460	5011US	4700	4004FTAB41E-A	446	96.2	18	MXTFCG	$62,938
400	1800	460	5011UZ	5000	4004FTAB41E-AR	446	96.2	2, 18	MXTFCG	$64,188
400	1800	575	5011US	5000	4004FTAC41E-A	358	96.2	18	MXTFCG	$62,938
400	1800	575	5011UZ	5000	4004FTAC41G-AR	358	96.2	2, 18	MXTFCG	$64,188
400	1800	460	B449T	4100	4004SDSB41A	457	96.2	18	MXTFCG	$40,960
400	1800	460	B449T	4100	4004SDSB41A-R	457	96.2	2, 18	MXTFCG	$40,960
400	1800	575	B449T	4100	4004SDSC41A	365	96.2	18	MXTFCG	$40,960
400	1800	575	B449T	4100	4004SDSC41A-R	365	96.2	2, 18	MXTFCG	$40,960
400	1200	460	5010US	3937	F4006FLG3BMH	482	95.4		MXTFCG	$60,902
400	1200	575	5010US	4931	F4006FLG3OMH	386	95.4		MXTFCG	$60,902
400	1200	460	5010UZ	5035	F4006FLF4BMH	482	95.4	2	MXTFCG	$62,152
400	1200	575	5010UZ	4715	F4006FLF4OMH	386	95.4	2	MXTFCG	$62,152
450	3600	460	5010USS	4803	B4501FLG8BMH	493	96.1	5	MXTFCG	$65,623
450	3600	460	5010USS	4800	B4503FLG8BMH	493	96.1	4	MXTFCG	$65,623
450	3600	575	5010USS	4637	B4501FLG8OMH	394	96.1	5	MXTFCG	$65,623
450	3600	575	5010USS	4637	B4503FLG8OMH	394	96.1	4	MXTFCG	$65,623
450	3600	460	5011USS	5000	4503FTAB41F-A	494	95.8	4, 18	MXTFCG	$75,466
450	3600	575	5011USS	5000	4503FTAC41F-A	394	95.9	4, 18	MXTFCG	$75,466
450	1800	460	5011US	5000	4504FTAB41E-A	504	96.2	18	MXTFCG	$67,142
450	1800	460	5011UZ	4717	4504FTAB41E-AR	504	96.2	2, 18	MXTFCG	$74,964
450	1800	575	5011US	5000	4504FTAC41E-A	405	96.2	18	MXTFCG	$67,142
450	1800	575	5011UZ	4717	4504FTAC41G-AR	405	96.2	2, 18	MXTFCG	$74,964
450	1200	460	5810US	6120	F4506FLG3BMH	533	95.4	18	MXTFCG	$65,992
450	1200	575	5810US	6120	F4506FLG3OMH	426	95.4	18	MXTFCG	$65,992
450	1200	460	5810UZ	5856	F4506FLF4BMH	533	95.4	2, 18	MXTFCG	$67,242
450	1200	575	5810UZ	5856	F4506FLF4OMH	426	95.4	2, 18	MXTFCG	$67,242
500	3600	460	5010USS	4801	B5003FKG8BMH	547	96.1	3, 4, 14	MXTFCG	$72,911
500	3600	460	5010USS	4793	B5001FKG8BMH	547	96.1	3, 5, 14	MXTFCG	$72,911
500	3600	575	5010USS	4637	B5001FKG8OMH	438	96.1	3, 5, 14	MXTFCG	$72,911
500	3600	575	5010USS	4650	B5003FKG8OMH	438	96.1	3, 4, 14	MXTFCG	$72,911
500	3600	460	5011USS	5000	5003FTAB41F-A	549	96.1	4, 18	MXTFCG	$83,847
500	3600	575	5011USS	5000	5003FTAC41F-A	439	96.0	4, 18	MXTFCG	$83,847
500	1800	460	5011US	4709	5004FTAB41E-A	565	96.3	18	MXTFCG	$74,235
500	1800	460	5011UZ	4837	5004FTAB41G-AR	565	96.2	2, 18	MXTFCG	$74,235

Totally Enclosed Fan Cooled

EQP Global® SD

NEMA Premium® Efficiency

HP	Speed (RPM)	Volts	Frame	Weight (lbs.)	Model Number	FL Amps	Nominal FL EFF	Notes	Discount Symbol	List Price
500	1800	575	5011US	5000	5004FTAC41E-A	452	96.3	18	MXTFCG	$74,235
500	1800	575	5011UZ	4837	5004FTAC41G-AR	452	96.3	2, 18	MXTFCG	$82,884
500	1200	460	5810US	5859	F5006FLG3BMH	591	95.4	18	MXTFCG	$73,107
500	1200	575	5810US	6120	F5006FLG3OMH	476	95.8	18	MXTFCG	$73,107
500	1200	460	5810UZ	6032	F5006FLF4BMH	591	95.4	2, 18	MXTFCG	$74,357
500	1200	575	5810UZ	6032	F5006FLF4OMH	476	95.8	2, 18	MXTFCG	$74,357
600	3600	460	5810USS	5898	F6003FLG8BM	655	94.1	4, 18	MXTFCG	$89,775
600	3600	575	5810USS	6000	F6003FLG8OM	521	95.0	4, 18	MXTFCG	$89,775
600	1800	460	5810UZ	7800	F6004FLF4BM	675	95.4	2, 18	MXTFCG	$82,294
600	1800	460	5810US	7700	F6004FLG3BM	675	95.4	18	MXTFCG	$78,749
600	1800	575	5810UZ	7800	F6004FLF4OM	541	95.4	2, 18	MXTFCG	$82,294
600	1800	575	5810US	7700	F6004FLG3OM	541	95.4	18	MXTFCG	$78,749
600	1800	460	5810US	5961	F6004FLG3BMH	673	95.8	18	MXTFCG	$79,869
600	1800	575	5810US	6040	F6004FLG3OMH	540	95.8	18	MXTFCG	$79,869
600	1800	460	5810UZ	6040	F6004FLF4BMH	673	95.8	2, 18	MXTFCG	$84,550
600	1800	575	5810UZ	6040	F6004FLF4OMH	540	95.8	2, 18	MXTFCG	$84,550
600	1200	460	5810UZ	7800	F6006FLF4BM	737	95.4	2, 18	MXTFCG	$93,318
600	1200	460	5810US	7800	F6006FLG3BM	737	95.4	18	MXTFCG	$89,775
600	1200	575	5810UZ	7800	F6006FLF4OM	575	95.4	2, 18	MXTFCG	$93,318
600	1200	575	5810US	7800	F6006FLG3OM	575	95.4	18	MXTFCG	$89,775
600	900	460	6809L	11000	CUSTOM PRODUCTION	CF	CF		CF	CF
600	900	575	6809L	11000	CUSTOM PRODUCTION	CF	CF		CF	CF
700	3600	460	5811USS	6669	7003FTAB11F-A	800	95.4	4, 18	MXTFCG	$96,354
700	3600	575	5811USS	7000	7003FTAC11F-A	638	95.8	4, 18	MXTFCG	$96,354
700	1800	460	5811US	7000	7004FTAB11E-A	779	95.4	18	MXTFCG	$99,357
700	1800	460	5810UZ	7800	F7004FLF4BM	774	95.8	2, 18	MXTFCG	$95,418
700	1800	460	5810US	7800	F7004FLG3BM	774	95.8	18	MXTFCG	$91,875
700	1800	575	5811US	7000	7004FTAC11E-A	622	95.0	18	MXTFCG	$99,357
700	1800	575	5810UZ	7800	F7004FLF4OM	622	95.4	2, 18	MXTFCG	$95,418
700	1800	575	5810US	7800	F7004FLG3OM	622	95.4	18	MXTFCG	$91,875
700	1800	460	5810US	6126	F7004FLG3BMH	799	95.8	18	MXTFCG	$84,966
700	1800	575	5810US	6126	F7004FLG3OMH	640	95.8	18	MXTFCG	$84,966
700	1800	460	5810UZ	6032	F7004FLF4BMH	799	95.8	2, 18	MXTFCG	$86,216
700	1800	575	5810UZ	6032	F7004FLF4OMH	640	95.8	2, 18	MXTFCG	$86,216
700	1200	460	5811US	7000	7006FTAB11E-A	864	95.4	18	MXTFCG	$103,169
700	1200	575	5811US	7000	7006FTAC11E-A	761	95.8	18	MXTFCG	$103,169
700	900	460	6810L	11500	CUSTOM PRODUCTION	CF	CF		CF	CF
700	900	575	6810L	11500	CUSTOM PRODUCTION	CF	CF		CF	CF
800	3600	460	5811USS	6668	8003FTAB11F-A	910	95.8	4, 18	MXTFCG	$110,086
800	3600	575	6811H	9500	CUSTOM PRODUCTION	CF	CF		CF	CF
800	1800	460	5811US	7000	8004FTAB11E-A	888	95.4	18	MXTFCG	$101,643
800	1800	575	5811US	7000	8004FTAC11E-A	709	95.4	18	MXTFCG	$101,643
800	1200	460	6810	11500	CUSTOM PRODUCTION	CF	CF		CF	CF
800	1200	575	6810	11500	CUSTOM PRODUCTION	CF	CF		CF	CF
800	900	460	6811L	11500	CUSTOM PRODUCTION	CF	CF		CF	CF
800	900	575	6811L	11500	CUSTOM PRODUCTION	CF	CF		CF	CF
900	1800	460	6811	12500	CUSTOM PRODUCTION	CF	CF		CF	CF
900	1800	575	6811	12500	CUSTOM PRODUCTION	CF	CF		CF	CF

Totally Enclosed Fan Cooled

EQP Global® SD

NEMA Premium® Efficiency

HP	Speed (RPM)	Volts	Frame	Weight (lbs.)	Model Number	FL Amps	Nominal FL EFF	Notes	Discount Symbol	List Price
900	1200	460	6811	12500	CUSTOM PRODUCTION	CF	CF		CF	CF
900	1200	575	6811	12500	CUSTOM PRODUCTION	CF	CF		CF	CF
900	900	460	6811	12500	CUSTOM PRODUCTION	CF	CF		CF	CF
900	900	575	6811	12500	CUSTOM PRODUCTION	CF	CF		CF	CF
1000	1800	460	6811	12500	CUSTOM PRODUCTION	CF	CF		CF	CF
1000	1800	575	6811	12500	CUSTOM PRODUCTION	CF	CF		CF	CF
1000	1200	460	6811	12500	CUSTOM PRODUCTION	CF	CF		CF	CF
1000	1200	575	6811	12500	CUSTOM PRODUCTION	CF	CF		CF	CF

FL Amps and FL EFF are average expected design values and not guaranteed.
The weights listed above are estimated.
Please contact Toshiba for information on product availability.
"CF" = Consult Factory

Totally Enclosed Fan Cooled

EQP Global® SD C-Face

NEMA Premium® Efficiency

CC027B

3 THREE YEAR WARRANTY

Toshiba's general purpose, totally enclosed fan cooled, C-Face motor series is Toshiba's next-generation motor product line.

The TEFC C-Face motor is available in footed and footless designs and is designed to meet or exceed the competitive demands of the global market, as well as the amended integral horsepower (HP) rule IHMR 2016, while maintaining the high reliability and quality expected from Toshiba.

Product Scope:

Horsepower: 0.5 to 75 HP

Speed (60 Hz): 3600, 1800, or 1200 RPM
(50 Hz): 3000, 1500, or 1000 RPM

Volt (60 Hz): 230/460 or 575 V
(50 Hz): 190/380 V

Enclosure: Totally Enclosed Fan Cooled

Frame Size*: 56C through 365TC

Construction: Cast Iron Frame, Bearing Brackets & Conduit Box

Insulation: Class F Inverter Duty, Exceeds NEMA MG1 Part 31
(Voltage Withstand Capability of 2000 V in 0.1 µs)

* Production modifications not applicable to EQP Global Motors® 140 through 360 Frames use EQPIII Series base price for these frame sizes).

HP	Speed (RPM)	Volts	Frame	Weight (lbs.)	Model Number	FL Amps	Nominal FL EFF	Notes	Discount Symbol	List Price
C-Face Footed										
0.5	1800	230/460	56C	53	1/24FNSR32H-P	1.4/0.7	84	1, 9, 18	MTPFCP	$550
0.5	1800	575	56C	53	1/24FNSC32H-P	0.6	84	1, 18	MTPFCP	$550
0.5	1200	230/460	56C	52	1/26SDSR32H-P	1.8/0.9	81.5	1, 9, 18	MTPFCP	$597
0.5	1200	575	56C	52	1/26SDSC32H-P	0.7	81.5	1, 18	MTPFCP	$597
0.75	3600	230/460	56C	48	3/42SDSR32H-P	2.2/1.1	77	1, 9, 18	MTPFCP	$538
0.75	3600	575	56C	48	3/42SDSC32H-P	0.9	77	1, 18	MTPFCP	$538
0.75	1800	230/460	56C	53	3/44SDSR32H-P	2.4/1.2	85.8	1, 9, 18	MTPFCP	$574
0.75	1800	575	56C	53	3/44SDSC32H-P	0.9	85.8	1, 18	MTPFCP	$574
0.75	1200	230/460	56C	52	3/46SDSR32H-P	2.6/1.3	82.8	1, 9, 18	MTPFCP	$603
0.75	1200	575	56C	52	3/46SDSC32H-P	1.1	82.8	1, 18	MTPFCP	$603
0.75	1200	230/460	143TC	66	3/46SDSR42A-P	2.8/1.4	80.0	1, 9, 16, 18	MTPFCP	$685
0.75	1200	230/460	143TC	66	3/46SDSR47A-P	2.8/1.4	80.0	1, 9, 18	MTPFCP	$685
0.75	1200	575	143TC	66	3/46SDSC42A-P	1.1	81.5	1, 16, 18	MTPFCP	$686
0.75	1200	575	143TC	66	3/46SDSC47A-P	1.1	81.5	1, 18	MTPFCP	$686
1	3600	230/460	56C	48	0012SDSR42H-P	2.8/1.4	77	1, 9, 18	MTPFCP	$644
1	3600	575	56C	48	0012SDSC42H-P	1.1	77	1, 18	MTPFCP	$644

Totally Enclosed Fan Cooled

EQP Global® SD C-Face

NEMA Premium® Efficiency

HP	Speed (RPM)	Volts	Frame	Weight (lbs.)	Model Number	FL Amps	Nominal FL EFF	Notes	Discount Symbol	List Price
1	1800	230/460	56C	53	0014SDSR42H-P	3.2/1.6	85.5	1, 9, 18	MTPFCP	$685
1	1800	575	56C	53	0014SDSC42H-P	1.3	85.5	1, 18	MTPFCP	$685
1	1800	230/460	143TC	63	0014SDSR42A-P	3.4/1.7	85.5	1, 9, 16, 18	MTPFCP	$598
1	1800	230/460	143TC	64	0014SDSR47A-P	3.4/1.7	85.5	1, 9, 18	MTPFCP	$598
1	1800	575	143TC	62	0014SDSC42A-P	1.2	85.6	1, 16, 18	MTPFCP	$598
1	1800	575	143TC	63	0014SDSC47A-P	1.2	85.6	1, 18	MTPFCP	$598
1	1200	230/460	56C	56	0016SDSR42H-P	3.4/1.7	82.5	1, 9, 18	MTPFCP	$754
1	1200	575	56C	56	0016SDSC42H-P	1.3	82.5	1, 18	MTPFCP	$754
1	1200	230/460	145TC	66	0016SDSR42A-P	3.6/1.8	82.9	1, 9, 16, 18	MTPFCP	$716
1	1200	230/460	145TC	66	0016SDSR47A-P	3.6/1.8	82.9	1, 9, 18	MTPFCP	$716
1	1200	575	145TC	64	0016SDSC42A-P	1.5	82.9	1, 16, 18	MTPFCP	$716
1	1200	575	145TC	64	0016SDSC47A-P	1.5	82.9	1, 18	MTPFCP	$716
1.5	3600	230/460	56C	50	Y152SDSR42H-P	4.0/2.0	84	1, 9, 18	MTPFCP	$709
1.5	3600	575	56C	50	Y152SDSC42H-P	1.6	84	1, 18	MTPFCP	$709
1.5	3600	230/460	143TC	62	Y152SDSR42A-P	4.0/2.0	84.3	1, 9, 16, 18	MTPFCP	$641
1.5	3600	230/460	143TC	62	Y152SDSR47A-P	4.0/2.0	84.3	1, 9, 18	MTPFCP	$641
1.5	3600	575	143TC	60	Y152SDSC42A-P	1.6	84.3	1, 16, 18	MTPFCP	$641
1.5	3600	575	143TC	60	Y152SDSC47A-P	1.6	84.3	1, 18	MTPFCP	$641
1.5	1800	230/460	56C	55	Y154SDSR42H-P	4.4/2.2	86.5	1, 9, 18	MTPFCP	$717
1.5	1800	575	56C	55	Y154SDSC42H-P	1.8	86.5	1, 18	MTPFCP	$717
1.5	1800	230/460	145TC	64	Y154SDSR42A-P	4.8/2.4	86.5	1, 9, 16, 18	MTPFCP	$646
1.5	1800	230/460	145TC	66	Y154SDSR47A-P	4.8/2.4	86.5	1, 9, 18	MTPFCP	$646
1.5	1800	575	145TC	73	Y154SDSC42A-P	1.9	86.5	1, 16, 18	MTPFCP	$646
1.5	1800	575	145TC	73	Y154SDSC47A-P	1.9	86.5	1, 18	MTPFCP	$646
1.5	1200	230/460	56C	77	Y156SDSR42H-P	5.4/2.7	87.5	1, 9, 18	MTPFCP	$1,032
1.5	1200	575	56C	77	Y156SDSC42H-P	2.2	87.5	1, 18	MTPFCP	$1,032
1.5	1200	230/460	182TC	106	Y156SDSR42A-P	5.0/2.5	87.7	1, 9, 16, 18	MTPFCP	$779
1.5	1200	230/460	182TC	105	Y156SDSR47A-P	5.0/2.5	87.7	1, 9, 18	MTPFCP	$779
1.5	1200	575	182TC	106	Y156SDSC42A-P	2.0	87.5	1, 16, 18	MTPFCP	$779
1.5	1200	575	182TC	106	Y156SDSC47A-P	2.0	87.5	1, 18	MTPFCP	$779
2	3600	230/460	56C	53	0022SDSR42H-P	5.2/2.6	85.5	1, 9, 18	MTPFCP	$730
2	3600	575	56C	53	0022SDSC42H-P	2.1	85.5	1, 18	MTPFCP	$730
2	3600	230/460	145TC	66	0022SDSR42A-P	5.2/2.6	85.6	1, 9, 16, 18	MTPFCP	$754
2	3600	230/460	145TC	66	0022SDSR47A-P	5.2/2.6	85.6	1, 9, 18	MTPFCP	$754
2	3600	575	145TC	65	0022SDSC42A-P	2.1	85.5	1, 16, 18	MTPFCP	$754
2	3600	575	145TC	55	0022SDSC47A-P	2.1	85.5	1, 18	MTPFCP	$754
2	1800	230/460	56C	58	0024SDSR42H-P	6.0/3.0	86.5	1, 9, 18	MTPFCP	$725
2	1800	575	56C	58	0024SDSC42H-P	2.4	86.5	1, 18	MTPFCP	$725
2	1800	230/460	145TC	66	0024SDSR42A-P	6.0/3.0	86.5	1, 9, 16, 18	MTPFCP	$693
2	1800	230/460	145TC	66	0024SDSR47A-P	6.0/3.0	86.5	1, 9, 18	MTPFCP	$693
2	1800	575	145TC	66	0024SDSC42A-P	2.4	86.5	1, 16, 18	MTPFCP	$693
2	1800	575	145TC	66	0024SDSC47A-P	2.4	86.5	1, 18	MTPFCP	$693
2	1200	230/460	184TC	119	0026SDSR42A-P	6.8/3.4	88.5	1, 9, 16, 18	MTPFCP	$882
2	1200	230/460	184TC	121	0026SDSR47A-P	6.8/3.4	88.5	1, 9, 18	MTPFCP	$882
2	1200	575	184TC	118	0026SDSC42A-P	2.7	88.5	1, 16, 18	MTPFCP	$882
2	1200	575	184TC	119	0026SDSC47A-P	2.7	88.5	1, 18	MTPFCP	$882
3	3600	230/460	182TC	97	0032SDSR42A-P	7.4/3.7	86.7	1, 9, 16, 18	MTPFCP	$813
3	3600	230/460	182TC	95	0032SDSR47A-P	7.4/3.7	86.7	1, 9, 18	MTPFCP	$813

Totally Enclosed Fan Cooled

EQP Global® SD C-Face

NEMA Premium® Efficiency

HP	Speed (RPM)	Volts	Frame	Weight (lbs.)	Model Number	FL Amps	Nominal FL EFF	Notes	Discount Symbol	List Price
3	3600	575	182TC	97	0032SDSC42A-P	3.0	86.7	1, 16, 18	MTPFCP	$813
3	3600	575	182TC	97	0032SDSC47A-P	3.0	86.7	1, 18	MTPFCP	$813
3	1800	230/460	182TC	104	0034SDSR42A-P	8.0/4.0	89.5	1, 9, 16, 18	MTPFCP	$801
3	1800	230/460	182TC	108	0034SDSR47A-P	8.0/4.0	89.5	1, 9, 18	MTPFCP	$801
3	1800	575	182TC	108	0034SDSC42A-P	3.2	89.5	1, 16, 18	MTPFCP	$801
3	1800	575	182TC	108	0034SDSC47A-P	3.2	89.5	1, 18	MTPFCP	$801
3	1200	230/460	213TC	172	0036SDSR42A-P	8.8/4.4	89.6	1, 9, 16, 18	MTPFCP	$1,129
3	1200	230/460	213TC	171	0036SDSR47A-P	8.8/4.4	89.6	1, 9, 18	MTPFCP	$1,129
3	1200	575	213TC	172	0036SDSC42A-P	3.5	89.8	1, 16, 18	MTPFCP	$1,129
3	1200	575	213TC	172	0036SDSC47A-P	3.5	89.8	1, 18	MTPFCP	$1,129
5	3600	230/460	184TC	110	0052SDSR42A-P	11.6/5.8	88.7	1, 9, 16, 18	MTPFCP	$976
5	3600	230/460	184TC	108	0052SDSR47A-P	11.6/5.8	88.7	1, 9, 18	MTPFCP	$976
5	3600	575	184TC	110	0052SDSC42A-P	4.6	88.7	1, 16, 18	MTPFCP	$976
5	3600	575	184TC	110	0052SDSC47A-P	4.6	88.7	1, 18	MTPFCP	$976
5	1800	230/460	184TC	116	0054SDSR42A-P	13.8/6.9	89.5	1, 9, 16, 18	MTPFCP	$896
5	1800	230/460	184TC	119	0054SDSR47A-P	13.8/6.9	89.5	1, 9, 18	MTPFCP	$896
5	1800	575	184TC	117	0054SDSC42A-P	5.2	89.5	1, 16, 18	MTPFCP	$896
5	1800	575	184TC	117	0054SDSC47A-P	5.2	89.5	1, 18	MTPFCP	$896
5	1200	230/460	215TC	187	0056SDSR42A-P	13.8/6.9	89.6	1, 9, 16, 18	MTPFCP	$1,578
5	1200	230/460	215TC	143	0056SDSR47A-P	13.8/6.9	89.6	1, 9, 18	MTPFCP	$1,578
5	1200	575	215TC	206	0056SDSC42A-P	5.5	89.6	1, 16, 18	MTPFCP	$1,578
5	1200	575	215TC	206	0056SDSC47A-P	5.5	89.6	1, 18	MTPFCP	$1,578
7.5	3600	230/460	213TC	185	Y752SDSR42A-P	18.0/9.0	89.7	1, 9, 16, 18	MTPFCP	$1,214
7.5	3600	230/460	213TC	179	Y752SDSR47A-P	18.0/9.0	89.7	1, 9, 18	MTPFCP	$1,214
7.5	3600	575	213TC	185	Y752SDSC42A-P	7.2	89.7	1, 16, 18	MTPFCP	$1,214
7.5	3600	575	213TC	185	Y752SDSC47A-P	7.2	89.7	1, 18	MTPFCP	$1,214
7.5	1800	230/460	213TC	192	Y754SDSR42A-P	19.6/9.8	91.8	1, 9, 16, 18	MTPFCP	$1,214
7.5	1800	230/460	213TC	196	Y754SDSR47A-P	19.6/9.8	91.8	1, 9, 18	MTPFCP	$1,214
7.5	1800	575	213TC	196	Y754SDSC42A-P	7.8	91.8	1, 16, 18	MTPFCP	$1,214
7.5	1800	575	213TC	196	Y754SDSC47A-P	7.8	91.8	1, 18	MTPFCP	$1,214
7.5	1200	230/460	254TC	298	Y756SDSR42A-P	20.4/10.2	91.2	1, 9, 16, 18	MTPFCP	$2,031
7.5	1200	230/460	254TC	288	Y756SDSR47A-P	20.4/10.2	91.2	1, 9, 18	MTPFCP	$2,031
7.5	1200	575	254TC	325	Y756SDSC42A-P	8.2	91.1	1, 16, 18	MTPFCP	$2,031
7.5	1200	575	254TC	325	Y756SDSC47A-P	8.2	91.1	1, 18	MTPFCP	$2,031
10	3600	230/460	215TC	201	0102SDSR42A-P	23.6/11.8	90.2	1, 9, 16, 18	MTPFCP	$1,421
10	3600	230/460	215TC	196	0102SDSR47A-P	23.6/11.8	90.2	1, 9, 18	MTPFCP	$1,421
10	3600	575	215TC	198	0102SDSC42A-P	9.4	91.7	1, 16, 18	MTPFCP	$1,421
10	3600	575	215TC	198	0102SDSC47A-P	9.4	91.7	1, 18	MTPFCP	$1,421
10	1800	230/460	215TC	205	0104SDSR42A-P	26/13	91.8	1, 9, 16, 18	MTPFCP	$1,439
10	1800	230/460	215TC	207	0104SDSR47A-P	26/13	91.8	1, 9, 18	MTPFCP	$1,439
10	1800	575	215TC	207	0104SDSC42A-P	10.4	91.8	1, 16, 18	MTPFCP	$1,439
10	1800	575	215TC	207	0104SDSC47A-P	10.4	91.8	1, 18	MTPFCP	$1,439
10	1200	230/460	256TC	306	0106SDSR42A-P	26.8/13.4	91.3	1, 9, 16, 18	MTPFCP	$2,423
10	1200	230/460	256TC	306	0106SDSR47A-P	26.8/13.4	91.3	1, 9, 18	MTPFCP	$2,423
10	1200	575	256TC	306	0106SDSC42A-P	10.8	91.2	1, 16, 18	MTPFCP	$2,423
10	1200	575	256TC	306	0106SDSC47A-P	10.8	91.2	1, 18	MTPFCP	$2,423
15	3600	230/460	254TC	313	0152SDSR42A-P	36/18	91.2	1, 9, 16, 18	MTPFCP	$1,977
15	3600	230/460	254TC	309	0152SDSR47A-P	36/18	91.2	1, 9, 18	MTPFCP	$1,977

Totally Enclosed Fan Cooled

EQP Global® SD C-Face

NEMA Premium® Efficiency

HP	Speed (RPM)	Volts	Frame	Weight (lbs.)	Model Number	FL Amps	Nominal FL EFF	Notes	Discount Symbol	List Price
15	3600	575	254TC	313	0152SDSC42A-P	14.4	91.4	1, 16, 18	MTPFCP	$1,977
15	3600	575	254TC	313	0152SDSC47A-P	14.4	91.4	1, 18	MTPFCP	$1,977
15	1800	230/460	254TC	316	0154SDSR42A-P	38/19	92.6	1, 9, 16, 18	MTPFCP	$1,969
15	1800	230/460	254TC	326	0154SDSR47A-P	38/19	92.6	1, 9, 18	MTPFCP	$1,969
15	1800	575	254TC	317	0154SDSC42A-P	15.2	92.6	1, 16, 18	MTPFCP	$1,969
15	1800	575	254TC	317	0154SDSC47A-P	15.2	92.6	1, 18	MTPFCP	$1,969
15	1200	230/460	284TC	441	0156SDSR42A-P	40/20	91.9	1, 9, 16, 18	MTPFCP	$3,467
15	1200	575	284TC	440	0156SDSC42A-P	15.8	91.8	1, 16, 18	MTPFCP	$3,467
20	3600	230/460	256TC	331	0202SDSR42A-P	48/24	91.3	1, 9, 16, 18	MTPFCP	$2,483
20	3600	230/460	256TC	318	0202SDSR47A-P	48/24	91.3	1, 9, 18	MTPFCP	$2,483
20	3600	575	256TC	331	0202SDSC42A-P	19.2	91.3	1, 16, 18	MTPFCP	$2,483
20	3600	575	256TC	331	0202SDSC47A-P	19.2	91.3	1, 18	MTPFCP	$2,483
20	1800	230/460	256TC	359	0204SDSR42A-P	50/25	93.3	1, 9, 16, 18	MTPFCP	$2,370
20	1800	230/460	256TC	366	0204SDSR47A-P	50/25	93.3	1, 9, 18	MTPFCP	$2,370
20	1800	575	256TC	362	0204SDSC42A-P	20	93.2	1, 16, 18	MTPFCP	$2,370
20	1800	575	256TC	362	0204SDSC47A-P	20	93.2	1, 18	MTPFCP	$2,370
20	1200	230/460	286TC	492	0206SDSR42A-P	50/25	91.8	1, 9, 18	MTPFCP	$3,986
20	1200	575	286TC	492	0206SDSC42A-P	20	91.9	1, 18	MTPFCP	$3,986
25	3600	230/460	284TSC	489	0252SDSR42B-P	58/29	91.8	1, 9, 18	MTPFCP	$3,163
25	3600	575	284TSC	440	0252SDSC42B-P	23	91.8	1, 18	MTPFCP	$3,163
25	1800	230/460	284TC	511	0254SDSR42A-P	62/31	93.8	1, 9, 18	MTPFCP	$2,994
25	1800	575	284TC	514	0254SDSC42A-P	24	93.6	1, 18	MTPFCP	$2,994
25	1200	230/460	324TC	639	0256SDSR42A-P	62/31	93.3	1, 9, 18	MTPFCP	$4,798
25	1200	575	324TC	639	0256SDSC42A-P	25	93.3	1, 18	MTPFCP	$4,798
30	3600	230/460	286TSC	509	0302SDSR42B-P	70/35	91.9	1, 9, 18	MTPFCP	$3,569
30	3600	575	286TSC	485	0302SDSC42B-P	28	91.9	1, 18	MTPFCP	$3,569
30	1800	230/460	286TC	536	0304SDSR42A-P	72/36	93.8	1, 9, 18	MTPFCP	$3,511
30	1800	575	286TC	525	0304SDSC42A-P	29	93.8	1, 18	MTPFCP	$3,511
30	1200	230/460	326TC	659	0306SDSR42A-P	74/37	93.3	1, 9, 18	MTPFCP	$5,749
30	1200	575	326TC	659	0306SDSC42A-P	29.6	93.6	1, 18	MTPFCP	$5,749
40	3600	230/460	324TSC	666	0402SDSR42B-P	94/47	92.5	1, 9, 18	MTPFCP	$4,435
40	3600	575	324TSC	550	0402SDSC42B-P	38	92.5	1, 18	MTPFCP	$4,435
40	1800	230/460	324TC	683	0404SDSR42A-P	96/48	94.1	1, 9, 18	MTPFCP	$4,465
40	1800	575	324TC	690	0404SDSC42A-P	38	94.1	1, 18	MTPFCP	$4,465
40	1200	230/460	364TC	820	0406SDSR42A-P	96/48	94.1	1, 9, 18	MTPFCP	$7,698
40	1200	575	364TC	820	0406SDSC42A-P	38	94.1	1, 18	MTPFCP	$7,698
50	3600	230/460	326TSC	690	0502SDSR42B-P	116/58	93.0	1, 9, 18	MTPFCP	$5,959
50	3600	575	326TSC	690	0502SDSC42B-P	46	93.0	1, 18	MTPFCP	$5,959
50	1800	230/460	326TC	737	0504SDSR42A-P	120/60	94.5	1, 9, 18	MTPFCP	$5,337
50	1800	575	326TC	752	0504SDSC42A-P	48	94.5	1, 18	MTPFCP	$5,337
50	1200	230/460	365TC	849	0506SDSR42A-P	120/60	94.1	1, 9, 18	MTPFCP	$8,849
50	1200	575	365TC	849	0506SDSC42A-P	48	94.1	1, 18	MTPFCP	$8,849
60	3600	230/460	364TSC	869	0602SDSR42B-P	138/69	93.6	1, 9, 18	MTPFCP	$7,557
60	3600	575	364TSC	869	0602SDSC42B-P	55	93.7	1, 18	MTPFCP	$7,557
60	1800	230/460	364TC	924	0604SDSR42A-P	138/69	95.1	1, 9, 18	MTPFCP	$7,648
60	1800	575	364TC	904	0604SDSC42A-P	55	95.1	1, 18	MTPFCP	$7,648
75	3600	230/460	365TSC	924	0752SDSR42B-P	172/86	93.6	1, 9, 18	MTPFCP	$9,304
75	3600	575	365TSC	924	0752SDSC42B-P	69	93.8	1, 18	MTPFCP	$9,304

Totally Enclosed Fan Cooled

EQP Global® SD C-Face

NEMA Premium® Efficiency

HP	Speed (RPM)	Volts	Frame	Weight (lbs.)	Model Number	FL Amps	Nominal FL EFF	Notes	Discount Symbol	List Price
75	1800	230/460	365TC	981	0754SDSR42A-P	170/85	95.4	1, 9, 18	MTPFCP	$9,616
75	1800	575	365TC	981	0754SDSC42A-P	69	95.4	1, 18	MTPFCP	$9,616
C-Face Footless										
0.5	1800	230/460	56C	53	1/24FNSR34H-P	1.4/0.7	84	1, 9	MTPFCP	$556
0.5	1800	575	56C	53	1/24FNSC34H-P	0.6	84	1	MTPFCP	$556
0.5	1200	230/460	56C	52	1/26SDSR34H-P	1.8/0.9	81.5	1, 9	MTPFCP	$598
0.5	1200	575	56C	52	1/26SDSC34H-P	0.7	81.5	1	MTPFCP	$598
0.75	3600	230/460	56C	48	3/42SDSR34H-P	2.2/1.1	77	1, 9	MTPFCP	$559
0.75	3600	575	56C	48	3/42SDSC34H-P	0.9	77	1	MTPFCP	$559
0.75	1800	230/460	56C	53	3/44SDSR34H-P	2.4/1.2	85.8	1, 9	MTPFCP	$579
0.75	1800	575	56C	53	3/44SDSC34H-P	0.9	85.8	1	MTPFCP	$579
0.75	1200	230/460	56C	52	3/46SDSR34H-P	2.6/1.3	82.8	1, 9	MTPFCP	$604
0.75	1200	575	56C	52	3/46SDSC34H-P	1.1	82.8	1	MTPFCP	$604
0.75	1200	230/460	143TC	62	3/46SDSR44A-P	2.8/1.4	80.0	1, 9	MTPFCP	$754
0.75	1200	575	143TC	62	3/46SDSC44A-P	1.1	81.5	1	MTPFCP	$754
1	3600	230/460	56C	48	0012SDSR44H-P	2.8/1.4	77	1, 9	MTPFCP	$643
1	3600	575	56C	48	0012SDSC44H-P	1.1	77	1	MTPFCP	$643
1	1800	230/460	56C	53	0014SDSR44H-P	3.2/1.6	85.5	1, 9	MTPFCP	$688
1	1800	575	56C	53	0014SDSC44H-P	1.3	85.5	1	MTPFCP	$688
1	1800	230/460	143TC	61	0014SDSR44A-P	3.4/1.7	85.5	1, 9	MTPFCP	$658
1	1800	575	143TC	62	0014SDSC44A-P	1.2	85.6	1	MTPFCP	$658
1	1200	230/460	56C	56	0016SDSR44H-P	3.4/1.7	82.5	1, 9	MTPFCP	$756
1	1200	575	56C	56	0016SDSC44H-P	1.3	82.5	1	MTPFCP	$756
1	1200	230/460	145TC	66	0016SDSR44A-P	3.6/1.8	82.9	1, 9	MTPFCP	$788
1	1200	575	145TC	66	0016SDSC44A-P	1.5	82.9	1	MTPFCP	$788
1.5	3600	230/460	56C	50	Y152SDSR44H-P	4.0/2.0	84	1, 9	MTPFCP	$712
1.5	3600	575	56C	50	Y152SDSC44H-P	1.6	84	1	MTPFCP	$712
1.5	3600	230/460	143TC	60	Y152SDSR44A-P	4.0/2.0	84.3	1, 9	MTPFCP	$705
1.5	3600	575	143TC	60	Y152SDSC44A-P	1.6	84.3	1	MTPFCP	$705
1.5	1800	230/460	56C	55	Y154SDSR44H-P	4.4/2.2	86.5	1, 9	MTPFCP	$720
1.5	1800	575	56C	55	Y154SDSC44H-P	1.8	86.5	1	MTPFCP	$720
1.5	1800	230/460	145TC	64	Y154SDSR44A-P	4.8/2.4	86.5	1, 9	MTPFCP	$711
1.5	1800	575	145TC	64	Y154SDSC44A-P	1.9	86.5	1	MTPFCP	$711
1.5	1200	230/460	56C	77	Y156SDSR44H-P	5.4/2.7	87.5	1, 9	MTPFCP	$1,038
1.5	1200	575	56C	77	Y156SDSC44H-P	2.2	87.5	1	MTPFCP	$1,038
1.5	1200	575	182TC	101	Y156SDSC44A-P	2.0	87.5	1	MTPFCP	$857
1.5	1200	230/460	182TC	101	Y156SDSR44A-P	5.0/2.5	87.7	1, 9	MTPFCP	$857
2	3600	230/460	56C	53	0022SDSR44H-P	5.2/2.6	85.5	1, 9	MTPFCP	$745
2	3600	575	56C	53	0022SDSC44H-P	2.1	85.5	1	MTPFCP	$745
2	3600	230/460	145TC	62	0022SDSR44A-P	5.2/2.6	85.6	1, 9	MTPFCP	$829
2	3600	575	145TC	55	0022SDSC44A-P	2.1	85.5	1	MTPFCP	$829
2	1800	230/460	56C	58	0024SDSR44H-P	6.0/3.0	86.5	1, 9	MTPFCP	$728
2	1800	575	56C	58	0024SDSC44H-P	2.4	86.5	1	MTPFCP	$728
2	1800	230/460	145TC	65	0024SDSR44A-P	6.0/3.0	86.5	1, 9	MTPFCP	$762
2	1800	575	145TC	68	0024SDSC44A-P	2.4	86.5	1	MTPFCP	$762
2	1200	230/460	184TC	115	0026SDSR44A-P	6.8/3.4	88.5	1, 9	MTPFCP	$970

Totally Enclosed Fan Cooled

EQP Global® SD C-Face

NEMA Premium® Efficiency

HP	Speed (RPM)	Volts	Frame	Weight (lbs.)	Model Number	FL Amps	Nominal FL EFF	Notes	Discount Symbol	List Price
2	1200	575	184TC	115	0026SDSC44A-P	2.7	88.5	1	MTPFCP	$970
3	3600	230/460	182TC	95	0032SDSR44A-P	7.4/3.7	86.7	1, 9	MTPFCP	$894
3	3600	575	182TC	95	0032SDSC44A-P	3.0	86.7	1	MTPFCP	$894
3	1800	230/460	182TC	102	0034SDSR44A-P	8.0/4.0	89.5	1, 9	MTPFCP	$881
3	1800	575	182TC	104	0034SDSC44A-P	3.2	89.5	1	MTPFCP	$881
3	1200	230/460	213TC	165	0036SDSR44A-P	8.8/4.4	89.6	1, 9	MTPFCP	$1,242
3	1200	575	213TC	165	0036SDSC44A-P	3.5	89.8	1	MTPFCP	$1,242
5	3600	230/460	184TC	106	0052SDSR44A-P	11.6/5.8	88.7	1, 9	MTPFCP	$1,074
5	3600	575	184TC	106	0052SDSC44A-P	4.6	88.7	1	MTPFCP	$1,074
5	1800	230/460	184TC	108	0054SDSR44A-P	13.8/6.9	89.5	1, 9	MTPFCP	$986
5	1800	575	184TC	115	0054SDSC44A-P	5.2	89.5	1	MTPFCP	$986
5	1200	230/460	215TC	181	0056SDSR44A-P	13.8/6.9	89.6	1, 9	MTPFCP	$1,736
5	1200	575	215TC	181	0056SDSC44A-P	5.5	89.6	1	MTPFCP	$1,736
7.5	3600	230/460	213TC	176	Y752SDSR44A-P	18.0/9.0	89.7	1, 9	MTPFCP	$1,335
7.5	3600	575	213TC	155	Y752SDSC44A-P	7.2	89.7	1	MTPFCP	$1,335
7.5	1800	230/460	213TC	190	Y754SDSR44A-P	19.6/9.8	91.8	1, 9	MTPFCP	$1,335
7.5	1800	575	213TC	190	Y754SDSC44A-P	7.8	91.8	1	MTPFCP	$1,335
7.5	1200	230/460	254TC	276	Y756SDSR44A-P	20.4/10.2	91.2	1, 9	MTPFCP	$2,234
7.5	1200	575	254TC	276	Y756SDSC44A-P	8.2	91.1	1	MTPFCP	$2,234
10	3600	230/460	215TC	185	0102SDSR44A-P	23.6/11.8	90.2	1, 9	MTPFCP	$1,563
10	3600	575	215TC	185	0102SDSC44A-P	9.4	91.7	1	MTPFCP	$1,563
10	1800	230/460	215TC	205	0104SDSR44A-P	26/13	91.8	1, 9	MTPFCP	$1,583
10	1800	575	215TC	201	0104SDSC44A-P	10.4	91.8	1	MTPFCP	$1,583
10	1200	230/460	256TC	295	0106SDSR44A-P	26.8/13.4	91.3	1, 9	MTPFCP	$2,665
10	1200	575	256TC	295	0106SDSC44A-P	10.8	91.2	1	MTPFCP	$2,665
15	3600	230/460	254TC	300	0152SDSR44A-P	36/18	91.2	1, 9	MTPFCP	$2,175
15	3600	575	254TC	300	0152SDSC44A-P	14.4	91.4	1	MTPFCP	$2,175
15	1800	230/460	254TC	322	0154SDSR44A-P	38/19	92.6	1, 9	MTPFCP	$2,166
15	1800	575	254TC	304	0154SDSC44A-P	15.2	92.6	1	MTPFCP	$2,166
15	1200	230/460	284TC	434	0156SDSR44A-P	40/20	91.9	1, 9	MTPFCP	$3,640
15	1200	575	284TC	434	0156SDSC44A-P	15.8	91.8	1	MTPFCP	$3,640
20	3600	230/460	256TC	313	0202SDSR44A-P	48/24	91.3	1, 9	MTPFCP	$2,731
20	3600	575	256TC	313	0202SDSC44A-P	19.2	91.3	1	MTPFCP	$2,731
20	1800	230/460	256TC	353	0204SDSR44A-P	50/25	93.3	1, 9	MTPFCP	$2,607
20	1800	575	256TC	353	0204SDSC44A-P	20	93.2	1	MTPFCP	$2,607
20	1200	230/460	286TC	478	0206SDSR44A-P	50/25	91.8	1, 9	MTPFCP	$4,185
20	1200	575	286TC	478	0206SDSC44A-P	20	91.9	1	MTPFCP	$4,185
25	3600	230/460	284TSC	474	0252SDSR44B-P	58/29	91.8	1, 9	MTPFCP	$3,321
25	3600	575	284TSC	474	0252SDSC44B-P	23	91.8	1	MTPFCP	$3,321
25	1800	230/460	284TC	489	0254SDSR44A-P	62/31	93.8	1, 9	MTPFCP	$3,144
25	1800	575	284TC	489	0254SDSC44A-P	24	93.6	1	MTPFCP	$3,144
25	1200	230/460	324TC	613	0256SDSR44A-P	62/31	93.3	1, 9	MTPFCP	$5,038
25	1200	575	324TC	613	0256SDSC44A-P	25	93.3	1	MTPFCP	$5,038
30	3600	230/460	286TSC	496	0302SDSR44B-P	70/35	91.9	1, 9	MTPFCP	$3,747
30	3600	575	286TSC	496	0302SDSC44B-P	28	91.9	1	MTPFCP	$3,747
30	1800	230/460	286TC	509	0304SDSR44A-P	72/36	93.8	1, 9	MTPFCP	$3,687
30	1800	575	286TC	509	0304SDSC44A-P	29	93.8	1	MTPFCP	$3,687
30	1200	230/460	326TC	633	0306SDSR44A-P	74/37	93.3	1, 9	MTPFCP	$6,036

Totally Enclosed Fan Cooled

EQP Global® SD C-Face

NEMA Premium® Efficiency

HP	Speed (RPM)	Volts	Frame	Weight (lbs.)	Model Number	FL Amps	Nominal FL EFF	Notes	Discount Symbol	List Price
30	1200	575	326TC	633	0306SDSC44A-P	30	93.3	1	MTPFCP	$6,036
40	3600	230/460	324TSC	642	0402SDSR44B-P	94/47	92.5	1, 9	MTPFCP	$4,657
40	3600	575	324TSC	642	0402SDSC44B-P	38	92.5	1	MTPFCP	$4,657
40	1800	230/460	324TC	668	0404SDSR44A-P	96/48	94.1	1, 9	MTPFCP	$4,688
40	1800	575	324TC	668	0404SDSC44A-P	38	94.1	1	MTPFCP	$4,688
40	1200	230/460	364TC	708	0406SDSR44A-P	96/48	94.1	1, 9	MTPFCP	$8,083
40	1200	575	364TC	708	0406SDSC44A-P	38	94.1	1	MTPFCP	$8,083
50	3600	230/460	326TSC	624	0502SDSR44B-P	116/58	93.0	1, 9	MTPFCP	$6,257
50	3600	575	326TSC	624	0502SDSC44B-P	46	93.0	1	MTPFCP	$6,257
50	1800	230/460	326TC	714	0504SDSR44A-P	120/60	94.5	1, 9	MTPFCP	$5,604
50	1800	575	326TC	714	0504SDSC44A-P	48	94.5	1	MTPFCP	$5,604
50	1200	230/460	365TC	757	0506SDSR44A-P	120/60	94.1	1, 9	MTPFCP	$9,291
50	1200	575	365TC	757	0506SDSC44A-P	48	94.1	1	MTPFCP	$9,291
60	3600	230/460	364TSC	833	0602SDSR44B-P	138/69	93.6	1, 9	MTPFCP	$7,935
60	3600	575	364TSC	833	0602SDSC44B-P	55	93.7	1	MTPFCP	$7,935
60	1800	230/460	364TC	880	0604SDSR44A-P	138/69	95.1	1, 9	MTPFCP	$8,030
60	1800	575	364TC	880	0604SDSC44A-P	55	95.1	1	MTPFCP	$8,030
75	3600	230/460	365TSC	814	0752SDSR44B-P	172/86	93.6	1, 9	MTPFCP	$9,769
75	3600	575	365TSC	814	0752SDSC44B-P	69	93.8	1	MTPFCP	$9,769
75	1800	230/460	365TC	959	0754SDSR44A-P	170/85	95.4	1, 9	MTPFCP	$10,097
75	1800	575	365TC	950	0754SDSC44A-P	69	95.4	1	MTPFCP	$10,097

FL Amps and FL EFF are average expected design values and not guaranteed.
The weights listed above are estimated.
Please contact Toshiba for information on product availability.
"CF" = Consult Factory

Totally Enclosed Fan Cooled

EQP Global® SD Top Mount

NEMA Premium® Efficiency

CC027B

3 THREE YEAR WARRANTY

The EQP Global® Top Mount motor series is designed for severe duty applications. The EQP Global® Top Mount features multiple new design enhancements, including a top-mounted conduit box for a reduced installation profile, that make it one of the lowest cost-of ownership products in the industry.

Product Scope:

Horsepower: 1 to 75 HP

Speed (60 Hz): 3600, 1800, or 1200 RPM
(50 Hz): 3000, 1500, or 1000 RPM

Volt (60 Hz): 230/460 or 575 V
(50 Hz): 190/380 V

Enclosure: Totally Enclosed Fan Cooled

Frame Size*: 143T through 365T

Construction: Cast Iron Frame, Bearing Brackets, & Conduit Box

Insulation: Class F Inverter Duty, Exceeds NEMA MG1 Part 31
(Voltage Withstand Capability of 2000 V in 0.1 µs)

* Production modifications not applicable to EQP Global Motors® 140 through 360 Frames.

HP	Speed (RPM)	Volts	Frame	Weight (lbs.)	Model Number	FL Amps	Nominal FL EFF	Notes	Discount Symbol	List Price
1	1800	230/460	143T	57	0014SDSR41A-P3	3.4/1.7	85.5	1, 9, 18	MTPFCP	$480
1	1800	575	143T	57	0014SDSC41A-P3	1.2	85.6	1, 18	MTPFCP	$480
1	1200	230/460	145T	56	0016SDSR41A-P3	3.6/1.8	82.9	1, 9, 18	MTPFCP	$576
1	1200	575	145T	56	0016SDSC41A-P3	1.5	82.9	1, 18	MTPFCP	$576
1.5	3600	230/460	143T	57	Y152SDSR41A-P3	4.0/2.0	84.3	1, 9, 18	MTPFCP	$523
1.5	3600	575	143T	57	Y152SDSC41A-P3	1.6	84.3	1, 18	MTPFCP	$523
1.5	1800	230/460	145T	59	Y154SDSR41A-P3	4.8/2.4	86.5	1, 9, 18	MTPFCP	$528
1.5	1800	575	145T	59	Y154SDSC41A-P3	1.9	86.5	1, 18	MTPFCP	$528
1.5	1200	230/460	182T	79	Y156SDSR41A-P3	5.0/2.5	87.7	1, 9, 18	MTPFCP	$637
1.5	1200	575	182T	79	Y156SDSC41A-P3	2.0	87.5	1, 18	MTPFCP	$637
2	3600	230/460	145T	59	0022SDSR41A-P3	5.2/2.6	85.6	1, 9, 18	MTPFCP	$633
2	3600	575	145T	59	0022SDSC41A-P3	2.1	85.5	1, 18	MTPFCP	$633
2	1800	230/460	145T	62	0024SDSR41A-P3	6.0/3.0	86.5	1, 9, 18	MTPFCP	$573
2	1800	575	145T	62	0024SDSC41A-P3	2.4	86.5	1, 18	MTPFCP	$573
2	1200	230/460	184T	93	0026SDSR41A-P3	6.8/3.4	88.5	1, 9, 18	MTPFCP	$738
2	1200	575	184T	93	0026SDSC41A-P3	2.7	88.5	1, 18	MTPFCP	$738
3	3600	230/460	182T	95	0032SDSR41A-P3	7.4/3.7	86.7	1, 9, 18	MTPFCP	$670
3	3600	575	182T	95	0032SDSC41A-P3	3.0	86.7	1, 18	MTPFCP	$670

Totally Enclosed Fan Cooled

EQP Global® SD Top Mount

NEMA Premium® Efficiency

HP	Speed (RPM)	Volts	Frame	Weight (lbs.)	Model Number	FL Amps	Nominal FL EFF	Notes	Discount Symbol	List Price
3	1800	230/460	182T	108	0034SDSR41A-P3	8.0/4.0	89.5	1, 9, 18	MTPFCP	$658
3	1800	575	182T	108	0034SDSC41A-P3	3.2	89.5	1, 18	MTPFCP	$658
3	1200	230/460	213T	147	0036SDSR41A-P3	8.8/4.4	89.6	1, 9, 18	MTPFCP	$938
3	1200	575	213T	147	0036SDSC41A-P3	3.5	89.8	1, 18	MTPFCP	$938
5	3600	230/460	184T	108	0052SDSR41A-P3	11.6/5.8	88.7	1, 9, 18	MTPFCP	$830
5	3600	575	184T	108	0052SDSC41A-P3	4.6	88.7	1, 18	MTPFCP	$830
5	1800	230/460	184T	110	0054SDSR41A-P3	13.8/6.9	89.5	1, 9, 18	MTPFCP	$751
5	1800	575	184T	110	0054SDSC41A-P3	5.2	89.5	1, 18	MTPFCP	$751
5	1200	230/460	215T	165	0056SDSR41A-P3	13.8/6.9	89.6	1, 9, 18	MTPFCP	$1,379
5	1200	575	215T	165	0056SDSC41A-P3	5.5	89.6	1, 18	MTPFCP	$1,379
7.5	3600	230/460	213T	178	Y752SDSR41A-P3	18.0/9.0	89.7	1, 9, 18	MTPFCP	$1,075
7.5	3600	575	213T	178	Y752SDSC41A-P3	7.2	89.7	1, 18	MTPFCP	$1,075
7.5	1800	230/460	213T	198	Y754SDSR41A-P3	19.6/9.8	91.8	1, 9, 18	MTPFCP	$1,075
7.5	1800	575	213T	198	Y754SDSC41A-P3	7.8	91.8	1, 18	MTPFCP	$1,075
7.5	1200	230/460	254T	252	Y756SDSR41A-P3	20.4/10.2	91.2	1, 9, 18	MTPFCP	$1,830
7.5	1200	575	254T	252	Y756SDSC41A-P3	8.2	91.1	1, 18	MTPFCP	$1,830
10	3600	230/460	215T	198	0102SDSR41A-P3	23.6/11.8	90.2	1, 9, 18	MTPFCP	$1,290
10	3600	575	215T	198	0102SDSC41A-P3	9.4	91.7	1, 18	MTPFCP	$1,290
10	1800	230/460	215T	209	0104SDSR41A-P3	26/13	91.8	1, 9, 18	MTPFCP	$1,308
10	1800	575	215T	209	0104SDSC41A-P3	10.4	91.8	1, 18	MTPFCP	$1,308
10	1200	230/460	256T	274	0106SDSR41A-P3	26.8/13.4	91.3	1, 9, 18	MTPFCP	$2,236
10	1200	575	256T	274	0106SDSC41A-P3	10.8	91.2	1, 18	MTPFCP	$2,236
15	3600	230/460	254T	325	0152SDSR41A-P3	36/18	91.2	1, 9, 18	MTPFCP	$1,774
15	3600	575	254T	326	0152SDSC41A-P3	14.4	91.4	1, 18	MTPFCP	$1,774
15	1800	230/460	254T	343	0154SDSR41A-P3	38/19	92.6	1, 9, 18	MTPFCP	$1,766
15	1800	575	254T	316	0154SDSC41A-P3	15.2	92.6	1, 18	MTPFCP	$1,766
15	1200	230/460	284T	364	0156SDSR41A-P3	40/20	91.9	1, 9, 18	MTPFCP	$3,135
15	1200	575	284T	364	0156SDSC41A-P3	15.8	91.8	1, 18	MTPFCP	$3,135
20	3600	230/460	256T	310	0202SDSR41A-P3	48/24	91.3	1, 9, 18	MTPFCP	$2,298
20	3600	575	256T	310	0202SDSC41A-P3	19.2	91.3	1, 18	MTPFCP	$2,298
20	1800	230/460	256T	380	0204SDSR41A-P3	50/25	93.3	1, 9, 18	MTPFCP	$2,181
20	1800	575	256T	381	0204SDSC41A-P3	20	93.2	1, 18	MTPFCP	$2,181
20	1200	230/460	286T	411	0206SDSR41A-P3	50/25	91.8	1, 9, 18	MTPFCP	$3,672
20	1200	575	286T	411	0206SDSC41A-P3	20	91.9	1, 18	MTPFCP	$3,672
25	3600	230/460	284TS	466	0252SDSR41B-P3	58/29	91.8	1, 9, 18	MTPFCP	$2,820
25	3600	575	284TS	466	0252SDSC41B-P3	23	91.8	1, 18	MTPFCP	$2,820
25	1800	230/460	284T	499	0254SDSR41A-P3	62/31	93.8	1, 9, 18	MTPFCP	$2,645
25	1800	575	284T	499	0254SDSC41A-P3	24	93.6	1, 18	MTPFCP	$2,645
25	1200	230/460	324T	545	0256SDSR41A-P3	62/31	93.3	1, 9, 18	MTPFCP	$4,457
25	1200	575	324T	545	0256SDSC41A-P3	25	93.3	1, 18	MTPFCP	$4,457
30	3600	230/460	286TS	495	0302SDSR41B-P3	70/35	91.9	1, 9, 18	MTPFCP	$3,241
30	3600	575	286TS	495	0302SDSC41B-P3	28	91.9	1, 18	MTPFCP	$3,241
30	1800	230/460	286T	504	0304SDSR41A-P3	72/36	93.8	1, 9, 18	MTPFCP	$3,181
30	1800	575	286T	517	0304SDSC41A-P3	29	93.8	1, 18	MTPFCP	$3,181
30	1200	230/460	326T	571	0306SDSR41A-P3	74/37	93.3	1, 9, 18	MTPFCP	$5,441
30	1200	575	326T	571	0306SDSC41A-P3	30	93.3	1, 18	MTPFCP	$5,441
40	3600	230/460	324TS	623	0402SDSR41B-P3	94/47	92.5	1, 9, 18	MTPFCP	$4,081
40	3600	575	324TS	623	0402SDSC41B-P3	38	92.5	1, 18	MTPFCP	$4,081

Totally Enclosed Fan Cooled

EQP Global® SD Top Mount

NEMA Premium® Efficiency

HP	Speed (RPM)	Volts	Frame	Weight (lbs.)	Model Number	FL Amps	Nominal FL EFF	Notes	Discount Symbol	List Price
40	1800	230/460	324T	656	0404SDSR41A-P3	96/48	94.1	1, 9, 18	MTPFCP	$4,112
40	1800	575	324T	656	0404SDSC41A-P3	38	94.1	1, 18	MTPFCP	$4,112
40	1200	230/460	364T	708	0406SDSR41A-P3	96/48	94.1	1, 9, 18	MTPFCP	$7,119
40	1200	575	364T	708	0406SDSC41A-P3	38	94.1	1, 18	MTPFCP	$7,119
50	3600	230/460	326TS	653	0502SDSR41B-P3	116/58	93.0	1, 9, 18	MTPFCP	$5,658
50	3600	575	326TS	653	0502SDSC41B-P3	46	93.0	1, 18	MTPFCP	$5,658
50	1800	230/460	326T	711	0504SDSR41A-P3	120/60	94.5	1, 9, 18	MTPFCP	$5,015
50	1800	575	326T	711	0504SDSC41A-P3	48	94.5	1, 18	MTPFCP	$5,015
50	1200	230/460	365T	757	0506SDSR41A-P3	120/60	94.1	1, 9, 18	MTPFCP	$8,310
50	1200	575	365T	757	0506SDSC41A-P3	48	94.1	1, 18	MTPFCP	$8,310
60	3600	230/460	364TS	854	0602SDSR41B-P3	138/69	93.6	1, 9, 18	MTPFCP	$6,973
60	3600	575	364TS	854	0602SDSC41B-P3	55	93.7	1, 18	MTPFCP	$6,973
60	1800	230/460	364T	875	0604SDSR41A-P3	138/69	95.1	1, 9, 18	MTPFCP	$7,067
60	1800	575	364T	876	0604SDSC41A-P3	55	95.1	1, 18	MTPFCP	$7,067
75	3600	230/460	365TS	887	0752SDSR41B-P3	172/86	93.6	1, 9, 18	MTPFCP	$8,781
75	3600	575	365TS	887	0752SDSC41B-P3	69	93.8	1, 18	MTPFCP	$8,781
75	1800	230/460	365T	964	0754SDSR41A-P3	170/85	95.4	1, 9, 18	MTPFCP	$9,104
75	1800	575	365T	964	0754SDSC41A-P3	69	95.4	1, 18	MTPFCP	$9,104

FL Amps and FL EFF are average expected design values and not guaranteed.
The weights listed above are estimated.
Please contact Toshiba for information on product availability.
"CF" = Consult Factory

General Purpose TEFC

EQP Global® 840 Motor Series

Toshiba's general purpose, totally enclosed fan cooled, NEMA Premium® efficiency, EQP Global® 840 motor series is Toshiba's next-generation motor product line. This cutting-edge motor product line is designed to meet or exceed the competitive demands of the global market, as well as the amended integral horsepower (HP) rule IHMR 2016, while maintaining the high reliability and quality expected from Toshiba. The EQP Global® 840 specifically addresses the needs of the mill and chemical industries, incorporating many key features of an IEEE-841 motor. Building on over 20 years of success with our EQPIII motor series, the EQP Global® 840 features design enhancements on the rotor, frame, brackets, fan, and bearings.

Our EQP (efficiency, quality, and performance) philosophy extends beyond great products. We provide solutions and Global Supply Chain Management Systems (GSCMS) to meet the evolving needs of our global customers.

Standard Features:

- Totally Enclosed Fan Cooled
- Severe Duty, Mill & Chemical
- NEMA Premium® Efficiency
- 60 Hz: 460 or 575 V
- 50 Hz: 380 V
- Three-Phase
- Dual Frequency 50/ 60 Hz Design
- 1.15 Service Factor
- Footed, C-Face Footed, & C-Face Footless Design
- NEMA Design B
- Class F Insulation; Inverter Duty, Exceeds NEMA MG1 Part 31
- IP55 or IP56 Protection
- All Cast Iron Construction
- Multi-Mount Capabilities on Most Frames (See Appendix B)
- Multiple Drain Provisions for Horizontal & Vertical Mounting
- Double Shaft Seal Arrangement 324T-365T Frame (DE & ODE)
- Oversized 300 Series Bearings
- Labyrinth Seal 404T Frame & Larger (DE & ODE)
- 100% No-Load Commercial Test per IEEE 112 on All Motors
- 4142 High Strength Steel Shaft on all 440 Frames and Larger Roller Bearing Motors
- See Appendix C for ASD and Division 2 Capabilities

Applications:

- Pumps
- Fans
- Compressors
- Conveyors
- Mixers
- Material Handling

Totally Enclosed Fan Cooled

EQP Global® 840

NEMA Premium® Efficiency

CC027B

3 THREE YEAR WARRANTY

EQP Global® 840

Toshiba's general purpose, totally enclosed fan cooled, NEMA Premium® efficiency, EQP Global® 840 motor series is Toshiba's next-generation motor product line. This cutting-edge motor product line is designed to meet or exceed the competitive demands of the global market, as well as the amended integral horsepower (HP) rule IHMR 2016, while maintaining the high reliability and quality expected from Toshiba.

The EQP Global® 840 specifically addresses the needs of the mill and chemical industries, incorporating many key features of an IEEE-841 motor. Building on over 20 years of success with our EQPIII motor series, the EQP Global® 840 features design enhancements on the rotor, frame, brackets, fan, and bearings.

Product Scope:

Horsepower: 0.75 to 500 HP

Speed (60 Hz): 3600, 1800, 1200, or 900 RPM
(50 Hz)*: 3000, 1500, 1000, or 750 RPM

Volt (60 Hz): 460 or 575 V
(50 Hz): 380 V, 143T through S447T

Enclosure: Totally Enclosed Fan Cooled

Frame Size*: 143T through 5810UZ

Construction: All Cast Iron

Insulation: Class F Inverter Duty, Exceeds NEMA MG1 Part 31 (Voltage Withstand Capability of 2000 V in 0.1 µs)

* Production modifications not applicable to EQP Global® Motors 140 through 360 Frames (use EQPIII Series base price for these frame sizes).

HP	Speed (RPM)	Volts	Frame	Weight (lbs.)	Model Number	FL Amps	Nominal FL EFF	Notes	Discount Symbol	List Price
0.75	1200	460	143T	64	3/46XSSB41A-P	1.4	80.0	1, 9, 18	MTP840	$610
0.75	1200	575	143T	64	3/46XSSC41A-P	1.1	81.5	1, 18	MTP840	$610
0.75	900	460	145T	66	3/48XSSB41A-P	1.5	75.5	1, 9, 18	MTP840	$1,064
0.75	900	575	145T	CF	3/48XSSC41A-P	1.2	75.5	1, 18	MTP840	$1,064
1	1800	460	143T	66	0014XSSB41A-P	1.7	85.5	1, 9, 18	MTP840	$552
1	1800	575	143T	64	0014XSSC41A-P	1.2	85.6	1, 18	MTP840	$552
1	1200	460	145T	66	0016XSSB41A-P	1.8	82.9	1, 9, 18	MTP840	$690
1	1200	575	145T	66	0016XSSC41A-P	1.5	82.9	1, 18	MTP840	$690
1	900	460	182T	99	0018XSSB41A-P	1.7	75.5	1, 9, 18	MTP840	$1,097
1	900	575	182T	CF	0018XSSC41A-P	1.6	75.5	1, 18	MTP840	$1,097
1.5	3600	460	143T	60	Y152XSSB41A-P	2.0	84.3	1, 9, 18	MTP840	$616
1.5	3600	575	143T	62	Y152XSSC41A-P	1.6	84.3	1, 18	MTP840	$616
1.5	1800	460	145T	66	Y154XSSB41A-P	2.4	86.5	1, 9, 18	MTP840	$615
1.5	1800	575	145T	66	Y154XSSC41A-P	1.9	86.5	1, 18	MTP840	$615
1.5	1200	460	182T	104	Y156XSSB41A-P	2.5	87.7	1, 9, 18	MTP840	$735
1.5	1200	575	182T	106	Y156XSSC41A-P	2.0	87.5	1, 18	MTP840	$735
1.5	900	460	184T	CF	Y158XSSB41A-P	2.7	78.5	1, 9, 18	MTP840	$1,262
1.5	900	575	184T	CF	Y158XSSC41A-P	2.2	78.5	1, 18	MTP840	$1,262
2	3600	460	145T	64	0022XSSB41A-P	2.6	85.6	1, 9, 18	MTP840	$695
2	3600	575	145T	64	0022XSSC41A-P	2.1	85.5	1, 18	MTP840	$695
2	1800	460	145T	73	0024XSSB41A-P	3.0	86.5	1, 9, 18	MTP840	$675
2	1800	575	145T	66	0024XSSC41A-P	2.4	86.5	1, 18	MTP840	$675

Totally Enclosed Fan Cooled

EQP Global® 840

NEMA Premium® Efficiency

HP	Speed (RPM)	Volts	Frame	Weight (lbs.)	Model Number	FL Amps	Nominal FL EFF	Notes	Discount Symbol	List Price
2	1200	460	184T	126	0026XSSB41A-P	3.4	88.5	1, 9, 18	MTP840	$820
2	1200	575	184T	119	0026XSSC41A-P	2.7	88.5	1, 18	MTP840	$820
2	900	460	213T	163	0028XSSB41A-P	3.0	84	1, 9, 18	MTP840	$1,658
2	900	575	213T	CF	0028XSSC41A-P	2.7	86.5	1, 18	MTP840	$1,658
3	3600	460	182T	95	0032XSSB41A-P	3.7	86.7	1, 9, 18	MTP840	$757
3	3600	575	182T	97	0032XSSC41A-P	3.0	86.7	1, 18	MTP840	$757
3	1800	460	182T	106	0034XSSB41A-P	4.0	89.5	1, 9, 18	MTP840	$711
3	1800	575	182T	103	0034XSSC41A-P	3.2	89.5	1, 18	MTP840	$711
3	1200	460	213T	174	0036XSSB41A-P	4.4	89.6	1, 9, 18	MTP840	$1,002
3	1200	575	213T	172	0036XSSC41A-P	3.5	89.8	1, 18	MTP840	$1,002
3	900	460	215T	176	0038XSSB41A-P	4.7	85.5	1, 9, 18	MTP840	$2,085
3	900	575	215T	CF	0038XSSC41A-P	3.8	87.5	1, 18	MTP840	$2,085
5	3600	460	184T	104	0052XSSB41A-P	5.8	88.7	1, 9, 18	MTP840	$937
5	3600	575	184T	110	0052XSSC41A-P	4.6	88.7	1, 18	MTP840	$937
5	1800	460	184T	115	0054XSSB41A-P	6.5	89.7	1, 9, 18	MTP840	$830
5	1800	575	184T	117	0054XSSC41A-P	5.2	89.5	1, 18	MTP840	$830
5	1200	460	215T	190	0056XSSB41A-P	6.9	89.6	1, 9, 18	MTP840	$1,411
5	1200	575	215T	187	0056XSSC41A-P	5.5	89.6	1, 18	MTP840	$1,411
5	900	460	254T	264	0058XSSB41A-P	7.4	86.5	1, 9, 18	MTP840	$3,067
5	900	575	254T	CF	0058XSSC41A-P	6.2	88.8	1, 18	MTP840	$3,067
7.5	3600	460	213T	174	Y752XSSB41A-P	9.0	89.7	1, 9, 18	MTP840	$1,212
7.5	3600	575	213T	179	Y752XSSC41A-P	7.2	89.7	1, 18	MTP840	$1,212
7.5	1800	460	213T	194	Y754XSSB41A-P	9.8	91.8	1, 9, 18	MTP840	$1,206
7.5	1800	575	213T	190	Y754XSSC41A-P	7.8	91.8	1, 18	MTP840	$1,206
7.5	1200	460	254T	289	Y756XSSB41A-P	10.2	91.2	1, 9, 18	MTP840	$2,018
7.5	1200	575	254T	280	Y756XSSC41A-P	8.2	91.1	1, 18	MTP840	$2,018
7.5	900	460	256T	273	Y758XSSB41A-P	11.3	86.5	1, 9, 18	MTP840	$3,475
7.5	900	575	256T	CF	Y758XSSC41A-P	9	89.5	1, 18	MTP840	$3,475
10	3600	460	215T	194	0102XSSB41A-P	11.8	90.2	1, 9, 18	MTP840	$1,423
10	3600	575	215T	196	0102XSSC41A-P	9.4	91.7	1, 18	MTP840	$1,423
10	1800	460	215T	205	0104XSSB41A-P	13.0	91.8	1, 9, 18	MTP840	$1,418
10	1800	575	215T	203	0104XSSC41A-P	10.4	91.8	1, 18	MTP840	$1,418
10	1200	460	256T	309	0106XSSB41A-P	13.4	91.3	1, 9, 18	MTP840	$2,478
10	1200	575	256T	304	0106XSSC41A-P	10.8	91.2	1, 18	MTP840	$2,478
10	900	460	284T	403	0108XSSB41A-P	14.5	89.5	1, 9, 18	MTP840	$4,519
10	900	575	284T	CF	0108XSSC41A-P	12.2	90.2	1, 18	MTP840	$4,519
15	3600	460	254T	304	0152XSSB41A-P	18.0	91.2	1, 9, 18	MTP840	$1,950
15	3600	575	254T	309	0152XSSC41A-P	14.4	91.4	1, 18	MTP840	$1,950
15	1800	460	254T	326	0154XSSB41A-P	19.0	92.6	1, 9, 18	MTP840	$1,870
15	1800	575	254T	320	0154XSSC41A-P	15.2	92.6	1, 18	MTP840	$1,870
15	1200	460	284T	452	0156XSSB41A-P	20	91.9	1, 9, 18	MTP840	$3,293
15	1200	575	284T	452	0156XSSC41A-P	15.8	91.8	1, 18	MTP840	$3,293
15	900	460	286T	436	0158XSSB41A-P	22	89.5	1, 9, 18	MTP840	$5,489
15	900	575	286T	CF	0158XSSC41A-P	18.5	90.2	1, 18	MTP840	$5,489
20	3600	460	256T	326	0202XSSB41A-P	24	91.3	1, 9, 18	MTP840	$2,357
20	3600	575	256T	325	0202XSSC41A-P	19.2	91.3	1, 18	MTP840	$2,357
20	1800	460	256T	371	0204XSSB41A-P	25.4	93.3	1, 9, 18	MTP840	$2,329
20	1800	575	256T	355	0204XSSC41A-P	20	93.2	1, 18	MTP840	$2,329

Totally Enclosed Fan Cooled

EQP Global® 840

NEMA Premium® Efficiency

EQP Global® 840

HP	Speed (RPM)	Volts	Frame	Weight (lbs.)	Model Number	FL Amps	Nominal FL EFF	Notes	Discount Symbol	List Price
20	1200	460	286T	492	0206XSSB41A-P	25	91.8	1, 9, 18	MTP840	$3,876
20	1200	575	286T	487	0206XSSC41A-P	20	91.9	1, 18	MTP840	$3,876
20	900	460	324T	585	0208XSSB41A-P	28	90.2	1, 9, 18	MTP840	$6,553
20	900	575	324T	CF	0208XSSC41A-P	24	94	1, 18	MTP840	$6,553
25	3600	460	284TS	502	0252XSSB41B-P	29	91.8	1, 9, 18	MTP840	$2,904
25	3600	575	284TS	492	0252XSSC41B-P	23	91.8	1, 18	MTP840	$2,904
25	1800	460	284T	530	0254XSSB41A-P	31	93.8	1, 9, 18	MTP840	$2,818
25	1800	460	284TS	743	0254XSSB41B-P	31	93.8	1, 9, 18	MTP840	$2,818
25	1800	575	284T	527	0254XSSC41A-P	24	93.6	1, 18	MTP840	$2,818
25	1800	575	284TS	527	0254XSSC41B-P	24	93.6	1, 18	MTP840	$2,818
25	1200	460	324T	655	0256XSSB41A-P	31	93.3	1, 9, 18	MTP840	$4,700
25	1200	575	324T	655	0256XSSC41A-P	25	93.3	1, 18	MTP840	$4,700
25	900	460	326T	612	0258XSSB41A-P	35	90.2	1, 9, 18	MTP840	$7,633
25	900	575	326T	CF	0258XSSC41A-P	28	91	1, 18	MTP840	$7,633
30	3600	460	286TS	538	0302XSSB41B-P	35	91.9	1, 9, 18	MTP840	$3,539
30	3600	575	286TS	522	0302XSSC41B-P	28	91.9	1, 18	MTP840	$3,539
30	1800	460	286T	544	0304XSSB41A-P	36	93.8	1, 9, 18	MTP840	$3,292
30	1800	460	286TS	536	0304XSSB41B-P	36	93.8	1, 9, 18	MTP840	$3,292
30	1800	575	286T	547	0304XSSC41A-P	29	93.8	1, 18	MTP840	$3,292
30	1800	575	286TS	547	0304XSSC41B-P	29	93.8	1, 18	MTP840	$3,292
30	1200	460	326T	682	0306XSSB41A-P	37	93.3	1, 9, 18	MTP840	$5,412
30	1200	575	326T	677	0306XSSC41A-P	30	93.3	1, 18	MTP840	$5,412
30	900	460	364T	CF	0308XSSB41A-P	42	91.7	1, 9, 18	MTP840	$10,264
30	900	575	364T	CF	0308XSSC41A-P	34	91.7	1, 18	MTP840	$10,264
40	3600	460	324TS	692	0402XSSB41B-P	47	92.5	1, 9, 18	MTP840	$4,459
40	3600	575	324TS	681	0402XSSC41B-P	38	92.5	1, 18	MTP840	$4,459
40	1800	460	324T	695	0404XSSB41A-P	48	94.1	1, 9, 18	MTP840	$4,284
40	1800	460	324TS	702	0404XSSB41B-P	48	94.1	1, 9, 18	MTP840	$4,284
40	1800	575	324T	699	0404XSSC41A-P	38	94.1	1, 18	MTP840	$4,284
40	1800	575	324TS	699	0404XSSC41B-P	38	94.1	1, 18	MTP840	$4,284
40	1200	460	364T	836	0406XSSB41A-P	48	94.1	1, 9, 18	MTP840	$7,335
40	1200	575	364T	842	0406XSSC41A-P	38	94.1	1, 18	MTP840	$7,335
40	900	460	365T	766	0408XSSB41A-P	55	91.7	1, 9, 18	MTP840	$11,837
40	900	575	365T	CF	0408XSSC41A-P	44	91.7	1, 18	MTP840	$11,837
50	3600	460	326TS	705	0502XSSB41B-P	58	93.0	1, 9, 18	MTP840	$5,789
50	3600	575	326TS	708	0502XSSC41B-P	46	93.0	1, 18	MTP840	$5,789
50	1800	460	326T	743	0504XSSB41A-P	60	94.5	1, 9, 18	MTP840	$4,978
50	1800	460	326TS	745	0504XSSB41B-P	60	94.5	1, 9, 18	MTP840	$4,978
50	1800	575	326T	752	0504XSSC41A-P	48	94.5	1, 18	MTP840	$4,978
50	1800	575	326TS	752	0504XSSC41B-P	48	94.5	1, 18	MTP840	$4,978
50	1200	460	365T	873	0506XSSB41A-P	60	94.1	1, 9, 18	MTP840	$8,421
50	1200	575	365T	877	0506XSSC41A-P	48	94.1	1, 18	MTP840	$8,421
50	900	460	404T	1300	B0508FLF3BMHD	79	93.6	18	MXT40G	$20,266
60	3600	460	364TS	899	0602XSSB41B-P	69	93.6	1, 9, 18	MTP840	$7,615
60	3600	575	364TS	899	0602XSSC41B-P	55	93.7	1, 18	MTP840	$7,615
60	1800	460	364T	919	0604XSSB41A-P	69	95.1	1, 9, 18	MTP840	$7,550
60	1800	460	364TS	917	0604XSSB41B-P	69	95.1	1, 9, 18	MTP840	$7,550
60	1800	575	364T	930	0604XSSC41A-P	55	95.1	1, 18	MTP840	$7,550

Totally Enclosed Fan Cooled

EQP Global® 840

NEMA Premium® Efficiency

EQP Global® 840

HP	Speed (RPM)	Volts	Frame	Weight (lbs.)	Model Number	FL Amps	Nominal FL EFF	Notes	Discount Symbol	List Price
60	1800	575	364TS	930	0604XSSC41B-P	55	95.1	1, 18	MTP840	$7,550
60	1200	460	404T	1300	0606XSSB41A-P	76	94.5	1, 9, 18	MTP840	$11,970
60	1200	575	404T	1327	0606XSSC41A-P	60	94.5	1, 18	MTP840	$11,970
60	900	460	405T	1495	B0608FLF3BSHD	98	93.6	18	MXT40G	$23,150
75	3600	460	365TS	929	0752XSSB41B-P	86	93.6	1, 9, 18	MTP840	$9,562
75	3600	575	365TS	933	0752XSSC41B-P	69	93.8	1, 18	MTP840	$9,562
75	1800	460	365T	1005	0754XSSB41A-P	85	95.4	1, 9, 18	MTP840	$9,060
75	1800	460	365TS	996	0754XSSB41B-P	85	95.4	1, 9, 18	MTP840	$9,060
75	1800	575	365T	994	0754XSSC41A-P	69	95.4	1, 18	MTP840	$9,060
75	1800	575	365TS	994	0754XSSC41B-P	55.2	95.4	1, 18	MTP840	$9,060
75	1200	460	405T	1495	0756XSSB41A-P	94	94.5	1, 9, 18	MTP840	$13,404
75	1200	575	405T	1419	0756XSSC41A-P	75	94.5	1, 18	MTP840	$13,404
75	1200	460	405T	1495	0756XSSB41A-PR	94	94.5	1, 2, 9, 18	MXT40G	$16,148
75	1200	575	405T	1419	0756XSSC41A-PR	75	94.5	1, 2, 18	MXT40G	$16,148
75	900	460	444T	1786	0758XSSB41A-R	92	94.5	2, 18	MXT40G	$25,248
75	900	460	S444T	1786	0758XSSB41A	92	94.5	18	MXT40M	$25,248
75	900	575	S444T	1786	0758XSSC41A	74	94.5	18	MXT40M	CF
75	900	575	S444T	1786	0758XSSC41A-R	74	94.5	2, 18	MXT40M	$28,157
100	3600	460	405TS	1345	1002XSSB41B-P	114	95.0	1, 9, 18	MTP840	$14,490
100	3600	575	405TS	1388	1002XSSC41B-P	91	95.0	1, 18	MTP840	$14,490
100	1800	460	405T	1367	1004XSSB41A-P	116	95.4	1, 9, 18	MTP840	$13,494
100	1800	575	405T	1367	1004XSSC41A-P	93	95.4	1, 18	MTP840	$13,494
100	1800	460	405T	1367	1004XSSB41A-PR	116	95.4	1, 2, 9, 18	MTP840	$13,494
100	1800	575	405T	1367	1004XSSC41A-PR	93	95.4	1, 2, 18	MTP840	$13,494
100	1800	460	405TS	1367	1004XSSB41B-P	116	95.4	1, 9, 18	MTP840	$13,494
100	1800	575	405TS	1367	1004XSSC41B-P	93	95.4	1, 18	MTP840	$13,494
100	1200	460	444T	2102	B1006FLF4BSHD01	123	95.5	2, 17, 18	MXT40G	$20,279
100	1200	575	444T	2096	B1006FLF4OSHD01	98.5	95.5	2, 17, 18	MXT40G	$20,279
100	1200	460	S444T	2102	1006XSSB41A-P	122	95.4	1, 18	MTP840	$19,224
100	1200	460	S444T	2102	1006XSSB41A-PR	122	95.4	1, 2, 18	MTP840	$19,224
100	1200	575	S444T	2102	1006XSSC41A-P	98	95.4	1, 18	MTP840	$19,224
100	1200	575	S444T	2102	1006XSSC41A-PR	98	95.4	1, 2, 18	MTP840	$19,224
100	900	460	S445T	2086	1008XSSB41A-R	123	94.5	2, 18	MXT40M	$27,839
100	900	575	S445T	2086	1008XSSC41A-R	98	94.5	2, 18	MXT40M	$27,839
125	3600	575	444TS	2033	B1253FLG3OSHD01	111	95.3	4, 17, 18	MXT40G	$21,738
125	3600	460	S444TS	1988	1252XSSB41B-P	138	95.4	1, 18	MTP840	$21,738
125	3600	575	S444TS	1940	1252XSSC41B-P	111	95.3	1, 18	MTP840	$21,738
125	1800	575	444T	2048	B1254FLF4OSHD01	116	95.7	2, 17, 18	MXT40G	$18,094
125	1800	460	S444T	2500	1254XSSB41A-P	142	95.4	1, 18	MTP840	$18,182
125	1800	460	S444T	2500	1254XSSB41A-PR	142	95.4	1, 2, 18	MTP840	$18,182
125	1800	575	S444T	2500	1254XSSC41A-P	115	95.4	1, 18	MTP840	$18,094
125	1800	575	S444T	2500	1254XSSC41A-PR	115	95.4	1, 2, 18	MTP840	$18,094
125	1200	460	445T	2150	B1256FLF3BSHD	156	95.4	17, 18	MXT40G	$22,013
125	1200	460	445T	2169	B1256FLF4BSHD01	156	95.5	2, 17, 18	MXT40G	$22,013
125	1200	575	445T	2169	B1256FLF4OSHD01	124	95.5	2, 17, 18	MXT40G	$22,013
125	1200	460	S445T	2500	1256XSSB41A-P	155	94.5	1, 18	MTP840	$22,013
125	1200	460	S445T	2500	1256XSSB41A-PR	155	94.5	1, 2, 18	MTP840	$22,013
125	1200	575	S445T	2500	1256XSSC41A-P	124	95.4	1, 18	MTP840	$22,013

Totally Enclosed Fan Cooled

EQP Global® 840

NEMA Premium® Efficiency

EQP Global® 840

HP	Speed (RPM)	Volts	Frame	Weight (lbs.)	Model Number	FL Amps	Nominal FL EFF	Notes	Discount Symbol	List Price
125	1200	575	S445T	2500	1256XSSC41A-PR	124	95.4	1, 2, 18	MTP840	$22,013
125	900	460	S447T	3800	1258XSSB41A-R	156	94.5	2, 18	MXT40G	$39,397
125	900	575	S447T	3800	1258XSSC41A-R	123	94.5	2, 18	MXT40G	$39,397
125	900	460	S447T	3800	1258XSSB41A	156	94.5	18	MXT40M	CF
150	3600	460	445TS	2150	A1503FLG3BSHD01	168	95.7	4, 6, 17, 18	MXT40G	$23,844
150	3600	460	S445TS	2500	1502XSSB41B-P	166	95.0	1, 18	MTP840	$23,844
150	3600	575	S445TS	2500	1502XSSC41B-P	132	95.0	1, 18	MTP840	$23,844
150	1800	575	445T	2166	B1504FLF4OSHD01	140	95.8	2, 17, 18	MXT40G	$20,422
150	1800	460	S445T	2500	1504XSSB41A-P	168	95.8	1, 18	MTP840	$20,422
150	1800	460	S445T	2500	1504XSSB41A-PR	168	95.8	1, 2, 18	MTP840	$20,422
150	1800	575	S445T	2500	1504XSSC41A-P	135	95.8	1, 18	MTP840	$20,422
150	1800	575	S445T	2500	1504XSSC41A-PR	135	95.8	1, 2, 18	MTP840	$20,422
150	1200	460	447T	2408	B1506FLF4BSHD01	181	95.8	2, 17, 18	MXT40G	$25,367
150	1200	575	447T	2413	B1506FLF4OSHD01	145	95.8	2, 17, 18	MXT40G	$25,367
150	1200	460	S447T	2500	1506XSSB41A-P	187	95.8	1, 18	MTP840	$25,367
150	1200	460	S447T	2500	1506XSSB41A-PR	187	95.8	1, 2, 18	MTP840	$25,367
150	1200	575	S447T	2500	1506XSSC41A-P	153	95.8	1, 18	MTP840	$25,367
150	1200	575	S447T	2500	1506XSSC41A-PR	153	95.8	1, 2, 18	MTP840	$25,367
150	900	460	S449T	3800	1508XSSB41A-R	184	94.5	2, 18	MXT40G	$44,391
150	900	575	S449T	3800	1508XSSC41A-R	147	94.5	2, 18	MXT40G	$44,391
200	3600	460	447TS	2408	B2001FLG3BSHD	180	96.0	5, 17, 18	MXT40G	$28,727
200	3600	460	447TS	2387	B2003FLG3BSHD	224	95.9	4, 17, 18	MXT40G	$28,727
200	3600	575	447TS	2393	B2003FLG3OSHD	180	96.0	4, 17, 18	MXT40G	$28,727
200	3600	460	S447TS	2500	2002XSSB41B-P	221	95.4	1, 18	MTP840	$28,727
200	3600	575	S447TS	2500	2002XSSC41B-P	177	95.4	1, 18	MTP840	$28,727
200	1800	460	447TZ	2453	B2004FLF4BSHD	232	96.2	2, 17, 18	MXT40G	$24,840
200	1800	460	S447T	2500	2004XSSB41A-P	229	96.2	1, 18	MTP840	$24,840
200	1800	460	S447T	2500	2004XSSB41A-PR	229	96.2	1, 2, 18	MTP840	$24,840
200	1800	575	S447T	2500	2004XSSC41A-P	184	96.2	1, 18	MTP840	$24,840
200	1800	575	S447T	2500	2004XSSC41A-PR	184	96.2	1, 2, 18	MTP840	$24,840
200	1200	460	N449T	3334	B2006FLF4BSHDL	245	96.2	2, 18	MXT40G	$33,177
200	1200	460	505US	2862	B2006FLG3BSHD	233	96.0		MXT40G	$34,116
200	1200	460	505UZ	2894	B2006FLF4BSHD	245	96.2	2	MXT40G	$35,230
200	1200	575	N449T	3334	B2006FLF4OSHDL	189	96.2	2, 18	MXT40G	$33,177
200	1200	575	505US	3000	B2006FLG3OSHD	186	96.0		MXT40G	$34,116
200	1200	575	505UZ	2898	B2006FLF4OSHD	186	96.0	2	MXT40G	$35,230
200	1200	460	S449T	3860	2006XSSB41A	233	95.8	18	MXT40M	$33,177
200	1200	460	S449T	3860	2006XSSB41A-R	233	95.8	2, 18	MXT40M	$33,177
200	1200	575	S449T	3860	2006XSSC41A	186	95.8	18	MXT40M	$33,177
200	1200	575	S449T	3860	2006XSSC41A-R	186	95.8	2, 18	MXT40M	$33,177
200	900	460	S449T	3800	2008XSSB41A- R	249	95.0	2, 18	MXT40G	$45,582
200	900	575	S449T	3800	2008XSSC41A- R	199	95.0	2, 18	MXT40G	$45,582
200	900	460	S449T	3860	2008XSSB41A	247	94.5	18	MXT40M	$45,582
200	900	575	S449T	3860	2008XSSC41A	197	94.5	18	MXT40M	$45,582
250	3600	460	5010USS	4152	B2501FLG3BMHD	271	95.9	5	MXT40G	$43,012
250	3600	460	5010USS	4152	B2503FLG3BMHD	270	95.9	4	MXT40G	$43,012
250	3600	575	5010USS	4152	B2501FLG3OMHD	220	95.9	5	MXT40G	$43,012
250	3600	575	5010USS	4152	B2503FLG3OMHD	216	95.8	4	MXT40G	$43,012

Totally Enclosed Fan Cooled

EQP Global® 840

NEMA Premium® Efficiency

HP	Speed (RPM)	Volts	Frame	Weight (lbs.)	Model Number	FL Amps	Nominal FL EFF	Notes	Discount Symbol	List Price
250	3600	460	B449TS	4015	2502XSSB41B	273	95.8	18	MXT40M	$41,289
250	3600	575	B449TS	4015	2502XSSC41B	219	95.8	18	MXT40M	$41,289
250	1800	460	N449T	3631	B2504FLF3BSHDL	276	96.2	18	MXT40G	$34,026
250	1800	460	N449T	3608	B2504FLF4BSHDL	276	96.2	2, 18	MXT40G	$34,026
250	1800	460	505US	2941	B2504FLG3BMHD	288	96.2		MXT40G	$34,477
250	1800	460	505UZ	3004	B2504FLF4BMHD	288	96.2	2	MXT40G	$35,846
250	1800	575	505US	2907	B2504FLG3OMHD	230	96.2		MXT40G	$34,477
250	1800	575	505UZ	2629	B2504FLF4OMHD	220	96.3	2	MXT40G	$35,846
250	1800	460	S449T	3631	2504XSSB41A-R	276	96.2	2, 18	MXT40G	$34,026
250	1800	460	S449T	3608	2504XSSB41A	276	96.2	18	MXT40G	$34,026
250	1800	575	S449T	3860	2504XSSC41A-R	221	96.2	2, 18	MXT40G	$34,026
250	1800	575	S449T	3860	2504XSSC41A	221	96.2	18	MXT40G	$34,026
250	1200	460	5010US	4193	B2506FLG3BMHD	300	95.9		MXT40G	$43,424
250	1200	460	5010UZ	4549	B2506FLF4BMHD	295	96.5	2	MXT40G	$44,793
250	1200	575	5010US	4193	B2506FLG3OMHD	240	95.9		MXT40G	$43,424
250	1200	575	5010UZ	4193	B2506FLF4OSHD	244	95.8	2	MXT40G	$44,793
250	1200	460	S449T	3860	2506XSSB41A	295	95.8	18	MXT40M	$39,512
250	1200	460	S449T	3860	2506XSSB41A-R	295	95.8	2, 18	MXT40M	$39,512
250	1200	575	S449T	3860	2506XSSC41A	236	95.8	18	MXT40M	$39,512
250	1200	575	S449T	3860	2506XSSC41A-R	236	95.8	2, 18	MXT40M	$39,512
250	900	460	B449T	4060	2508XSSB41A-R	316	94.5	2, 18	MXT40G	$47,752
250	900	575	B449T	4060	2508XSSC41A-R	253	94.5	2, 18	MXT40G	$47,752
300	3600	460	5010USS	3954	B3001FLG8BMHD	322	95.9	5	MXT40G	$49,959
300	3600	460	5010USS	3954	B3003FLG8BMHD	322	95.9	4	MXT40G	$49,959
300	3600	575	5010USS	4154	B3001FLG8OMHD	258	95.9	5	MXT40G	$49,959
300	3600	575	5010USS	4154	B3003FLG8OMHD	258	95.9	4	MXT40G	$49,959
300	3600	460	B449TS	4015	3002XSSB41B	326	95.8	18	MXT40M	$48,781
300	3600	575	B449TS	4015	3002XSSC41B	261	95.8	18	MXT40M	$48,781
300	1800	460	N449T	3648	B3004FLF3BMHDL	330	96.4	18	MXT40G	$38,131
300	1800	460	N449T	3688	B3004FLF4BMHDL	330	96.4	2, 18	MXT40G	$38,130
300	1800	460	5010US	4501	B3004FLG3BMHD	330	96.5		MXT40G	$40,554
300	1800	460	5010UZ	4564	B3004FLF4BMHD	330	96.5	2	MXT40G	$43,951
300	1800	575	5010US	4501	B3004FLG3OMHD	264	96.4		MXT40G	$40,554
300	1800	575	5010UZ	4400	B3004FLF4OMHD	264	96.4	2	MXT40G	$43,951
300	1800	460	S449T	3860	3004XSSB41A-R	334	96.2	2, 18	MXT40G	$38,131
300	1800	575	S449T	3860	3004XSSC41A-R	267	96.2	2, 18	MXT40G	$38,130
300	1800	460	S449T	3688	3004XSSB41A	330	96.4	18	MXT40G	$38,130
300	1800	575	S449T	3688	3004XSSC41A	330	96.4	18	MXT40G	$38,130
300	1200	460	5010US	4232	B3006FLG3BMHD	362	96.1		MXT40G	$55,016
300	1200	460	5010UZ	3967	B3006FLF4BMHD	362	96.1	2	MXT40G	$56,139
300	1200	575	N449T	3755	B3006FLF4OMHDL	283	96.4	2, 18	MXT40G	$50,981
300	1200	575	5010US	4232	B3006FLG3OMHD	290	96.1		MXT40G	$55,016
300	1200	575	5010UZ	4543	B3006FLF4OMHD	283	96.4	2	MXT40G	$56,139
300	1200	460	B449T	4060	3006XSSB41A	357	95.8	18	MXT40M	$50,981
300	1200	460	B449T	4060	3006XSSB41A-R	357	95.8	2, 18	MXT40M	$50,981
300	1200	575	B449T	4060	3006XSSC41A	285	95.8	18	MXT40M	$50,981
300	1200	575	B449T	4060	3006XSSC41A-R	285	95.8	2, 18	MXT40M	$50,981
300	900	460	5810UZ	7800	F3008FLF4BMHD	388	95.0	2, 18	MXT40G	$59,777

Totally Enclosed Fan Cooled

EQP Global® 840

NEMA Premium® Efficiency

EQP Global® 840

HP	Speed (RPM)	Volts	Frame	Weight (lbs.)	Model Number	FL Amps	Nominal FL EFF	Notes	Discount Symbol	List Price
300	900	575	5810UZ	7800	F3008FLF4OMHD	305	95.0	2, 18	MXT40G	$59,777
300	900	460	5810US	7800	F3008FLG3BMHD	388	95.0	18	MXT40G	$59,777
300	900	575	5810US	7800	B3008FLG3OMHD	305	95.0	18	MXT40G	$59,777
350	3600	460	5010USS	4175	B3503FLG8BMHD	380	95.8	4	MXT40G	$53,233
350	3600	575	N449TS	3596	B3501FLG3OMHDL	304	95.9	5, 18	MXT40G	$50,904
350	3600	575	5010USS	4175	B3503FLG8OMHD	304	95.9	4	MXT40G	$53,233
350	3600	460	B449TS	4015	3503XSSB41B	380	95.8	18	MXT40M	$50,566
350	3600	575	B449TS	4015	3503XSSC41B	304	95.8	18	MXT40M	$50,566
350	1800	460	N449T	3698	B3504FLF3BSHDL	380	96.2	18	MXT40G	$41,491
350	1800	460	N449T	3756	B3504FLF4BSHDL	380	96.2	2, 18	MXT40G	$41,491
350	1800	460	5010US	4492	B3504FLG3BMHD	388	96.3		MXT40G	$45,173
350	1800	460	5010UZ	3909	B3504FLF4BMHD	380	96.2	2	MXT40G	$46,542
350	1800	575	5010US	4321	B3504FLG3OMHD	308	96.3		MXT40G	$45,173
350	1800	575	5010UZ	3909	B3504FLF4OMHD	308	96.3	2	MXT40G	$46,542
350	1800	460	B449T	4060	3504XSSB41A-R	390	96.2	2, 18	MXT40G	$40,922
350	1800	575	B449T	4060	3504XSSC41A-R	315	96.2	2, 18	MXT40G	$40,922
350	1800	460	B449T	3686	3504XSSB41A	380	96.2	18	MXT40G	$40,922
350	1800	575	B449T	3800	3504XSSC41A	304	96.2	18	MXT40G	$40,922
350	1200	460	5010US	4400	B3506FLG3BMHD	414	95.8		MXT40G	$57,685
350	1200	460	5010UZ	4935	B3506FLF4BMHD	414	95.8	2	MXT40G	$58,815
350	1200	575	5010US	4400	B3506FLG3OMHD	340	95.8		MXT40G	$57,685
350	1200	575	5010UZ	4935	B3506FLF4OMHD	340	95.8	2	MXT40G	$58,815
350	1200	460	B449T	4060	3506XSSB41A	420	95.8	18	MXT40M	$53,401
350	1200	460	B449T	4060	3506XSSB41A-R	420	95.8	2, 18	MXT40M	$53,401
350	1200	575	B449T	4060	3506XSSC41A	336	95.8	18	MXT40M	$53,401
350	1200	575	B449T	4060	3506XSSC41A-R	336	95.8	2, 18	MXT40M	$53,401
350	900	460	5810UZ	7800	F3508FLF4BMHD	444	95.4	2, 18	MXT40G	$60,198
350	900	575	5810UZ	7800	F3508FLF4OMHD	353	95.4	2, 18	MXT40G	$60,198
350	900	460	5810US	7800	F3508FLG3BMHD	444	95.4	18	MXT40G	$60,198
350	900	575	5810US	7800	F3508FLG3OMHD	353	95.4	18	MXT40G	$60,198
400	3600	460	5010USS	4050	B4001FLG8BMHD	441	95.9	5	MXT40G	$62,409
400	3600	460	5010USS	4050	B4003FLG8BMHD	441	95.9	4	MXT40G	$62,409
400	3600	575	5010USS	4050	B4001FLG8OMHD	352	95.8	5	MXT40G	$62,409
400	3600	575	5010USS	4050	B4003FLG8OMHD	350	96.0	4	MXT40G	$62,409
400	1800	460	5010US	4563	B4004FLG3BMHD	450	96.8		MXT40G	$58,768
400	1800	460	5010UZ	4625	B4004FLF4BMHD	446	96.2	2	MXT40G	$59,899
400	1800	575	5010US	4017	B4004FLG3OMHD	358	96.2		MXT40G	$58,768
400	1800	575	5010UZ	4633	B4004FLF4OMHD	358	96.2	2	MXT40G	$59,899
400	1800	460	B449T	4060	4004XSSB41A	457	96.2	18	MXT40G	$44,237
400	1800	575	B449T	4060	4004XSSC41A	365	96.2	18	MXT40G	$44,237
400	1800	460	B449T	4060	4004XSSB41A-R	457	96.2	2, 18	MXT40G	$44,237
400	1800	575	B449T	4060	4004XSSC41A-R	365	96.2	2, 18	MXT40G	$44,237
400	1200	460	5010US	4998	F4006FLG3BMHD	482	95.4		MXT40G	$65,092
400	1200	460	5010UZ	5123	F4006FLF4BMHD	482	95.4	2	MXT40G	$66,236
400	1200	575	5010US	4500	F4006FLG3OMHD	386	95.4		MXT40G	$65,092
400	1200	575	5010UZ	4500	F4006FLF4OMHD	386	95.4	2	MXT40G	$66,236
400	900	460	5810UZ	7800	F4008FLF4BMHD	560	95.4	2, 18	MXT40G	$72,238
400	900	575	5810UZ	7800	F4008FLF4OMHD	400	95.4	2, 18	MXT40G	$72,238

Totally Enclosed Fan Cooled

EQP Global® 840

NEMA Premium® Efficiency

HP	Speed (RPM)	Volts	Frame	Weight (lbs.)	Model Number	FL Amps	Nominal FL EFF	Notes	Discount Symbol	List Price
400	900	460	5810US	7800	F4008FLG3BMHD	560	95.4	18	MXT40G	$72,238
400	900	575	5810US	7800	F4008FLG3OMHD	400	95.4	18	MXT40G	$72,238
450	3600	460	5010USS	4837	B4501FLG8BMHD	494	95.8	5	MXT40G	$69,708
450	3600	460	5010USS	6200	B4503FLG8BMHD	494	95.8	4	MXT40G	$69,708
450	3600	575	5010USS	4837	B4501FLG8OMHD	394	95.9	5	MXT40G	$69,708
450	3600	575	5010USS	4837	B4503FLG8OMHD	394	95.9	4	MXT40G	$69,708
450	1200	460	5810US	6240	F4506FLG3BMHD	533	95.4	18	MXT40G	$70,200
450	1200	460	5810UZ	6240	F4506FLF4BMHD	533	95.4	2, 18	MXT40G	$71,325
450	1200	575	5810US	6240	F4506FLG3OMHD	426	95.4	18	MXT40G	$70,200
450	1200	575	5810UZ	6240	F4506FLF4OMHD	426	95.4	2, 18	MXT40G	$71,325
500	3600	460	5010USS	4837	B5001FKG8BMHD	549	96.1	3, 5, 14	MXT40G	$76,995
500	3600	460	5010USS	4837	B5003FKG8BMHD	549	96.1	3, 4, 14	MXT40G	$76,995
500	3600	575	5010USS	4837	B5001FKG8OMHD	439	96.0	3, 5, 14	MXT40G	$76,995
500	3600	575	5010USS	4837	B5003FKG8OMHD	439	96.0	3, 4, 14	MXT40G	$76,995
500	1800	460	5011US	5037	5004XSSB41E	565	96.3	18	MXT40G	$77,982
500	1800	460	5011UZ	5037	5004XSSB41G-AR	565	96.3	2, 18	MXT40G	$88,286
500	1800	575	5011US	5037	5004XSSC41E	452	96.2	18	MXT40G	$77,982
500	1800	575	5011UZ	5037	5004XSSC41G-AR	452	96.2	2, 18	MXT40G	$88,286
500	1200	460	5810US	6120	F5006FLG3BMHD	591	95.4	18	MXT40G	$77,303
500	1200	460	5810UZ	6340	F5006FLF4BMHD	591	95.4	2, 18	MXT40G	$78,440
500	1200	575	5810US	6120	F5006FLG3OMHD	476	95.8	18	MXT40G	$77,303
500	1200	575	5810UZ	6340	F5006FLF4OMHD	476	95.8	2, 18	MXT40G	$78,440

FL Amps and FL EFF are average expected design values and not guaranteed.
The weights listed above are estimated.
Please contact Toshiba for information on product availability.
"CF" = Consult Factory

Totally Enclosed Fan Cooled

EQP Global® 840 C-Face

NEMA Premium® Efficiency

CC027B

3 THREE YEAR WARRANTY

EQP Global® 840

Toshiba's general purpose, totally enclosed fan cooled, NEMA Premium® efficiency, EQP Global® 840 C-Face motor series is Toshiba's next-generation motor product line. The EQP Global® 840 C-Face is designed to meet or exceed the competitive demands of the global market, as well as the amended integral horsepower (HP) rule IHMR 2016, while maintaining the high reliability and quality expected from Toshiba.

Available in C-Face Footed and C-Face Footless designs, the EQP Global® 840 C-Face motor specifically addresses the needs of the petrochemical industry, where premium performance and reliability are imperative. Building on over 20 years of success with our EQPIII motor series, this new motor line features design enhancements on the rotor, frame, brackets, fan, and bearings.

Product Scope:

Horsepower: 0.75 to 75 HP

Speed (60 Hz): 3600, 1800, or 1200 RPM

Volt (60 Hz): 460 or 575 V

Enclosure: Totally Enclosed Fan Cooled

Frame Size*: 143TC through 365TC

Construction: All Cast Iron

Insulation: Class F Inverter Duty, Exceeds NEMA MG1 Part 31 (Voltage Withstand Capability of 2000 V in 0.1 µs)

* Production modifications not applicable to EQP Global Motors® 140 through 360 Frames (use EQPIII Series base price for these frame sizes).

HP	Speed (RPM)	Volts	Frame	Weight (lbs.)	Model Number	FL Amps	Nominal FL EFF	Notes	Discount Symbol	List Price
C-Face Footed										
0.75	1200	460	143TC	68	3/46XSSB42A-P	1.4	80.0	1, 9, 16, 18	MTP840	$719
0.75	1200	460	143TC	68	3/46XSSB47A-P	1.4	80.0	1, 9, 18	MTP840	$719
0.75	1200	575	143TC	68	3/46XSSC42A-P	1.1	81.5	1, 16, 18	MTP840	$719
0.75	1200	575	143TC	68	3/46XSSC47A-P	1.1	81.5	1, 18	MTP840	$719
1	1800	460	143TC	68	0014XSSB42A-P	1.7	85.5	1, 9, 16, 18	MTP840	$661
1	1800	460	143TC	71	0014XSSB47A-P	1.7	85.5	1, 9, 18	MTP840	$661
1	1800	575	143TC	71	0014XSSC42A-P	1.2	85.6	1, 16, 18	MTP840	$661
1	1800	575	143TC	71	0014XSSC47A-P	1.2	85.6	1, 18	MTP840	$661
1	1200	460	145TC	71	0016XSSB42A-P	1.8	82.9	1, 9, 16, 18	MTP840	$799
1	1200	460	145TC	73	0016XSSB47A-P	1.8	82.9	1, 9, 18	MTP840	$799
1	1200	575	145TC	71	0016XSSC42A-P	1.5	82.9	1, 16, 18	MTP840	$799
1	1200	575	145TC	71	0016XSSC47A-P	1.5	82.9	1, 18	MTP840	$799
1.5	3600	460	143TC	66	Y152XSSB42A-P	2.0	84.3	1, 9, 16, 18	MTP840	$725
1.5	3600	460	143TC	66	Y152XSSB47A-P	2.0	84.3	1, 9, 18	MTP840	$725
1.5	3600	575	143TC	60	Y152XSSC42A-P	1.6	84.3	1, 16, 18	MTP840	$725
1.5	3600	575	143TC	60	Y152XSSC47A-P	1.6	84.3	1, 18	MTP840	$725

Totally Enclosed Fan Cooled

EQP Global® 840 C-Face

NEMA Premium® Efficiency

EQP Global® 840

HP	Speed (RPM)	Volts	Frame	Weight (lbs.)	Model Number	FL Amps	Nominal FL EFF	Notes	Discount Symbol	List Price
1.5	1800	460	145TC	64	Y154XSSB42A-P	2.4	86.5	1, 9, 16, 18	MTP840	$724
1.5	1800	460	145TC	71	Y154XSSB47A-P	2.4	86.5	1, 9, 18	MTP840	$724
1.5	1800	575	145TC	71	Y154XSSC42A-P	1.9	86.5	1, 16, 18	MTP840	$724
1.5	1800	575	145TC	71	Y154XSSC47A-P	1.9	86.5	1, 18	MTP840	$724
1.5	1200	460	182TC	103	Y156XSSB42A-P	2.5	87.7	1, 9, 16, 18	MTP840	$866
1.5	1200	460	182TC	79	Y156XSSB47A-P	2.5	87.7	1, 9, 18	MTP840	$866
1.5	1200	575	182TC	79	Y156XSSC42A-P	2.0	87.5	1, 16, 18	MTP840	$866
1.5	1200	575	182TC	79	Y156XSSC47A-P	2.0	87.5	1, 18	MTP840	$866
2	3600	460	145TC	64	0022XSSB42A-P	2.6	85.6	1, 9, 16, 18	MTP840	$804
2	3600	460	145TC	64	0022XSSB47A-P	2.6	85.6	1, 9, 18	MTP840	$804
2	3600	575	145TC	68	0022XSSC42A-P	2.1	85.5	1, 16, 18	MTP840	$804
2	3600	575	145TC	68	0022XSSC47A-P	2.1	85.5	1, 18	MTP840	$804
2	1800	460	145TC	66	0024XSSB42A-P	3.0	86.5	1, 9, 16, 18	MTP840	$784
2	1800	460	145TC	75	0024XSSB47A-P	3.0	86.5	1, 9, 18	MTP840	$784
2	1800	575	145TC	73	0024XSSC42A-P	2.4	86.5	1, 16, 18	MTP840	$784
2	1800	575	145TC	68	0024XSSC47A-P	2.4	86.5	1, 18	MTP840	$784
2	1200	460	184TC	126	0026XSSB42A-P	3.4	88.5	1, 9, 16, 18	MTP840	$951
2	1200	460	184TC	126	0026XSSB47A-P	3.4	88.5	1, 9, 18	MTP840	$951
2	1200	575	184TC	126	0026XSSC42A-P	2.7	88.5	1, 16, 18	MTP840	$951
2	1200	575	184TC	126	0026XSSC47A-P	2.7	88.5	1, 18	MTP840	$951
3	3600	460	182TC	104	0032XSSB42A-P	3.7	86.7	1, 9, 16, 18	MTP840	$888
3	3600	460	182TC	99	0032XSSB47A-P	3.7	86.7	1, 9, 18	MTP840	$888
3	3600	575	182TC	112	0032XSSC42A-P	3.0	86.7	1, 16, 18	MTP840	$888
3	3600	575	182TC	99	0032XSSC47A-P	3.0	86.7	1, 18	MTP840	$888
3	1800	460	182TC	112	0034XSSB42A-P	4.0	89.5	1, 9, 16, 18	MTP840	$842
3	1800	460	182TC	115	0034XSSB47A-P	4.0	89.5	1, 9, 18	MTP840	$842
3	1800	575	182TC	111	0034XSSC42A-P	3.2	89.5	1, 16, 18	MTP840	$842
3	1800	575	182TC	111	0034XSSC47A-P	3.2	89.5	1, 18	MTP840	$842
3	1200	460	213TC	183	0036XSSB42A-P	4.4	89.6	1, 9, 16, 18	MTP840	$1,177
3	1200	460	213TC	183	0036XSSB47A-P	4.4	89.6	1, 9, 18	MTP840	$1,177
3	1200	575	213TC	168	0036XSSC42A-P	3.5	89.8	1, 16, 18	MTP840	$1,177
3	1200	575	213TC	168	0036XSSC47A-P	3.5	89.8	1, 18	MTP840	$1,177
5	3600	460	184TC	113	0052XSSB42A-P	5.8	88.7	1, 9, 16, 18	MTP840	$1,068
5	3600	460	184TC	117	0052XSSB47A-P	5.8	88.7	1, 9, 18	MTP840	$1,068
5	3600	575	184TC	125	0052XSSC42A-P	4.6	88.7	1, 16, 18	MTP840	$1,068
5	3600	575	184TC	125	0052XSSC47A-P	4.6	88.7	1, 18	MTP840	$1,068
5	1800	460	184TC	121	0054XSSB42A-P	6.5	89.7	1, 9, 16, 18	MTP840	$961
5	1800	460	184TC	127	0054XSSB47A-P	6.5	89.7	1, 9, 18	MTP840	$961
5	1800	575	184TC	124	0054XSSC42A-P	5.2	89.5	1, 16, 18	MTP840	$961
5	1800	575	184TC	115	0054XSSC47A-P	5.2	89.5	1, 18	MTP840	$961
5	1200	460	215TC	194	0056XSSB42A-P	6.9	89.6	1, 9, 16, 18	MTP840	$1,586
5	1200	460	215TC	194	0056XSSB47A-P	6.9	89.6	1, 9, 18	MTP840	$1,586
5	1200	575	215TC	194	0056XSSC42A-P	5.5	89.6	1, 16, 18	MTP840	$1,586
5	1200	575	215TC	194	0056XSSC47A-P	5.5	89.6	1, 18	MTP840	$1,586
7.5	3600	460	213TC	183	Y752XSSB42A-P	9.0	89.7	1, 9, 16, 18	MTP840	$1,387
7.5	3600	460	213TC	183	Y752XSSB47A-P	9.0	89.7	1, 9, 18	MTP840	$1,387
7.5	3600	575	213TC	209	Y752XSSC42A-P	7.2	89.7	1, 16, 18	MTP840	$1,387
7.5	3600	575	213TC	209	Y752XSSC47A-P	7.2	89.7	1, 18	MTP840	$1,387
7.5	1800	460	213TC	209	Y754XSSB42A-P	9.8	91.8	1, 9, 16, 18	MTP840	$1,381

Totally Enclosed Fan Cooled

EQP Global® 840 C-Face

NEMA Premium® Efficiency

EQP Global® 840

HP	Speed (RPM)	Volts	Frame	Weight (lbs.)	Model Number	FL Amps	Nominal FL EFF	Notes	Discount Symbol	List Price
7.5	1800	460	213TC	203	Y754XSSB47A-P	9.8	91.8	1, 9, 18	MTP840	$1,381
7.5	1800	575	213TC	203	Y754XSSC42A-P	7.8	91.8	1, 16, 18	MTP840	$1,381
7.5	1800	575	213TC	203	Y754XSSC47A-P	7.8	91.8	1, 18	MTP840	$1,381
7.5	1200	460	254TC	295	Y756XSSB42A-P	10.2	91.2	1, 9, 16, 18	MTP840	$2,281
7.5	1200	460	254TC	295	Y756XSSB47A-P	10.2	91.2	1, 9, 18	MTP840	$2,281
7.5	1200	575	254TC	298	Y756XSSC42A-P	8.2	91.1	1, 16, 18	MTP840	$2,281
7.5	1200	575	254TC	298	Y756XSSC47A-P	8.2	91.1	1, 18	MTP840	$2,281
10	3600	460	215TC	201	0102XSSB42A-P	11.8	90.2	1, 9, 16, 18	MTP840	$1,598
10	3600	460	215TC	198	0102XSSB47A-P	11.8	90.2	1, 9, 18	MTP840	$1,598
10	3600	575	215TC	210	0102XSSC42A-P	9.4	91.7	1, 16, 18	MTP840	$1,598
10	3600	575	215TC	210	0102XSSC47A-P	9.4	91.7	1, 18	MTP840	$1,598
10	1800	460	215TC	214	0104XSSB42A-P	13.0	91.8	1, 9, 16, 18	MTP840	$1,593
10	1800	460	215TC	216	0104XSSB47A-P	13.0	91.8	1, 9, 18	MTP840	$1,593
10	1800	575	215TC	214	0104XSSC42A-P	10.4	91.8	1, 16, 18	MTP840	$1,593
10	1800	575	215TC	213	0104XSSC47A-P	10.4	91.8	1, 18	MTP840	$1,593
10	1200	460	256TC	317	0106XSSB42A-P	13.4	91.3	1, 9, 16, 18	MTP840	$2,741
10	1200	460	256TC	317	0106XSSB47A-P	13.4	91.3	1, 9, 18	MTP840	$2,741
10	1200	575	256TC	347	0106XSSC42A-P	10.4	91.8	1, 16, 18	MTP840	$2,741
10	1200	575	256TC	347	0106XSSC47A-P	10.8	91.2	1, 18	MTP840	$2,741
15	3600	460	254TC	320	0152XSSB42A-P	18.0	91.2	1, 9, 16, 18	MTP840	$2,213
15	3600	460	254TC	320	0152XSSB47A-P	18.0	91.2	1, 9, 18	MTP840	$2,213
15	3600	575	254TC	315	0152XSSC42A-P	14.4	91.4	1, 16, 18	MTP840	$2,213
15	3600	575	254TC	315	0152XSSC47A-P	14.4	91.4	1, 18	MTP840	$2,213
15	1800	460	254TC	337	0154XSSB42A-P	19.0	92.6	1, 9, 16, 18	MTP840	$2,133
15	1800	460	254TC	335	0154XSSB47A-P	19.0	92.6	1, 9, 18	MTP840	$2,133
15	1800	575	254TC	331	0154XSSC42A-P	15.2	92.6	1, 16, 18	MTP840	$2,133
15	1800	575	254TC	322	0154XSSC47A-P	15.2	92.6	1, 18	MTP840	$2,133
15	1200	460	284TC	478	0156XSSB42A-P	20	91.9	1, 9, 16, 18	MTP840	$3,731
15	1200	575	284TC	474	0156XSSC42A-P	15.8	91.8	1, 16, 18	MTP840	$3,731
20	3600	460	256TC	333	0202XSSB42A-P	24	91.3	1, 9, 16, 18	MTP840	$2,620
20	3600	460	256TC	333	0202XSSB47A-P	24	91.3	1, 9, 18	MTP840	$2,620
20	3600	575	256TC	393	0202XSSC42A-P	19.2	91.3	1, 16, 18	MTP840	$2,620
20	3600	575	256TC	393	0202XSSC47A-P	19.2	91.3	1, 18	MTP840	$2,620
20	1800	460	256TC	384	0204XSSB42A-P	25.4	93.3	1, 9, 16, 18	MTP840	$2,592
20	1800	460	256TC	375	0204XSSB47A-P	25.4	93.3	1, 9, 18	MTP840	$2,592
20	1800	575	256TC	364	0204XSSC42A-P	20	93.2	1, 16, 18	MTP840	$2,592
20	1800	575	256TC	372	0204XSSC47A-P	20	93.2	1, 18	MTP840	$2,592
20	1200	460	286TC	514	0206XSSB42A-P	25.4	91.7	1, 9, 16, 18	MTP840	$4,314
20	1200	575	286TC	512	0206XSSC42A-P	20	91.9	1, 16, 18	MTP840	$4,314
25	3600	460	284TSC	516	0252XSSB42B-P	29	91.8	1, 9, 18	MTP840	$3,342
25	3600	575	284TSC	455	0252XSSC42B-P	23	91.8	1, 18	MTP840	$3,342
25	1800	460	284TC	538	0254XSSB42A-P	31	93.8	1, 9, 16, 18	MTP840	$3,256
25	1800	575	284TC	553	0254XSSC42A-P	24	93.6	1, 16, 18	MTP840	$3,256
25	1200	460	324TC	668	0256XSSB42A-P	31	93.3	1, 9, 16, 18	MTP840	$5,192
25	1200	575	324TC	668	0256XSSC42A-P	25	93.3	1, 16, 18	MTP840	$5,192
30	3600	460	286TSC	540	0302XSSB42B-P	35	91.9	1, 9, 18	MTP840	$3,977
30	3600	575	286TSC	498	0302XSSC42B-P	28	91.9	1, 18	MTP840	$3,977
30	1800	460	286TC	569	0304XSSB42A-P	36	93.8	1, 9, 16, 18	MTP840	$3,730

Totally Enclosed Fan Cooled

EQP Global® 840 C-Face

NEMA Premium® Efficiency

HP	Speed (RPM)	Volts	Frame	Weight (lbs.)	Model Number	FL Amps	Nominal FL EFF	Notes	Discount Symbol	List Price
30	1800	575	286TC	549	0304XSSC42A-P	29	93.8	1, 16, 18	MTP840	$3,730
30	1200	460	326TC	697	0306XSSB42A-P	37	93.3	1, 9, 16, 18	MTP840	$5,904
30	1200	575	326TC	694	0306XSSC42A-P	30	93.3	1, 16, 18	MTP840	$5,904
40	3600	460	324TSC	692	0402XSSB42B-P	47	92.5	1, 9, 18	MTP840	$4,951
40	3600	575	324TSC	692	0402XSSC42B-P	38	92.5	1, 18	MTP840	$4,951
40	1800	460	324TC	723	0404XSSB42A-P	48	94.1	1, 9, 16, 18	MTP840	$4,776
40	1800	575	324TC	723	0404XSSC42A-P	38	94.1	1, 16, 18	MTP840	$4,776
40	1200	460	364TC	860	0406XSSB42A-P	48	94.1	1, 9, 16, 18	MTP840	$8,155
40	1200	575	364TC	860	0406XSSC42A-P	38	94.1	1, 16, 18	MTP840	$8,155
50	3600	460	326TSC	728	0502XSSB42B-P	58	93.0	1, 9, 18	MTP840	$6,281
50	3600	575	326TSC	728	0502XSSC42B-P	46	93.0	1, 18	MTP840	$6,281
50	1800	460	326TC	758	0504XSSB42A-P	60	94.5	1, 9, 16, 18	MTP840	$5,420
50	1800	575	326TC	758	0504XSSC42A-P	48	94.5	1, 16, 18	MTP840	$5,420
50	1200	460	365TC	897	0506XSSB42A-P	60	94.1	1, 9, 16, 18	MTP840	$9,241
50	1200	575	365TC	888	0506XSSC42A-P	48	94.1	1, 16, 18	MTP840	$9,241
60	3600	460	364TSC	763	0602XSSB42B-P	69	93.6	1, 9, 18	MTP840	$8,435
60	3600	575	364TSC	763	0602XSSC42B-P	55	93.7	1, 18	MTP840	$8,435
60	1800	460	364TC	941	0604XSSB42A-P	69	95.1	1, 9, 16, 18	MTP840	$8,370
60	1800	575	364TC	928	0604XSSC42A-P	55	95.1	1, 16, 18	MTP840	$8,370
75	3600	460	365TSC	944	0752XSSB42B-P	86	93.6	1, 9, 18	MTP840	$10,382
75	3600	575	365TSC	944	0752XSSC42B-P	69	93.8	1, 18	MTP840	$10,382
75	1800	460	365TC	1027	0754XSSB42A-P	85	95.4	1, 9, 16, 18	MTP840	$9,880
75	1800	575	365TC	966	0754XSSC42A-P	69	95.4	1, 16, 18	MTP840	$9,880
C-Face Footless										
0.75	1200	460	143TC	68	3/46XSSB44A-P	1.4	80.0	1, 9, 18	MTP840	$791
0.75	1200	575	143TC	68	3/46XSSC44A-P	1.1	81.5	1, 18	MTP840	$791
1	1800	460	143TC	68	0014XSSB44A-P	1.7	85.5	1, 9, 18	MTP840	$727
1	1800	575	143TC	68	0014XSSC44A-P	1.2	85.6	1, 18	MTP840	$727
1	1200	460	145TC	68	0016XSSB44A-P	1.8	82.9	1, 9, 18	MTP840	$879
1	1200	575	145TC	68	0016XSSC44A-P	1.5	82.9	1, 18	MTP840	$879
1.5	3600	460	143TC	50	Y152XSSB44A-P	2.0	84.3	1, 9, 18	MTP840	$798
1.5	3600	575	143TC	50	Y152XSSC44A-P	1.6	84.3	1, 18	MTP840	$798
1.5	1800	460	145TC	68	Y154XSSB44A-P	2.4	86.5	1, 9, 18	MTP840	$796
1.5	1800	575	145TC	68	Y154XSSC44A-P	1.9	86.5	1, 18	MTP840	$796
1.5	1200	460	182TC	104	Y156XSSB44A-P	2.5	87.7	1, 9, 18	MTP840	$953
1.5	1200	575	182TC	79	Y156XSSC44A-P	2.0	87.5	1, 18	MTP840	$953
2	3600	460	145TC	64	0022XSSB44A-P	2.6	85.6	1, 9, 18	MTP840	$884
2	3600	575	145TC	53	0022XSSC44A-P	2.1	85.5	1, 18	MTP840	$884
2	1800	460	145TC	71	0024XSSB44A-P	3.0	86.5	1, 9, 18	MTP840	$862
2	1800	575	145TC	71	0024XSSC44A-P	2.4	86.5	1, 18	MTP840	$862
2	1200	460	184TC	118	0026XSSB44A-P	3.4	88.5	1, 9, 18	MTP840	$1,046
2	1200	575	184TC	93	0026XSSC44A-P	2.7	88.5	1, 18	MTP840	$1,046
3	3600	460	182TC	90	0032XSSB44A-P	3.7	86.7	1, 9, 18	MTP840	$977
3	3600	575	182TC	90	0032XSSC44A-P	3.0	86.7	1, 18	MTP840	$977
3	1800	460	182TC	112	0034XSSB44A-P	4.0	89.5	1, 9, 18	MTP840	$926
3	1800	575	182TC	112	0034XSSC44A-P	3.2	89.5	1, 18	MTP840	$926
3	1200	460	213TC	142	0036XSSB44A-P	4.4	89.6	1, 9, 18	MTP840	$1,295

Totally Enclosed Fan Cooled

EQP Global® 840 C-Face

NEMA Premium® Efficiency

EQP Global® 840

HP	Speed (RPM)	Volts	Frame	Weight (lbs.)	Model Number	FL Amps	Nominal FL EFF	Notes	Discount Symbol	List Price
3	1200	575	213TC	142	0036XSSC44A-P	3.5	89.8	1, 18	MTP840	$1,295
5	3600	460	184TC	110	0052XSSB44A-P	5.8	88.7	1, 9, 18	MTP840	$1,175
5	3600	575	184TC	110	0052XSSC44A-P	4.6	88.7	1, 18	MTP840	$1,175
5	1800	460	184TC	123	0054XSSB44A-P	6.5	89.7	1, 9, 18	MTP840	$1,057
5	1800	575	184TC	123	0054XSSC44A-P	5.2	89.5	1, 18	MTP840	$1,057
5	1200	460	215TC	192	0056XSSB44A-P	6.9	89.6	1, 9, 18	MTP840	$1,745
5	1200	575	215TC	165	0056XSSC44A-P	5.5	89.6	1, 18	MTP840	$1,745
7.5	3600	460	213TC	179	Y752XSSB44A-P	9.0	89.7	1, 9, 18	MTP840	$1,526
7.5	3600	575	213TC	179	Y752XSSC44A-P	7.2	89.7	1, 18	MTP840	$1,526
7.5	1800	460	213TC	209	Y754XSSB44A-P	9.8	91.8	1, 9, 18	MTP840	$1,519
7.5	1800	575	213TC	209	Y754XSSC44A-P	7.8	91.8	1, 18	MTP840	$1,519
7.5	1200	460	254TC	282	Y756XSSB44A-P	10.2	91.2	1, 9, 18	MTP840	$2,509
7.5	1200	575	254TC	282	Y756XSSC44A-P	8.2	91.1	1, 18	MTP840	$2,509
10	3600	460	215TC	196	0102XSSB44A-P	11.8	90.2	1, 9, 18	MTP840	$1,758
10	3600	575	215TC	196	0102XSSC44A-P	9.4	91.7	1, 18	MTP840	$1,758
10	1800	460	215TC	218	0104XSSB44A-P	13.0	91.8	1, 9, 18	MTP840	$1,752
10	1800	575	215TC	213	0104XSSC44A-P	10.4	91.8	1, 18	MTP840	$1,752
10	1200	460	256TC	304	0106XSSB44A-P	13.4	91.3	1, 9, 18	MTP840	$3,015
10	1200	575	256TC	304	0106XSSC44A-P	10.8	91.2	1, 18	MTP840	$3,015
15	3600	460	254TC	304	0152XSSB44A-P	18.0	91.2	1, 9, 18	MTP840	$2,434
15	3600	575	254TC	304	0152XSSC44A-P	14.4	91.4	1, 18	MTP840	$2,434
15	1800	460	254TC	324	0154XSSB44A-P	19.0	92.6	1, 9, 18	MTP840	$2,346
15	1800	575	254TC	322	0154XSSC44A-P	15.2	92.6	1, 18	MTP840	$2,346
15	1200	460	284TC	454	0156XSSB44A-P	20	91.9	1, 9, 18	MTP840	$4,104
15	1200	575	284TC	454	0156XSSC44A-P	15.8	91.8	1, 18	MTP840	$4,104
20	3600	460	256TC	324	0202XSSB44A-P	24	91.3	1, 9, 18	MTP840	$2,882
20	3600	575	256TC	324	0202XSSC44A-P	19.2	91.3	1, 18	MTP840	$2,882
20	1800	460	256TC	359	0204XSSB44A-P	25.4	93.3	1, 9, 18	MTP840	$2,851
20	1800	575	256TC	359	0204XSSC44A-P	20	93.2	1, 18	MTP840	$2,851
20	1200	460	286TC	489	0206XSSB44A-P	25.4	91.7	1, 9, 18	MTP840	$4,745
20	1200	575	286TC	489	0206XSSC44A-P	20	91.9	1, 18	MTP840	$4,745
25	3600	460	284TSC	496	0252XSSB44B-P	29	91.8	1, 9, 18	MTP840	$3,676
25	3600	575	284TSC	496	0252XSSC44B-P	23	91.8	1, 18	MTP840	$3,676
25	1800	460	284TC	514	0254XSSB44A-P	31	93.8	1, 9, 18	MTP840	$3,419
25	1800	575	284TC	514	0254XSSC44A-P	24	93.6	1, 18	MTP840	$3,419
25	1200	460	324TC	545	0256XSSB44A-P	31	93.3	1, 9, 18	MTP840	$5,711
25	1200	575	324TC	545	0256XSSC44A-P	25	93.3	1, 18	MTP840	$5,711
30	3600	460	286TSC	516	0302XSSB44B-P	35	91.9	1, 9, 18	MTP840	$4,375
30	3600	575	286TSC	516	0302XSSC44B-P	28	91.9	1, 18	MTP840	$4,375
30	1800	460	286TC	534	0304XSSB44A-P	36	93.8	1, 9, 18	MTP840	$3,917
30	1800	575	286TC	534	0304XSSC44A-P	29	93.8	1, 18	MTP840	$3,917
30	1200	460	326TC	571	0306XSSB44A-P	37	93.3	1, 9, 18	MTP840	$6,494
30	1200	575	326TC	571	0306XSSC44A-P	30	93.3	1, 18	MTP840	$6,494
40	3600	460	324TSC	589	0402XSSB44B-P	47	92.5	1, 9, 18	MTP840	$5,446
40	3600	575	324TSC	589	0402XSSC44B-P	38	92.5	1, 18	MTP840	$5,446
40	1800	460	324TC	723	0404XSSB44A-P	48	94.1	1, 9, 18	MTP840	$5,015
40	1800	575	324TC	723	0404XSSC44A-P	38	94.1	1, 18	MTP840	$5,015
40	1200	460	364TC	708	0406XSSB44A-P	48	94.1	1, 9, 18	MTP840	$8,971

Totally Enclosed Fan Cooled

EQP Global® 840 C-Face

NEMA Premium® Efficiency

HP	Speed (RPM)	Volts	Frame	Weight (lbs.)	Model Number	FL Amps	Nominal FL EFF	Notes	Discount Symbol	List Price
40	1200	575	364TC	708	0406XSSC44A-P	38	94.1	1, 18	MTP840	$8,971
50	3600	460	326TSC	624	0502XSSB44B-P	58	93.0	1, 9, 18	MTP840	$6,909
50	3600	575	326TSC	624	0502XSSC44B-P	46	93.0	1, 18	MTP840	$6,909
50	1800	460	326TC	741	0504XSSB44A-P	60	94.5	1, 9, 18	MTP840	$5,744
50	1800	575	326TC	741	0504XSSC44A-P	48	94.5	1, 18	MTP840	$5,744
50	1200	460	365TC	757	0506XSSB44A-P	60	94.1	1, 9, 18	MTP840	$10,165
50	1200	575	365TC	757	0506XSSC44A-P	48	94.1	1, 18	MTP840	$10,165
60	3600	460	364TSC	763	0602XSSB44B-P	69	93.6	1, 9, 18	MTP840	$9,279
60	3600	575	364TSC	763	0602XSSC44B-P	55	93.7	1, 18	MTP840	$9,279
60	1800	460	364TC	911	0604XSSB44A-P	69	95.1	1, 9, 18	MTP840	$8,789
60	1800	575	364TC	796	0604XSSC44A-P	55	95.1	1, 18	MTP840	$8,789
75	3600	460	365TSC	814	0752XSSB44B-P	86	93.6	1, 9, 18	MTP840	$11,420
75	3600	575	365TSC	814	0752XSSC44B-P	69	93.8	1, 18	MTP840	$11,420
75	1800	460	365TC	893	0754XSSB44A-P	85	95.4	1, 9, 18	MTP840	$10,374
75	1800	575	365TC	893	0754XSSC44A-P	69	95.4	1, 18	MTP840	$10,374

FL Amps and FL EFF are average expected design values and not guaranteed.
The weights listed above are estimated.
Please contact Toshiba for information on product availability.
"CF" = Consult Factory

General Purpose TEFC

EQP Global® 841 Motor Series

Toshiba's general purpose, totally enclosed fan cooled, NEMA Premium® efficiency, EQP Global® 841 motor series is Toshiba's next-generation motor product line. The EQP Global® 841 is designed to meet or exceed the competitive demands of the global market, as well as the amended integral horsepower (HP) rule IHMR 2016, while maintaining the high reliability and quality expected from Toshiba.

The EQP Global® 841 specifically addresses the needs of the petrochemical industry, where premium performance and reliability are imperative. Building on over 20 years of success with our EQPIII motor series, the EQP Global® 841 features design enhancements on the rotor, frame, brackets, fan, and bearings.

Our EQP (efficiency, quality, and performance) philosophy extends beyond great products. We provide solutions and Global Supply Chain Management Systems (GSCMS) to meet the evolving needs of our global customers.

Standard Features:

- Totally Enclosed Fan Cooled
- Severe Duty, Petrochemical
- NEMA Premium® Efficiency
- 60 Hz: 460 or 575 V
- Three-Phase
- 1.15 Service Factor
- Footed, C-Face Footed, & C-Face Footless Design
- NEMA Design B
- Class F Insulation; Inverter Duty, Exceeds NEMA MG1 Part 31
- IP56 Protection
- All Cast Iron Construction
- Multi-Mount Capabilities on All Frames (See Appendix B)
- Multiple Drain Provisions for Horizontal & Vertical Mounting
- Oversized 300 Series Bearings
- Labyrinth Seal on All Frames (DE & ODE)
- 100% No-Load Commercial Test & Vibration Test on All Motors
- 4142 High Strength Shaft Steel on all 440 Frames and Larger Roller Bearing Motors
- See Appendix C for ASD and Division 2 Capabilities

Applications:

- Pumps
- Fans
- Compressors
- Conveyors
- Mixers
- Material Handling

Totally Enclosed Fan Cooled

EQP Global® 841

NEMA Premium® Efficiency

CC027B

5 FIVE YEAR WARRANTY

Toshiba's general purpose, totally enclosed fan cooled, NEMA Premium® efficiency, EQP Global® 841 motor series is Toshiba's next-generation motor product line. The EQP Global® 841 is designed to meet or exceed the competitive demands of the global market, as well as the amended integral horsepower (HP) rule IHMR 2016, while maintaining the high reliability and quality expected from Toshiba.

The EQP Global® 841 specifically addresses the needs of the petrochemical industry, where premium performance and reliability are imperative. Building on over 20 years of success with our EQPIII motor series, the EQP Global® 841 features design enhancements on the rotor, frame, brackets, fan, and bearings.

Product Scope:

Horsepower: 0.75 to 400 HP

Speed (60 Hz): 3600, 1800, 1200, or 900 RPM

Volt (60 Hz): 460 or 575 V

Enclosure: Totally Enclosed Fan Cooled

Frame Size*: 143T through B449T

Construction: All Cast Iron

Insulation: Class F Inverter Duty, Exceeds NEMA MG1 Part 31 (Voltage Withstand Capability of 2000 V in 0.1 µs)

* Production modifications not applicable to EQP Global® Motors 140 through 360 Frames (use EQPIII Series base price for these frame sizes).

HP	Speed (RPM)	Volts	Frame	Weight (lbs.)	Model Number	FL Amps	Nominal FL EFF	Notes	Discount Symbol	List Price
0.75	1200	460	143T	64	3/46XDSB41A-P	1.4	80.0	1, 18	MTP841	$829
0.75	1200	575	143T	66	3/46XDSC41A-P	1.1	81.5	1, 18	MTP841	$829
0.75	900	460	145T	66	3/48XDSB41A-P	1.5	75.5	1, 18	MTP841	$1,171
0.75	900	575	145T	66	3/48XDSC41A-P	1.2	75.5	1, 18	MTP841	$1,171
1	1800	460	143T	66	0014XDSB41A-P	1.7	85.5	1, 18	MTP841	$714
1	1800	575	143T	66	0014XDSC41A-P	1.2	85.6	1, 18	MTP841	$714
1	1200	460	145T	66	0016XDSB41A-P	1.8	82.9	1, 18	MTP841	$885
1	1200	575	145T	66	0016XDSC41A-P	1.5	82.9	1, 18	MTP841	$885
1	900	460	182T	104	0018XDSB41A-P	1.9	75.5	1, 18	MTP841	$1,207
1	900	575	182T	106	0018XDSC41A-P	1.6	75.5	1, 18	MTP841	$1,207
1.5	3600	460	143T	62	Y152XDSB41A-P	2.0	84.3	1, 18	MTP841	$764
1.5	3600	575	143T	64	Y152XDSC41A-P	1.6	84.3	1, 18	MTP841	$764
1.5	1800	460	145T	66	Y154XDSB41A-P	2.4	86.5	1, 18	MTP841	$793
1.5	1800	575	145T	64	Y154XDSC41A-P	1.9	86.5	1, 18	MTP841	$793
1.5	1200	460	182T	106	Y156XDSB41A-P	2.5	87.7	1, 18	MTP841	$1,092
1.5	1200	575	182T	108	Y156XDSC41A-P	2.0	87.5	1, 18	MTP841	$1,092
1.5	900	460	184T	126	Y158XDSB41A-P	2.7	78.5	1, 18	MTP841	$1,389
1.5	900	575	184T	103	Y158XDSC41A-P	2.1	78.5	1, 18	MTP841	$1,389
2	3600	460	145T	64	0022XDSB41A-P	2.6	85.6	1, 18	MTP841	$915
2	3600	575	145T	66	0022XDSC41A-P	2.1	85.5	1, 18	MTP841	$915
2	1800	460	145T	68	0024XDSB41A-P	3.0	86.5	1, 18	MTP841	$871
2	1800	575	145T	62	0024XDSC41A-P	2.4	86.5	1, 18	MTP841	$871
2	1200	460	184T	117	0026XDSB41A-P	3.4	88.5	1, 18	MTP841	$1,117

Totally Enclosed Fan Cooled

EQP Global® 841

NEMA Premium® Efficiency

EQP Global® 841

HP	Speed (RPM)	Volts	Frame	Weight (lbs.)	Model Number	FL Amps	Nominal FL EFF	Notes	Discount Symbol	List Price
2	1200	575	184T	119	0026XDSC41A-P	2.7	88.5	1, 18	MTP841	$1,117
2	900	460	213T	174	0028XDSB41A-P	3.4	86.5	1, 18	MTP841	$1,824
2	900	575	213T	172	0028XDSC41A-P	2.7	86.5	1, 18	MTP841	$1,824
3	3600	460	182T	97	0032XDSB41A-P	3.7	86.7	1, 18	MTP841	$1,123
3	3600	575	182T	93	0032XDSC41A-P	3.0	86.7	1, 18	MTP841	$1,123
3	1800	460	182T	108	0034XDSB41A-P	4.0	89.5	1, 18	MTP841	$1,054
3	1800	575	182T	106	0034XDSC41A-P	3.2	89.5	1, 18	MTP841	$1,054
3	1200	460	213T	170	0036XDSB41A-P	4.4	89.6	1, 18	MTP841	$1,364
3	1200	575	213T	172	0036XDSC41A-P	3.5	89.8	1, 18	MTP841	$1,364
3	900	460	215T	176	0038XDSB41A-P	4.7	85.5	1, 18	MTP841	$2,294
3	900	575	215T	187	0038XDSC41A-P	3.8	87.5	1, 18	MTP841	$2,294
5	3600	460	184T	112	0052XDSB41A-P	5.8	88.7	1, 18	MTP841	$1,273
5	3600	575	184T	108	0052XDSC41A-P	4.6	88.7	1, 18	MTP841	$1,273
5	1800	460	184T	117	0054XDSB41A-P	6.5	89.7	1, 18	MTP841	$1,129
5	1800	575	184T	119	0054XDSC41A-P	5.2	89.5	1, 18	MTP841	$1,129
5	1200	460	215T	192	0056XDSB41A-P	6.9	89.6	1, 18	MTP841	$1,964
5	1200	575	215T	187	0056XDSC41A-P	5.5	89.6	1, 18	MTP841	$1,964
5	900	460	254T	264	0058XDSB41A-P	7.4	86.5	1, 18	MTP841	$3,374
5	900	575	254T	264	0058XDSC41A-P	6.0	86.5	1, 18	MTP841	$3,374
7.5	3600	460	213T	181	Y752XDSB41A-P	9.0	89.7	1, 18	MTP841	$1,543
7.5	3600	575	213T	181	Y752XDSC41A-P	7.2	89.7	1, 18	MTP841	$1,543
7.5	1800	460	213T	199	Y754XDSB41A-P	9.8	91.8	1, 18	MTP841	$1,532
7.5	1800	575	213T	190	Y754XDSC41A-P	7.8	91.8	1, 18	MTP841	$1,532
7.5	1200	460	254T	289	Y756XDSB41A-P	10.2	91.2	1, 18	MTP841	$2,553
7.5	1200	575	254T	282	Y756XDSC41A-P	8.2	91.1	1, 18	MTP841	$2,553
7.5	900	460	256T	273	Y758XDSB41A-P	11.3	86.5	1, 18	MTP841	$3,823
7.5	900	575	256T	304	Y758XDSC41A-P	9	89.5	1, 18	MTP841	$3,823
10	3600	460	215T	194	0102XDSB41A-P	11.8	90.2	1, 18	MTP841	$1,801
10	3600	575	215T	196	0102XDSC41A-P	9.4	91.7	1, 18	MTP841	$1,801
10	1800	460	215T	207	0104XDSB41A-P	13.0	91.8	1, 18	MTP841	$1,845
10	1800	575	215T	203	0104XDSC41A-P	10.4	91.8	1, 18	MTP841	$1,845
10	1200	460	256T	310	0106XDSB41A-P	13.4	91.3	1, 18	MTP841	$3,118
10	1200	575	256T	313	0106XDSC41A-P	10.8	91.2	1, 18	MTP841	$3,118
10	900	460	284T	403	0108XDSB41A-P	14.5	89.5	1, 18	MTP841	$4,971
10	900	575	284T	452	0108XDSC41A-P	12.2	90.2	1, 18	MTP841	$4,971
15	3600	460	254T	315	0152XDSB41A-P	18.0	91.2	1, 18	MTP841	$2,478
15	3600	575	254T	311	0152XDSC41A-P	14.4	91.4	1, 18	MTP841	$2,478
15	1800	460	254T	325	0154XDSB41A-P	19.0	92.6	1, 18	MTP841	$2,434
15	1800	575	254T	326	0154XDSC41A-P	15.2	92.6	1, 18	MTP841	$2,434
15	1200	460	284T	452	0156XDSB41A-P	20	91.9	1, 18	MTP841	$4,139
15	1200	575	284T	454	0156XDSC41A-P	15.8	91.8	1, 18	MTP841	$4,139
15	900	460	286T	436	0158XDSB41A-P	22	89.5	1, 18	MTP841	$6,037
15	900	575	286T	487	0158XDSC41A-P	18.5	90.2	1, 18	MTP841	$6,037
20	3600	460	256T	327	0202XDSB41A-P	24	91.3	1, 18	MTP841	$3,065
20	3600	575	256T	328	0202XDSC41A-P	19.2	91.3	1, 18	MTP841	$3,065
20	1800	460	256T	369	0204XDSB41A-P	25.4	93.3	1, 18	MTP841	$3,029
20	1800	575	256T	370	0204XDSC41A-P	20	93.2	1, 18	MTP841	$3,029
20	1200	460	286T	496	0206XDSB41A-P	25	91.8	1, 18	MTP841	$5,043
20	1200	575	286T	500	0206XDSC41A-P	20	91.9	1, 18	MTP841	$5,043

Totally Enclosed Fan Cooled

EQP Global® 841

NEMA Premium® Efficiency

EQP Global® 841

HP	Speed (RPM)	Volts	Frame	Weight (lbs.)	Model Number	FL Amps	Nominal FL EFF	Notes	Discount Symbol	List Price
20	900	460	324T	585	0208XDSB41A-P	28	90.2	1, 18	MTP841	$7,209
20	900	575	324T	655	0208XDSC41A-P	24	94	1, 18	MTP841	$7,209
25	3600	460	284TS	510	0252XDSB41B-P	29	91.8	1, 18	MTP841	$3,779
25	3600	575	284TS	496	0252XDSC41B-P	23	91.8	1, 18	MTP841	$3,779
25	1800	460	284T	529	0254XDSB41A-P	31	93.8	1, 18	MTP841	$3,607
25	1800	575	284T	531	0254XDSC41A-P	24	93.6	1, 18	MTP841	$3,607
25	1800	460	284TS	529	0254XDSB41B-P	31	93.8	1, 18	MTP841	$3,607
25	1800	575	284TS	531	0254XDSC41B-P	24	93.6	1, 18	MTP841	$3,607
25	1200	460	324T	655	0256XDSB41A-P	31	93.3	1, 18	MTP841	$6,112
25	1200	575	324T	650	0256XDSC41A-P	25	93.3	1, 18	MTP841	$6,112
25	900	460	326T	612	0258XDSB41A-P	35	90.2	1, 18	MTP841	$8,397
25	900	575	326T	677	0258XDSC41A-P	28	91	1, 18	MTP841	$8,397
30	3600	460	286TS	529	0302XDSB41B-P	35	91.9	1, 18	MTP841	$4,410
30	3600	575	286TS	534	0302XDSC41B-P	28	91.9	1, 18	MTP841	$4,410
30	1800	460	286T	542	0304XDSB41A-P	36	93.8	1, 18	MTP841	$4,195
30	1800	575	286T	536	0304XDSC41A-P	29	93.8	1, 18	MTP841	$4,195
30	1800	460	286TS	529	0304XDSB41B-P	36	93.8	1, 18	MTP841	$4,195
30	1800	575	286TS	536	0304XDSC41B-P	29	93.8	1, 18	MTP841	$4,195
30	1200	460	326T	677	0306XDSB41A-P	37	93.3	1, 18	MTP841	$7,039
30	1200	575	326T	672	0306XDSC41A-P	30	93.3	1, 18	MTP841	$7,039
30	900	460	364T	836	0308XDSB41A-P	42	91.7	1, 18	MTP841	$11,291
30	900	575	364T	842	0308XDSC41A-P	34	91.7	1, 18	MTP841	$11,291
40	3600	460	324TS	679	0402XDSB41B-P	47	92.5	1, 18	MTP841	$5,800
40	3600	575	324TS	686	0402XDSC41B-P	38	92.5	1, 18	MTP841	$5,800
40	1800	460	324T	701	0404XDSB41A-P	48	94.1	1, 18	MTP841	$5,575
40	1800	575	324T	703	0404XDSC41A-P	38	94.1	1, 18	MTP841	$5,575
40	1800	460	324TS	701	0404XDSB41B-P	48	94.1	1, 18	MTP841	$5,575
40	1800	575	324TS	703	0404XDSC41B-P	38	94.1	1, 18	MTP841	$5,575
40	1200	460	364T	836	0406XDSB41A-P	48	94.1	1, 18	MTP841	$9,542
40	1200	575	364T	842	0406XDSC41A-P	38	94.1	1, 18	MTP841	$9,542
40	900	460	365T	873	0408XDSB41A-P	55	91.7	1, 18	MTP841	$13,020
40	900	575	365T	877	0408XDSC41A-P	44	91.7	1, 18	MTP841	$13,020
50	3600	460	326TS	705	0502XDSB41B-P	58	93.0	1, 18	MTP841	$7,531
50	3600	575	326TS	710	0502XDSC41B-P	46	93.0	1, 18	MTP841	$7,531
50	1800	460	326T	748	0504XDSB41A-P	60	94.5	1, 18	MTP841	$6,845
50	1800	575	326T	765	0504XDSC41A-P	48	94.5	1, 18	MTP841	$6,845
50	1800	460	326TS	743	0504XDSB41B-P	60	94.5	1, 18	MTP841	$6,845
50	1800	575	326TS	765	0504XDSC41B-P	48	94.5	1, 18	MTP841	$6,845
50	1200	460	365T	873	0506XDSB41A-P	60	94.1	1, 18	MTP841	$10,956
50	1200	575	365T	888	0506XDSC41A-P	48	94.1	1, 18	MTP841	$10,956
50	900	460	404T	1300	B0508FLF3BMHJ	79	93.6	18	MXT41G	$22,613
50	900	575	404T	1327	B0508FLF3OMHJ	63	93.6	18	MXT41G	$22,613
60	3600	460	364TS	908	0602XDSB41B-P	69	93.6	1, 18	MTP841	$8,912
60	3600	575	364TS	899	0602XDSC41B-P	55	93.7	1, 18	MTP841	$8,912
60	1800	460	364T	928	0604XDSB41A-P	69	95.1	1, 18	MTP841	$8,837
60	1800	575	364T	916	0604XDSC41A-P	55	95.1	1, 18	MTP841	$8,837
60	1800	460	364TS	917	0604XDSB41B-P	69	95.1	1, 18	MTP841	$8,837
60	1800	575	364TS	916	0604XDSC41B-P	55	95.1	1, 18	MTP841	$8,837
60	1200	460	404T	1320	0606XDSB41A-P	76	94.5	1, 18	MTP841	$13,167

Totally Enclosed Fan Cooled

EQP Global® 841

NEMA Premium® Efficiency

EQP Global® 841

HP	Speed (RPM)	Volts	Frame	Weight (lbs.)	Model Number	FL Amps	Nominal FL EFF	Notes	Discount Symbol	List Price
60	1200	575	404T	1300	0606XDSC41A-P	61	94.5	1, 18	MTP841	$13,167
60	900	460	405T	1495	B0608FLF3BSHJ	98	93.6	18	MXT41G	$25,882
60	900	575	405T	1419	B0608FLF3OSHJ	75	93.6	18	MXT41G	$25,882
75	3600	460	365TS	928	0752XDSB41B-P	86	93.6	1, 18	MTP841	$11,196
75	3600	575	365TS	937	0752XDSC41B-P	69	93.8	1, 18	MTP841	$11,196
75	1800	460	365T	1012	0754XDSB41A-P	85	95.4	1, 18	MTP841	$11,203
75	1800	575	365T	1010	0754XDSC41A-P	69	95.4	1, 18	MTP841	$11,203
75	1800	460	365TS	990	0754XDSB41B-P	85	95.4	1, 18	MTP841	$11,203
75	1800	575	365TS	1010	0754XDSC41B-P	69	95.4	1, 18	MTP841	$11,203
75	1200	460	405T	1456	0756XDSB41A-P	94	94.5	1, 18	MTP841	$14,744
75	1200	575	405T	1456	0756XDSC41A-P	75	94.5	1, 18	MTP841	$14,744
75	900	460	S444T	2063	0758XDSB41A-R	111	94.5	2, 18	MXT41G	$28,157
75	900	460	S444T	1786	0758XDSB41A	92	94.5	18	MXT41G	$28,157
75	900	575	S444T	1786	0758XDSC41A-R	74	94.5	18	MXT41G	$28,157
100	3600	460	405TS	1388	1002XDSB41B-P	114	94.1	1, 18	MTP841	$15,939
100	3600	575	405TS	1388	1002XDSC41B-P	91	94.1	1, 18	MTP841	$15,939
100	1800	460	405T	1367	1004XDSB41A-P	116	95.4	1, 18	MTP841	$14,843
100	1800	575	405T	1367	1004XDSC41A-P	93	95.4	1, 18	MTP841	$14,843
100	1800	460	405T	1367	1004XDSB41A-PR	116	95.4	1, 2, 18	MTP841	$14,843
100	1800	460	405T	1367	1004XDSB41C-PR	93	95.4	1, 2, 18	MTP841	$14,843
100	1800	460	405TS	1367	1004XDSB41B-P	116	95.4	1, 18	MTP841	$14,843
100	1800	575	405TS	1367	1004XDSC41B-P	93	95.4	1, 18	MTP841	$14,843
100	1200	460	444T	2079	B1006FLF4BSHJ01	123	95.5	2, 17, 18	MXT41G	$22,087
100	1200	575	444T	2069	B1006FLF3OSHJ	99	95.0	17, 18	MXT41G	$22,087
100	1200	460	S444T	2102	1006XDSB41A-P	122	95.4	1, 18	MTP841	$21,146
100	1200	460	S444T	2102	1006XDSB41A-PR	122	95.4	1, 18	MTP841	$21,146
100	1200	575	S444T	2102	1006XDSC41A-P	98	95.4	1, 18	MTP841	$21,146
100	1200	575	S444T	2102	1006XDSC41A-PR	98	95.4	1, 18	MTP841	$21,146
100	900	575	S445T	2155	1008XDSC41A-PR	125	93.6	1, 18	MXT41G	$31,046
100	900	460	S445T	2086	1008XDSB41A-R	123	94.5	18	MXT41G	$31,046
100	900	575	S445T	2086	1008XDSC41A-R	98	94.5	18	MXT41G	$31,046
125	3600	460	444TS	1972	B1251FLG3BSHJ	139	95.3	5, 17, 18	MXT41G	$23,755
125	3600	460	444TS	2055	B1253FLG3BSHJ	139	95.3	4, 17, 18	MXT41G	$23,755
125	3600	575	444TS	1972	B1253FLG3OSHJ	111	95.3	4, 17, 18	MXT41G	$23,755
125	3600	460	S444TS	2035	1252XDSB41B-P	137	95	1, 18	MTP841	$25,616
125	3600	575	S444TS	2352	1252XDSC41B-P	110	95	1, 18	MTP841	$25,616
125	1800	575	444T	2026	B1254FLF4OSHJ01	116	95.7	2, 17, 18	MXT41G	$21,434
125	1800	460	S444T	1879	1254XDSB41A-P	142	95.4	1, 18	MTP841	$21,005
125	1800	575	S444T	1879	1254XDSC41A-P	115	95.4	1, 18	MTP841	$21,005
125	1800	460	S444T	1879	1254XDSB41A-PR	142	95.4	1, 2, 18	MTP841	$21,005
125	1800	575	S444T	1879	1254XDSC41A-PR	115	95.4	1, 2, 18	MTP841	$21,005
125	1800	460	S444TS	CF	1254XDSB41B-P	142	95.4	1, 18	MTP841	$21,005
125	1800	575	S444TS	CF	1254XDSC41B-P	115	95.4	1, 18	MTP841	$21,005
125	1200	460	445T	2163	B1256FLF4BSHJ01	156	95.5	2, 17, 18	MXT41G	$26,862
125	1200	575	445T	2149	B1256FLF4OSHJ01	124	95.5	2, 17, 18	MXT41G	$26,862
125	1200	460	S445T	2500	1256XDSB41A-P	155	94.5	1, 18	MTP841	$25,304
125	1200	460	S445T	2500	1256XDSB41A-PR	155	94.5	1, 18	MTP841	$25,304
125	1200	575	S445T	2500	1256XDSC41A-P	124	95.4	1, 18	MTP841	$25,304
125	1200	575	S445T	2500	1256XDSC41A-PR	124	95.4	1, 18	MTP841	$25,304

Totally Enclosed Fan Cooled

EQP Global® 841

NEMA Premium® Efficiency

EQP Global® 841

HP	Speed (RPM)	Volts	Frame	Weight (lbs.)	Model Number	FL Amps	Nominal FL EFF	Notes	Discount Symbol	List Price
125	900	460	S447T	3800	1258XDSB41A	156	95.0	18	MXT41G	$41,727
125	900	575	S447T	3800	1258XDSC41A	CF	95.0	18	MXT41G	$41,727
125	900	460	S447T	CF	1258XDSB41A-R	CF	CF	2, 18	MXT41G	$41,727
125	900	575	S447T	2500	1258XDSC41A-R	123	94.5	2, 18	MXT41G	$41,727
150	3600	460	S445TS	2083	1502XDSB41B-P	166	95	1, 18	MTP841	$27,173
150	3600	575	S445TS	CF	1502XDSC41B-P	133	95	1, 18	MTP841	$27,173
150	1800	575	445T	2208	B1504FLF3OSHJ	140	95.8	17, 18	MXT41G	$24,918
150	1800	460	S445T	CF	1504XDSB41A-P	CF	CF	1, 18	MTP841	$23,682
150	1800	575	S445T	2332	1504XDSC41A-P	135	95.8	1, 18	MTP841	$23,683
150	1800	460	S445T	2020	1504XDSB41A-PR	169	95.8	1, 2, 18	MTP841	$23,682
150	1800	575	S445T	2020	1504XDSC41A-PR	135	95.8	1, 2, 18	MTP841	$23,682
150	1800	460	S445TS	CF	1504XDSB41B-P	169	95.8	1, 18	MTP841	$23,682
150	1800	575	S445TS	CF	1504XDSC41B-P	135	95.8	1, 18	MTP841	$23,682
150	1200	460	447T	2419	B1506FLF4BSHJ01	182	95.8	2, 17, 18	MXT41G	$30,054
150	1200	575	447T	2416	B1506FLF4OSHJ01	145	95.8	2, 17, 18	MXT41G	$30,054
150	1200	460	S447T	2500	1506XDSB41A-P	187	95.8	1, 18	MTP841	$28,859
150	1200	460	S447T	2500	1506XDSB41A-PR	187	95.8	1, 18	MTP841	$28,859
150	1200	575	S447T	2500	1506XDSC41A-P	153	95.8	1, 18	MTP841	$28,859
150	1200	575	S447T	2500	1506XDSC41A-PR	153	95.8	1, 18	MTP841	$28,859
150	900	460	S449T	3800	1508XDSB41A	186	95.0	18	MXT41G	$49,506
150	900	575	S449T	3800	1508XDSC41A	150	95.0	18	MXT41G	$49,506
150	900	460	S449T	2500	1508XDSB41A-R	188	94.1	2, 18	MXT41G	$49,506
150	900	575	S449T	2500	1508XDSC41A-R	150	94.1	2, 18	MXT41G	$49,506
200	3600	575	447TS	2445	B2003FLG3OSHJ	180	96.0	4, 17, 18	MXT41G	$35,052
200	3600	460	S447TS	2301	2002XDSB41B-P	221	95.4	1, 18	MTP841	$33,638
200	3600	575	S447TS	CF	2002XDSC41B-P	177	95.4	1, 18	MTP841	$33,638
200	1800	575	447T	2462	B2004FLF3OSHJ	185	96.2	17, 18	MXT41G	$30,312
200	1800	575	447T	2464	B2004FLF4OSHJ01	185	96.2	2, 17, 18	MXT41G	$30,312
200	1800	460	S447T	CF	2004XDSB41A-P	CF	CF	1, 18	MTP841	$28,466
200	1800	575	S447T	2160	2004XDSC41A-P	185	96.2	1, 18	MTP841	$28,466
200	1800	460	S447T	CF	2004XDSB41A-PR	CF	CF	1, 2, 18	MTP841	$28,466
200	1800	575	S447T	2143	2004XDSC41A-PR	185	96.2	1, 2, 18	MTP841	$28,466
200	1800	460	S447TS	CF	2004XDSB41B-P	CF	CF	1, 18	MTP841	$28,466
200	1800	575	S447TS	CF	2004XDSC41B-P	185	96.2	1, 18	MTP841	$28,466
200	1200	460	N449T	3339	B2006FLF3BSHJL	264	96.2	18	MXT41G	$36,822
200	1200	460	N449T	3388	B2006FLF4BSHJL	245	96.2	2, 18	MXT41G	$36,822
200	1200	575	N449T	3397	B2006FLF4OSHJL	189	96.2	2, 18	MXT41G	$36,822
200	1200	460	S449T	3860	2006XDSB41A	233	95.8	18	MXT41G	$36,822
200	1200	460	S449T	3860	2006XDSB41A-R	233	95.8	18	MXT41G	$36,822
200	1200	575	S449T	3860	2006XDSC41A	186	95.8	18	MXT41G	$36,822
200	1200	575	S449T	3860	2006XDSC41A-R	186	95.8	18	MXT41G	$36,822
200	900	460	S449T	3800	2008XDSB41A	254	94.5	18	MXT41G	$50,831
200	900	575	S449T	3800	2008XDSC41A	201	94.5	18	MXT41G	$50,831
200	900	460	S449T	2500	2008XDSB41A-R	252	94.5	2, 18	MXT41G	$50,831
200	900	575	S449T	2500	2008XDSC41A-R	201	94.5	2, 18	MXT41G	$50,831
250	3600	460	B449TS	4015	2502XDSB41B	273	95.8	18	MXT41G	$52,272
250	3600	575	B449TS	4015	2502XDSC41B	219	95.8	18	MXT41G	$52,272
250	1800	460	S449T	3606	2504XDSB41A	276	96.2	18	MXT41G	$36,423
250	1800	575	S449T	3636	2504XDSC41A	276	96.2	18	MXT41G	$36,423

Totally Enclosed Fan Cooled

EQP Global® 841

NEMA Premium® Efficiency

EQP Global® 841

HP	Speed (RPM)	Volts	Frame	Weight (lbs.)	Model Number	FL Amps	Nominal FL EFF	Notes	Discount Symbol	List Price
250	1800	460	S449T	3800	2504XDSB41A-R	221	96.2	2, 18	MXT41G	$36,423
250	1800	575	S449T	3800	2504XDSC41A-R	220	96.3	2, 18	MXT41G	$36,423
250	1200	460	S449T	3860	2506XDSB41A	295	95.8	18	MXT41G	$43,021
250	1200	460	S449T	3860	2506XDSB41A-R	295	95.8	18	MXT41G	$43,021
250	1200	575	S449T	3860	2506XDSC41A	236	95.8	18	MXT41G	$43,021
250	1200	575	S449T	3860	2506XDSC41A-R	236	95.8	18	MXT41G	$43,021
300	3600	460	N449TS	3800	B3003FLG3BSHJL	328	95.8	4, 13, 18	MXT41G	$52,272
300	3600	460	N449TS	3800	B3001FLG3BSHJL	328	95.8	5, 13, 18	MXT41G	$52,272
300	3600	460	B449TS	4015	3002XDSB41B	326	95.8	18	MXT41G	$52,272
300	3600	575	B449TS	4015	3002XDSC41B	261	95.8	18	MXT41G	$52,272
300	1800	460	S449T	3685	3004XDSB41A	330	96.4	18	MXT41G	$42,197
300	1800	575	S449T	3739	3004XDSC41A	330	96.4	18	MXT41G	$42,197
300	1800	460	S449T	3800	3004XDSB41A-R	265	96.2	2, 18	MXT41G	$42,197
300	1800	575	S449T	3800	3004XDSC41A-R	264	96.4	2, 18	MXT41G	$42,197
300	1200	460	B449T	4060	3006XDSB41A	357	95.8	18	MXT41G	$54,990
300	1200	460	B449T	4060	3006XDSB41A-R	357	95.8	18	MXT41G	$56,640
300	1200	575	B449T	4060	3006XDSC41A	285	95.8	18	MXT41G	$54,990
300	1200	575	B449T	4060	3006XDSC41A-R	285	95.8	18	MXT41G	$56,640
350	3600	460	B449TS	4015	3503XDSB41B	380	95.8	18	MXT41G	$55,623
350	3600	575	B449TS	4015	3503XDSC41B	304	95.8	18	MXT41G	$55,623
350	1800	460	B449T	2500	3504XDSB41A	390	96.2	18	MXT41G	$45,014
350	1800	575	B449T	CF	3504XDSC41A	CF	CF	18	MXT41G	$45,014
350	1800	460	B449T	2500	3504XDSB41A-R	390	96.2	2, 18	MXT41G	$45,014
350	1800	575	B449T	CF	3504XDSC41A-R	CF	CF	2, 18	MXT41G	$45,014
350	1200	460	B449T	4060	3506XDSB41A	420	95.8	18	MXT41G	$58,741
350	1200	460	B449T	4060	3506XDSB41A-R	420	95.8	18	MXT41G	$58,741
350	1200	575	B449T	4060	3506XDSC41A	336	95.8	18	MXT41G	$58,741
350	1200	575	B449T	4060	3506XDSC41A-R	336	95.8	18	MXT41G	$58,741
400	3600	460	B449TS	4060	4003XSSB41B	435	95.8	4, 18	MXT41G	$60,127
400	3600	575	B449TS	4060	4003XSSC41B	348	95.8	4, 18	MXT41G	$60,127
400	1800	460	B449T	2500	4004XDSB41A	471	96.2	18	MXT41G	$48,661
400	1800	575	B449T	2500	4004XDSC41A	376	96.2	18	MXT41G	$48,661
400	1800	460	B449T	2500	4004XDSB41A-R	471	96.2	2, 18	MXT41G	$48,661
400	1800	575	B449T	2500	4004XDSC41A-R	376	96.2	2, 18	MXT41G	$48,661

FL Amps and FL EFF are average expected design values and not guaranteed.
The weights listed above are estimated.
Please contact Toshiba for information on product availability.
"CF" = Consult Factory

Totally Enclosed Fan Cooled

EQP Global® 841 C-Face

NEMA Premium® Efficiency

CC027B

5 FIVE YEAR WARRANTY

EQP Global® 841

Toshiba's general purpose, totally enclosed fan cooled, NEMA Premium® efficiency, EQP Global® 840 C-Face motor series is Toshiba's next-generation motor product line. The EQP Global® 840 C-Face is designed to meet or exceed the competitive demands of the global market, as well as the amended integral horsepower (HP) rule IHMR 2016, while maintaining the high reliability and quality expected from Toshiba.

Available in C-Face Footed and C-Face Footless designs, the EQP Global® 840 C-Face motor specifically addresses the needs of the petrochemical industry, where premium performance and reliability are imperative. Building on over 20 years of success with our EQPIII motor series, this new motor line features design enhancements on the rotor, frame, brackets, fan, and bearings.

Product Scope:

Horsepower: 0.75 to 75 HP

Speed (60 Hz): 3600, 1800, or 1200 RPM

Volt (60 Hz): 460 or 575 V

Enclosure: Totally Enclosed Fan Cooled

Frame Size*: 143TC through 365TC

Construction: All Cast Iron

Insulation: Class F Inverter Duty, Exceeds NEMA MG1 Part 31 (Voltage Withstand Capability of 2000 V in 0.1 µs)

* Production modifications not applicable to EQP Global Motors® 140 through 360 Frames (use EQPIII Series base price for these frame sizes).

HP	Speed (RPM)	Volts	Frame	Weight (lbs.)	Model Number	FL Amps	Nominal FL EFF	Notes	Discount Symbol	List Price
C-Face Footed										
0.75	1200	460	143TC	52	3/46XDSB42A-P	1.4	80.0	1, 16, 18	MTP841	$938
0.75	1200	460	143TC	52	3/46XDSB47A-P	1.4	80.0	1, 18	MTP841	$938
0.75	1200	575	143TC	52	3/46XDSC42A-P	1.1	81.5	1, 16, 18	MTP841	$938
0.75	1200	575	143TC	52	3/46XDSC47A-P	1.1	81.5	1, 18	MTP841	$938
1	1800	460	143TC	68	0014XDSB42A-P	1.7	85.5	1, 16, 18	MTP841	$823
1	1800	460	143TC	71	0014XDSB47A-P	1.7	85.5	1, 18	MTP841	$823
1	1800	575	143TC	62	0014XDSC42A-P	1.2	85.6	1, 16, 18	MTP841	$823
1	1800	575	143TC	62	0014XDSC47A-P	1.2	85.6	1, 18	MTP841	$823
1	1200	460	145TC	71	0016XDSB42A-P	1.8	82.9	1, 16, 18	MTP841	$994
1	1200	460	145TC	73	0016XDSB47A-P	1.8	82.9	1, 18	MTP841	$994
1	1200	575	145TC	73	0016XDSC42A-P	1.5	82.9	1, 16, 18	MTP841	$994
1	1200	575	145TC	73	0016XDSC47A-P	1.5	82.9	1, 18	MTP841	$994
1.5	3600	460	143TC	66	Y152XDSB42A-P	2.0	84.3	1, 16, 18	MTP841	$873
1.5	3600	460	143TC	66	Y152XDSB47A-P	2.0	84.3	1, 18	MTP841	$873
1.5	3600	575	143TC	66	Y152XDSC42A-P	1.6	84.3	1, 16, 18	MTP841	$873
1.5	3600	575	143TC	66	Y152XDSC47A-P	1.6	84.3	1, 18	MTP841	$873
1.5	1800	460	145TC	73	Y154XDSB42A-P	2.4	86.5	1, 16, 18	MTP841	$902
1.5	1800	460	145TC	71	Y154XDSB47A-P	2.4	86.5	1, 18	MTP841	$902
1.5	1800	575	145TC	73	Y154XDSC42A-P	1.9	86.5	1, 16, 18	MTP841	$902
1.5	1800	575	145TC	73	Y154XDSC47A-P	1.9	86.5	1, 18	MTP841	$902
1.5	1200	460	182TC	112	Y156XDSB42A-P	2.5	87.7	1, 16, 18	MTP841	$1,223

Totally Enclosed Fan Cooled

EQP Global® 841 C-Face

NEMA Premium® Efficiency

EQP Global® 841

HP	Speed (RPM)	Volts	Frame	Weight (lbs.)	Model Number	FL Amps	Nominal FL EFF	Notes	Discount Symbol	List Price
1.5	1200	460	182TC	112	Y156XDSB47A-P	2.5	87.7	1, 18	MTP841	$1,223
1.5	1200	575	182TC	112	Y156XDSC42A-P	2.0	87.5	1, 16, 18	MTP841	$1,223
1.5	1200	575	182TC	112	Y156XDSC47A-P	2.0	87.5	1, 18	MTP841	$1,223
2	3600	460	145TC	68	0022XDSB42A-P	2.6	85.6	1, 16, 18	MTP841	$1,024
2	3600	460	145TC	71	0022XDSB47A-P	2.6	85.6	1, 18	MTP841	$1,024
2	3600	575	145TC	75	0022XDSC42A-P	2.1	85.5	1, 16, 18	MTP841	$1,024
2	3600	575	145TC	75	0022XDSC47A-P	2.1	85.5	1, 18	MTP841	$1,024
2	1800	460	145TC	71	0024XDSB42A-P	3.0	86.5	1, 16, 18	MTP841	$980
2	1800	460	145TC	73	0024XDSB47A-P	3.0	86.5	1, 18	MTP841	$980
2	1800	575	145TC	73	0024XDSC42A-P	2.4	86.5	1, 16, 18	MTP841	$980
2	1800	575	145TC	73	0024XDSC47A-P	2.4	86.5	1, 18	MTP841	$980
2	1200	460	184TC	143	0026XDSB42A-P	3.4	88.5	1, 16, 18	MTP841	$1,248
2	1200	460	184TC	126	0026XDSB47A-P	3.4	88.5	1, 18	MTP841	$1,248
2	1200	575	184TC	123	0026XDSC42A-P	2.7	88.5	1, 16, 18	MTP841	$1,248
2	1200	575	184TC	123	0026XDSC47A-P	2.7	88.5	1, 18	MTP841	$1,248
3	3600	460	182TC	95	0032XDSB42A-P	3.7	86.7	1, 16, 18	MTP841	$1,254
3	3600	460	182TC	104	0032XDSB47A-P	3.7	86.7	1, 18	MTP841	$1,254
3	3600	575	182TC	101	0032XDSC42A-P	3.0	86.7	1, 16, 18	MTP841	$1,254
3	3600	575	182TC	101	0032XDSC47A-P	3.0	86.7	1, 18	MTP841	$1,254
3	1800	460	182TC	112	0034XDSB42A-P	4.0	89.5	1, 16, 18	MTP841	$1,185
3	1800	460	182TC	115	0034XDSB47A-P	4.0	89.5	1, 18	MTP841	$1,185
3	1800	575	182TC	112	0034XDSC42A-P	3.2	89.5	1, 16, 18	MTP841	$1,185
3	1800	575	182TC	112	0034XDSC47A-P	3.2	89.5	1, 18	MTP841	$1,185
3	1200	460	213TC	183	0036XDSB42A-P	4.4	89.6	1, 16, 18	MTP841	$1,539
3	1200	460	213TC	183	0036XDSB47A-P	4.4	89.6	1, 18	MTP841	$1,539
3	1200	575	213TC	168	0036XDSC42A-P	3.5	89.8	1, 16, 18	MTP841	$1,539
3	1200	575	213TC	168	0036XDSC47A-P	3.5	89.8	1, 18	MTP841	$1,539
5	3600	460	184TC	115	0052XDSB42A-P	5.8	88.7	1, 16, 18	MTP841	$1,404
5	3600	460	184TC	117	0052XDSB47A-P	5.8	88.7	1, 18	MTP841	$1,404
5	3600	575	184TC	115	0052XDSC42A-P	4.6	88.7	1, 16, 18	MTP841	$1,404
5	3600	575	184TC	115	0052XDSC47A-P	4.6	88.7	1, 18	MTP841	$1,404
5	1800	460	184TC	126	0054XDSB42A-P	6.5	89.7	1, 16, 18	MTP841	$1,260
5	1800	460	184TC	126	0054XDSB47A-P	6.5	89.7	1, 18	MTP841	$1,260
5	1800	575	184TC	121	0054XDSC42A-P	5.2	89.5	1, 16, 18	MTP841	$1,260
5	1800	575	184TC	121	0054XDSC47A-P	5.2	89.5	1, 18	MTP841	$1,260
5	1200	460	215TC	183	0056XDSB42A-P	6.9	89.6	1, 16, 18	MTP841	$2,139
5	1200	460	215TC	201	0056XDSB47A-P	6.9	89.6	1, 18	MTP841	$2,139
5	1200	575	215TC	194	0056XDSC42A-P	5.5	89.6	1, 16, 18	MTP841	$2,139
5	1200	575	215TC	194	0056XDSC47A-P	5.5	89.6	1, 18	MTP841	$2,139
7.5	3600	460	213TC	187	Y752XDSB42A-P	9.0	89.7	1, 16, 18	MTP841	$1,718
7.5	3600	460	213TC	187	Y752XDSB47A-P	9.0	89.7	1, 18	MTP841	$1,718
7.5	3600	575	213TC	209	Y752XDSC42A-P	7.2	89.7	1, 16, 18	MTP841	$1,718
7.5	3600	575	213TC	209	Y752XDSC47A-P	7.2	89.7	1, 18	MTP841	$1,718
7.5	1800	460	213TC	207	Y754XDSB42A-P	9.8	91.8	1, 16, 18	MTP841	$1,707
7.5	1800	460	213TC	209	Y754XDSB47A-P	9.8	91.8	1, 18	MTP841	$1,707
7.5	1800	575	213TC	190	Y754XDSC42A-P	7.8	91.8	1, 16, 18	MTP841	$1,707
7.5	1800	575	213TC	190	Y754XDSC47A-P	7.8	91.8	1, 18	MTP841	$1,707
7.5	1200	460	254TC	298	Y756XDSB42A-P	10.2	91.2	1, 16, 18	MTP841	$2,816

Totally Enclosed Fan Cooled

EQP Global® 841 C-Face

NEMA Premium® Efficiency

HP	Speed (RPM)	Volts	Frame	Weight (lbs.)	Model Number	FL Amps	Nominal FL EFF	Notes	Discount Symbol	List Price
7.5	1200	460	254TC	300	Y756XDSB47A-P	10.2	91.2	1, 18	MTP841	$2,816
7.5	1200	575	254TC	330	Y756XDSC42A-P	8.2	91.1	1, 16, 18	MTP841	$2,816
7.5	1200	575	254TC	330	Y756XDSC47A-P	8.2	91.1	1, 18	MTP841	$2,816
10	3600	460	215TC	205	0102XDSB42A-P	11.8	90.2	1, 16, 18	MTP841	$1,976
10	3600	460	215TC	205	0102XDSB47A-P	11.8	90.2	1, 18	MTP841	$1,976
10	3600	575	215TC	205	0102XDSC42A-P	9.4	91.7	1, 16, 18	MTP841	$1,976
10	3600	575	215TC	205	0102XDSC47A-P	9.4	91.7	1, 18	MTP841	$1,976
10	1800	460	215TC	218	0104XDSB42A-P	13.0	91.8	1, 16, 18	MTP841	$2,020
10	1800	460	215TC	216	0104XDSB47A-P	13.0	91.8	1, 18	MTP841	$2,020
10	1800	575	215TC	218	0104XDSC42A-P	10.4	91.8	1, 16, 18	MTP841	$2,020
10	1800	575	215TC	218	0104XDSC47A-P	10.4	91.8	1, 18	MTP841	$2,020
10	1200	460	256TC	317	0106XDSB42A-P	13.4	91.3	1, 16, 18	MTP841	$3,381
10	1200	460	256TC	320	0106XDSB47A-P	13.4	91.3	1, 18	MTP841	$3,381
10	1200	575	256TC	317	0106XDSC42A-P	10.8	91.2	1, 16, 18	MTP841	$3,381
10	1200	575	256TC	317	0106XDSC47A-P	10.8	91.2	1, 18	MTP841	$3,381
15	3600	460	254TC	324	0152XDSB42A-P	18.0	91.2	1, 16, 18	MTP841	$2,741
15	3600	460	254TC	324	0152XDSB47A-P	18.0	91.2	1, 18	MTP841	$2,741
15	3600	575	254TC	322	0152XDSC42A-P	14.4	91.4	1, 16, 18	MTP841	$2,741
15	3600	575	254TC	322	0152XDSC47A-P	14.4	91.4	1, 18	MTP841	$2,741
15	1800	460	254TC	340	0154XDSB42A-P	19.0	92.6	1, 16, 18	MTP841	$2,697
15	1800	460	254TC	348	0154XDSB47A-P	19.0	92.6	1, 18	MTP841	$2,697
15	1800	575	254TC	335	0154XDSC42A-P	15.2	92.6	1, 16, 18	MTP841	$2,697
15	1800	575	254TC	335	0154XDSC47A-P	15.2	92.6	1, 18	MTP841	$2,697
15	1200	460	284TC	487	0156XDSB42A-P	20	91.9	1, 18	MTP841	$4,577
15	1200	575	284TC	474	0156XDSC42A-P	15.8	91.8	1, 18	MTP841	$4,577
20	3600	460	256TC	333	0202XDSB42A-P	24	91.3	1, 16, 18	MTP841	$3,328
20	3600	460	256TC	340	0202XDSB47A-P	24	91.3	1, 18	MTP841	$3,328
20	3600	575	256TC	333	0202XDSC42A-P	19.2	91.3	1, 16, 18	MTP841	$3,328
20	3600	575	256TC	333	0202XDSC47A-P	19.2	91.3	1, 18	MTP841	$3,328
20	1800	460	256TC	371	0204XDSB42A-P	25.4	93.3	1, 16, 18	MTP841	$3,292
20	1800	460	256TC	377	0204XDSB47A-P	25.4	93.3	1, 18	MTP841	$3,292
20	1800	575	256TC	375	0204XDSC42A-P	20	93.2	1, 16, 18	MTP841	$3,292
20	1800	575	256TC	375	0204XDSC47A-P	20	93.2	1, 18	MTP841	$3,292
20	1200	460	286TC	518	0206XDSB42A-P	25.4	91.7	1, 18	MTP841	$5,481
20	1200	575	286TC	518	0206XDSC42A-P	20	91.9	1, 18	MTP841	$5,481
25	3600	460	284TSC	514	0252XDSB42B-P	29	91.8	1, 18	MTP841	$4,217
25	3600	575	284TSC	455	0252XDSC42B-P	23	91.8	1, 18	MTP841	$4,217
25	1800	460	284TC	540	0254XDSB42A-P	31	93.8	1, 18	MTP841	$4,045
25	1800	575	284TC	534	0254XDSC42A-P	24	93.6	1, 18	MTP841	$4,045
25	1200	460	324TC	679	0256XDSB42A-P	31	93.3	1, 18	MTP841	$6,604
25	1200	575	324TC	666	0256XDSC42A-P	25	93.3	1, 18	MTP841	$6,604
30	3600	460	286TSC	534	0302XDSB42B-P	35	91.9	1, 18	MTP841	$4,848
30	3600	575	286TSC	498	0302XDSC42B-P	28	91.9	1, 18	MTP841	$4,848
30	1800	460	286TC	558	0304XDSB42A-P	36	93.8	1, 18	MTP841	$4,633
30	1800	575	286TC	551	0304XDSC42A-P	29	93.8	1, 18	MTP841	$4,633
30	1200	460	326TC	694	0306XDSB42A-P	37	93.3	1, 18	MTP841	$7,531
30	1200	575	326TC	692	0306XDSC42A-P	30	93.3	1, 18	MTP841	$7,531
40	3600	460	324TSC	690	0402XDSB42B-P	47	92.5	1, 18	MTP841	$6,292

Totally Enclosed Fan Cooled

EQP Global® 841 C-Face

NEMA Premium® Efficiency

EQP Global® 841

HP	Speed (RPM)	Volts	Frame	Weight (lbs.)	Model Number	FL Amps	Nominal FL EFF	Notes	Discount Symbol	List Price
40	3600	575	324TSC	692	0402XDSC42B-P	38	92.5	1, 18	MTP841	$6,292
40	1800	460	324TC	716	0404XDSB42A-P	48	94.1	1, 18	MTP841	$6,067
40	1800	575	324TC	719	0404XDSC42A-P	38	94.1	1, 18	MTP841	$6,067
40	1200	460	364TC	862	0406XDSB42A-P	48	94.1	1, 18	MTP841	$10,362
40	1200	575	364TC	862	0406XDSC42A-P	38	94.1	1, 18	MTP841	$10,362
50	3600	460	326TSC	725	0502XDSB42B-P	58	93.0	1, 18	MTP841	$8,023
50	3600	575	326TSC	717	0502XDSC42B-P	46	93.0	1, 18	MTP841	$8,023
50	1800	460	326TC	767	0504XDSB42A-P	60	94.5	1, 18	MTP841	$7,337
50	1800	575	326TC	769	0504XDSC42A-P	48	94.5	1, 18	MTP841	$7,337
50	1200	460	365TC	895	0506XDSB42A-P	60	94.1	1, 18	MTP841	$11,776
50	1200	575	365TC	895	0506XDSC42A-P	48	94.1	1, 18	MTP841	$11,776
60	3600	460	364TSC	911	0602XDSB42B-P	69	93.6	1, 18	MTP841	$9,732
60	3600	575	364TSC	911	0602XDSC42B-P	55	93.7	1, 18	MTP841	$9,732
60	1800	460	364TC	928	0604XDSB42A-P	69	95.1	1, 18	MTP841	$9,657
60	1800	575	364TC	941	0604XDSC42A-P	55	95.1	1, 18	MTP841	$9,657
75	3600	460	365TSC	941	0752XDSB42B-P	86	93.6	1, 18	MTP841	$12,016
75	3600	575	365TSC	941	0752XDSC42B-P	69	93.8	1, 18	MTP841	$12,016
75	1800	460	365TC	1025	0754XDSB42A-P	85	95.4	1, 18	MTP841	$12,023
75	1800	575	365TC	1020	0754XDSC42A-P	69	95.4	1, 18	MTP841	$12,023
C-Face Footless										
0.75	1200	460	143TC	71	3/46XDSB44A-P	1.4	80.0	1, 18	MTP841	$1,032
0.75	1200	575	143TC	71	3/46XDSC44A-P	1.1	81.5	1, 18	MTP841	$1,032
1	1800	460	143TC	71	0014XDSB44A-P	1.7	85.5	1, 18	MTP841	$905
1	1800	575	143TC	71	0014XDSC44A-P	1.2	85.6	1, 18	MTP841	$905
1	1200	460	145TC	68	0016XDSB44A-P	1.8	82.9	1, 18	MTP841	$1,093
1	1200	575	145TC	68	0016XDSC44A-P	1.5	82.9	1, 18	MTP841	$1,093
1.5	3600	460	143TC	68	Y152XDSB44A-P	2.0	84.3	1, 18	MTP841	$960
1.5	3600	575	143TC	68	Y152XDSC44A-P	1.6	84.3	1, 18	MTP841	$960
1.5	1800	460	145TC	68	Y154XDSB44A-P	2.4	86.5	1, 18	MTP841	$992
1.5	1800	575	145TC	68	Y154XDSC44A-P	1.9	86.5	1, 18	MTP841	$992
1.5	1200	460	182TC	103	Y156XDSB44A-P	2.5	87.7	1, 18	MTP841	$1,345
1.5	1200	575	182TC	79	Y156XDSC44A-P	2.0	87.5	1, 18	MTP841	$1,345
2	3600	460	145TC	64	0022XDSB44A-P	2.6	85.6	1, 18	MTP841	$1,126
2	3600	575	145TC	75	0022XDSC44A-P	2.1	85.5	1, 18	MTP841	$1,126
2	1800	460	145TC	75	0024XDSB44A-P	3.0	86.5	1, 18	MTP841	$1,078
2	1800	575	145TC	73	0024XDSC44A-P	2.4	86.5	1, 18	MTP841	$1,078
2	1200	460	184TC	126	0026XDSB44A-P	3.4	88.5	1, 18	MTP841	$1,373
2	1200	575	184TC	116	0026XDSC44A-P	2.7	88.5	1, 18	MTP841	$1,373
3	3600	460	182TC	97	0032XDSB44A-P	3.7	86.7	1, 18	MTP841	$1,379
3	3600	575	182TC	97	0032XDSC44A-P	3.0	86.7	1, 18	MTP841	$1,379
3	1800	460	182TC	112	0034XDSB44A-P	4.0	89.5	1, 18	MTP841	$1,304
3	1800	575	182TC	112	0034XDSC44A-P	3.2	89.5	1, 18	MTP841	$1,304
3	1200	460	213TC	142	0036XDSB44A-P	4.4	89.6	1, 18	MTP841	$1,693
3	1200	575	213TC	142	0036XDSC44A-P	3.5	89.8	1, 18	MTP841	$1,693
5	3600	460	184TC	110	0052XDSB44A-P	5.8	88.7	1, 18	MTP841	$1,544
5	3600	575	184TC	110	0052XDSC44A-P	4.6	88.7	1, 18	MTP841	$1,544
5	1800	460	184TC	121	0054XDSB44A-P	6.5	89.7	1, 18	MTP841	$1,386

Totally Enclosed Fan Cooled

EQP Global® 841 C-Face

NEMA Premium® Efficiency

EQP Global® 841

HP	Speed (RPM)	Volts	Frame	Weight (lbs.)	Model Number	FL Amps	Nominal FL EFF	Notes	Discount Symbol	List Price
5	1800	575	184TC	121	0054XDSC44A-P	5.2	89.5	1, 18	MTP841	$1,386
5	1200	460	215TC	190	0056XDSB44A-P	6.9	89.6	1, 18	MTP841	$2,353
5	1200	575	215TC	190	0056XDSC44A-P	5.5	89.6	1, 18	MTP841	$2,353
7.5	3600	460	213TC	155	Y752XDSB44A-P	9.0	89.7	1, 18	MTP841	$1,890
7.5	3600	575	213TC	155	Y752XDSC44A-P	7.2	89.7	1, 18	MTP841	$1,890
7.5	1800	460	213TC	203	Y754XDSB44A-P	9.8	91.8	1, 18	MTP841	$1,878
7.5	1800	575	213TC	198	Y754XDSC44A-P	7.8	91.8	1, 18	MTP841	$1,878
7.5	1200	460	254TC	252	Y756XDSB44A-P	10.2	91.2	1, 18	MTP841	$3,098
7.5	1200	575	254TC	252	Y756XDSC44A-P	8.2	91.1	1, 18	MTP841	$3,098
10	3600	460	215TC	205	0102XDSB44A-P	11.8	90.2	1, 18	MTP841	$2,174
10	3600	575	215TC	205	0102XDSC44A-P	9.4	91.7	1, 18	MTP841	$2,174
10	1800	460	215TC	214	0104XDSB44A-P	13.0	91.8	1, 18	MTP841	$2,222
10	1800	575	215TC	214	0104XDSC44A-P	10.4	91.8	1, 18	MTP841	$2,222
10	1200	460	256TC	274	0106XDSB44A-P	13.4	91.3	1, 18	MTP841	$3,719
10	1200	575	256TC	274	0106XDSC44A-P	10.8	91.2	1, 18	MTP841	$3,719
15	3600	460	254TC	313	0152XDSB44A-P	18.0	91.2	1, 18	MTP841	$3,015
15	3600	575	254TC	313	0152XDSC44A-P	14.4	91.4	1, 18	MTP841	$3,015
15	1800	460	254TC	333	0154XDSB44A-P	19.0	92.6	1, 18	MTP841	$2,967
15	1800	575	254TC	1359	0154XDSC44A-P	15.2	92.6	1, 18	MTP841	$2,967
15	1200	460	284TC	454	0156XDSB44A-P	20	91.9	1, 18	MTP841	$5,035
15	1200	575	284TC	454	0156XDSC44A-P	15.8	91.8	1, 18	MTP841	$5,035
20	3600	460	256TC	331	0202XDSB44A-P	24	91.3	1, 18	MTP841	$3,661
20	3600	575	256TC	331	0202XDSC44A-P	19.2	91.3	1, 18	MTP841	$3,661
20	1800	460	256TC	368	0204XDSB44A-P	25.4	93.3	1, 18	MTP841	$3,621
20	1800	575	256TC	364	0204XDSC44A-P	20	93.2	1, 18	MTP841	$3,621
20	1200	460	286TC	489	0206XDSB44A-P	25.4	91.7	1, 18	MTP841	$6,029
20	1200	575	286TC	489	0206XDSC44A-P	20	91.9	1, 18	MTP841	$6,029
25	3600	460	284TSC	496	0252XDSB44B-P	29	91.8	1, 18	MTP841	$4,639
25	3600	575	284TSC	496	0252XDSC44B-P	23	91.8	1, 18	MTP841	$4,639
25	1800	460	284TC	516	0254XDSB44A-P	31	93.8	1, 18	MTP841	$4,247
25	1800	575	284TC	550	0254XDSC44A-P	24	93.6	1, 18	MTP841	$4,247
25	1200	460	324TC	653	0256XDSB44A-P	31	93.3	1, 18	MTP841	$7,264
25	1200	575	324TC	653	0256XDSC44A-P	25	93.3	1, 18	MTP841	$7,264
30	3600	460	286TSC	516	0302XDSB44B-P	35	91.9	1, 18	MTP841	$5,333
30	3600	575	286TSC	516	0302XDSC44B-P	28	91.9	1, 18	MTP841	$5,333
30	1800	460	286TC	531	0304XDSB44A-P	36	93.8	1, 18	MTP841	$4,865
30	1800	575	286TC	551	0304XDSC44A-P	29	93.8	1, 18	MTP841	$4,865
30	1200	460	326TC	571	0306XDSB44A-P	37	93.3	1, 18	MTP841	$8,284
30	1200	575	326TC	571	0306XDSC44A-P	30	93.3	1, 18	MTP841	$8,284
40	3600	460	324TSC	686	0402XDSB44B-P	47	92.5	1, 18	MTP841	$6,921
40	3600	575	324TSC	589	0402XDSC44B-P	38	92.5	1, 18	MTP841	$6,921
40	1800	460	324TC	723	0404XDSB44A-P	48	94.1	1, 18	MTP841	$6,370
40	1800	575	324TC	723	0404XDSC44A-P	38	94.1	1, 18	MTP841	$6,370
40	1200	460	364TC	708	0406XDSB44A-P	48	94.1	1, 18	MTP841	$11,398
40	1200	575	364TC	708	0406XDSC44A-P	38	94.1	1, 18	MTP841	$11,398
50	3600	460	326TSC	701	0502XDSB44B-P	58	93.0	1, 18	MTP841	$8,825
50	3600	575	326TSC	702	0502XDSC44B-P	46	93.0	1, 18	MTP841	$8,825
50	1800	460	326TC	758	0504XDSB44A-P	60	94.5	1, 18	MTP841	$7,704

Totally Enclosed Fan Cooled

EQP Global® 841 C-Face

NEMA Premium® Efficiency

HP	Speed (RPM)	Volts	Frame	Weight (lbs.)	Model Number	FL Amps	Nominal FL EFF	Notes	Discount Symbol	List Price
50	1800	575	326TC	758	0504XDSC44A-P	48	94.5	1, 18	MTP841	$7,704
50	1200	460	365TC	757	0506XDSB44A-P	60	94.1	1, 18	MTP841	$12,954
50	1200	575	365TC	757	0506XDSC44A-P	48	94.1	1, 18	MTP841	$12,954
60	3600	460	364TSC	763	0602XDSB44B-P	69	93.6	1, 18	MTP841	$10,705
60	3600	575	364TSC	763	0602XDSC44B-P	55	93.7	1, 18	MTP841	$10,705
60	1800	460	364TC	796	0604XDSB44A-P	69	95.1	1, 18	MTP841	$10,140
60	1800	575	364TC	796	0604XDSC44A-P	55	95.1	1, 18	MTP841	$10,140
75	3600	460	365TSC	814	0752XDSB44B-P	86	93.6	1, 18	MTP841	$13,218
75	3600	575	365TSC	814	0752XDSC44B-P	69	93.8	1, 18	MTP841	$13,218
75	1800	460	365TC	893	0754XDSB44A-P	85	95.4	1, 18	MTP841	$12,624
75	1800	575	365TC	893	0754XDSC44A-P	69	95.4	1, 18	MTP841	$12,624

FL Amps and FL EFF are average expected design values and not guaranteed.
The weights listed above are estimated.
Please contact Toshiba for information on product availability.
"CF" = Consult Factory

Explosion Proof Motors

Totally Enclosed Fan Cooled

Toshiba's EQP Global® XP explosion proof motors are equipped to contain an explosion that may occur inside a motor, as well as prevent explosive gases and vapors from being released into the environment. Its robust construction meets the UL and CSA listed Hazardous Locations requirements. This product line is designed for use in Class I, Division 1, Group D, and Class II, Division 1, Groups E, F, & G, and carries a temperature code rating of T3C (160˚C). It is ideal for indoor and outdoor use and offers the performance and reliability the motor industry has come to expect from Toshiba, which makes the EQP Global® XP motor the clear choice for your toughest environments and applications.

Standard Features:

- Totally Enclosed Fan Cooled
- Severe Duty
- NEMA Premium® Efficiency
- 60 Hz: 230/460, 460, or 575 V
- Three-Phase
- 60 Hz Design
- 1.15 Service Factor
- NEMA Design B
- Class I, Division 1, Group D, and Class II, Division 1, Groups E, F, & G
- ASD-Turndown Capabilities
  - Frames 143T through 326T 20:1CT, 60:1VT, 1:1.5CHP
  - Frames 364T through N449T 10:1CT, 60:1VT, 1:1.5CHP
- T3C Temperature Code 160°C
- Class F Insulation
- IP56 Protection
- All Cast Iron Construction
- C-Flange Footed and Footless Available
- Non-Sparking Brass Shaft Slingers
- Normally-Closed Thermostats
- Ball Bearing is Available on All Frame Sizes
- Roller Bearing is Available on Frames 444T and Above
- Frames 143T through N449T UL Listed File No. E53559

Applications:

- Petrochemical & Gas
- Grain & Feed Mills
- Pharmaceuticals
- Pumps
- Fans
- Compressors
- Conveyors
- Material Handling
- UL & CSA Listed Hazardous Locations

Totally Enclosed Fan Cooled

EQP Global® XP

NEMA Premium® Efficiency

CC027B

NEMA Premium

3 THREE YEAR WARRANTY

EQP Global® XP

Toshiba's EQP Global® XP explosion proof motors are equipped to contain an explosion that may occur inside a motor, as well as prevent explosive gases and vapors from being released into the environment. Its robust construction meets the UL and CSA listed Hazardous Locations requirements. It is ideal for indoor and outdoor use and offers the performance and reliability the motor industry has come to expect from Toshiba, which makes the EQP Global® XP motor the clear choice for your toughest environments and applications.

Product Scope:

Horsepower: 1 to 1000 HP

Speed (60 Hz): 3600, 1800, 1200, or 900 RPM

Volt (60 Hz): 230/460, 460, or 575 V

Enclosure: Totally Enclosed Fan Cooled

Frame Size: 143T through 6811

Construction: All Cast Iron

Insulation: Class F

HP	Speed (RPM)	Volts	Frame	Weight (lbs.)	Model Number	FL Amps	Nominal FL EFF	Notes	Discount Symbol	List Price
1	1800	230/460	143T	66	0014XPEA41A-P	3.4/1.7	85.5	1, 18	MTPXPP	$840
1	1800	575	143T	66	0014XPEC41A-P	1.3	85.6	1, 18	MTPXPP	$840
1	1200	230/460	145T	70	0016XPEA41A-P	3.6/1.8	82.9	1, 18	MTPXPP	$903
1	1200	575	145T	70	0016XPEC41A-P	1.5	82.9	1, 18	MTPXPP	$903
1.5	3600	230/460	143T	64	Y152XPEA41A-P	4.0/2.0	84.0	1, 18	MTPXPP	$886
1.5	3600	575	143T	64	Y152XPEC41A-P	1.6	84.0	1, 18	MTPXPP	$886
1.5	1800	230/460	145T	68	Y154XPEA41A-P	4.8/2.4	86.5	1, 18	MTPXPP	$910
1.5	1800	575	145T	68	Y154XPEC41A-P	1.9	86.5	1, 18	MTPXPP	$910
1.5	1200	230/460	182T	110	Y156XPEA41A-P	5.0/2.5	87.5	1, 18	MTPXPP	$978
1.5	1200	575	182T	110	Y156XPEC41A-P	2.0	87.5	1, 18	MTPXPP	$978
2	3600	230/460	145T	66	0022XPEA41A-P	5.2/2.6	85.6	1, 18	MTPXPP	$917
2	3600	575	145T	66	0022XPEC41A-P	2.1	85.5	1, 18	MTPXPP	$917
2	1800	230/460	145T	70	0024XPEA41A-P	6.0/3.0	86.5	1, 18	MTPXPP	$916
2	1800	575	145T	70	0024XPEC41A-P	2.4	86.5	1, 18	MTPXPP	$916
2	1200	230/460	184T	123	0026XPEA41A-P	6.8/3.4	88.5	1, 18	MTPXPP	$1,130
2	1200	575	184T	123	0026XPEC41A-P	2.7	88.5	1, 18	MTPXPP	$1,130
3	3600	230/460	182T	101	0032XPEA41A-P	7.4/3.7	86.7	1, 18	MTPXPP	$1,057
3	3600	575	182T	101	0032XPEC41A-P	3.0	86.7	1, 18	MTPXPP	$1,057
3	1800	230/460	182T	110	0034XPEA41A-P	8.0/4.0	89.5	1, 18	MTPXPP	$1,152
3	1800	575	182T	110	0034XPEC41A-P	3.2	89.5	1, 18	MTPXPP	$1,152
3	1200	230/460	213T	196	0036XPEA41A-P	8.8/4.4	89.6	1, 18	MTPXPP	$1,429
3	1200	575	213T	196	0036XPEC41A-P	3.5	89.8	1, 18	MTPXPP	$1,429
5	3600	230/460	184T	114	0052XPEA41A-P	11.6/5.8	88.7	1, 18	MTPXPP	$1,305
5	3600	575	184T	114	0052XPEC41A-P	4.6	88.7	1, 18	MTPXPP	$1,305
5	1800	230/460	184T	114	0054XPEA41A-P	13.0/6.5	89.7	1, 18	MTPXPP	$1,275

Totally Enclosed Fan Cooled

EQP Global® XP

NEMA Premium® Efficiency

HP	Speed (RPM)	Volts	Frame	Weight (lbs.)	Model Number	FL Amps	Nominal FL EFF	Notes	Discount Symbol	List Price
5	1800	575	184T	114	0054XPEC41A-P	5.2	89.5	1, 18	MTPXPP	$1,275
5	1200	230/460	215T	211	0056XPEA41A-P	13.8/6.9	89.6	1, 18	MTPXPP	$1,840
5	1200	575	215T	211	0056XPEC41A-P	5.5	89.6	1, 18	MTPXPP	$1,840
7.5	3600	230/460	213T	205	Y752XPEA41A-P	18.0/9.0	89.5	1, 18	MTPXPP	$1,768
7.5	3600	575	213T	205	Y752XPEC41A-P	7.2	89.5	1, 18	MTPXPP	$1,768
7.5	1800	230/460	213T	224	Y754XPEA41A-P	19.6/9.8	91.7	1, 18	MTPXPP	$1,729
7.5	1800	575	213T	224	Y754XPEC41A-P	7.8	91.7	1, 18	MTPXPP	$1,729
7.5	1200	230/460	254T	315	Y756XPEA41A-P	20.4/10.2	91.0	1, 18	MTPXPP	$2,402
7.5	1200	575	254T	315	Y756XPEC41A-P	8.2	91.0	1, 18	MTPXPP	$2,402
10	3600	230/460	215T	222	0102XPEA41A-P	23.6/11.8	90.2	1, 18	MTPXPP	$1,861
10	3600	575	215T	222	0102XPEC41A-P	9.4	91.7	1, 18	MTPXPP	$1,861
10	1800	230/460	215T	231	0104XPEA41A-P	26.0/13.0	91.8	1, 18	MTPXPP	$2,015
10	1800	575	215T	231	0104XPEC41A-P	10.4	91.8	1, 18	MTPXPP	$2,015
10	1200	230/460	256T	334	0106XPEA41A-P	26.8/13.4	91.3	1, 18	MTPXPP	$2,942
10	1200	575	256T	334	0106XPEC41A-P	10.8	91.2	1, 18	MTPXPP	$2,942
15	3600	230/460	254T	334	0152XPEA41A-P	36/18	91.2	1, 18	MTPXPP	$2,421
15	3600	575	254T	334	0152XPEC41A-P	14.4	91.4	1, 18	MTPXPP	$2,421
15	1800	230/460	254T	352	0154XPEA41A-P	38/19	92.6	1, 18	MTPXPP	$2,782
15	1800	575	254T	352	0154XPEC41A-P	15.2	92.6	1, 18	MTPXPP	$2,782
15	1200	230/460	284T	475	0156XPEA41A-P	40/20	91.9	1, 18	MTPXPP	$4,017
15	1200	575	284T	475	0156XPEC41A-P	15.8	91.8	1, 18	MTPXPP	$4,017
20	3600	230/460	256T	350	0202XPEA41A-P	48/24	91.3	1, 18	MTPXPP	$3,263
20	3600	575	256T	350	0202XPEC41A-P	19.2	91.3	1, 18	MTPXPP	$3,263
20	1800	230/460	256T	396	0204XPEA41A-P	50/25	93.3	1, 18	MTPXPP	$3,261
20	1800	575	256T	396	0204XPEC41A-P	20	93.2	1, 18	MTPXPP	$3,261
20	1200	230/460	286T	519	0206XPEA41A-P	50/25	91.8	1, 18	MTPXPP	$4,553
20	1200	575	286T	519	0206XPEC41A-P	20	91.9	1, 18	MTPXPP	$4,553
25	3600	230/460	284TS	504	0252XPEA41B-P	58/29	91.8	1, 18	MTPXPP	$3,835
25	3600	575	284TS	504	0252XPEC41B-P	23	91.8	1, 18	MTPXPP	$3,835
25	1800	230/460	284T	537	0254XPEA41A-P	62/31	93.8	1, 18	MTPXPP	$4,391
25	1800	575	284T	537	0254XPEC41A-P	24	93.6	1, 18	MTPXPP	$4,391
25	1200	230/460	324T	695	0256XPEA41A-P	62/31	93.3	1, 18	MTPXPP	$5,609
25	1200	575	324T	695	0256XPEC41A-P	25	93.3	1, 18	MTPXPP	$5,609
30	3600	230/460	286TS	506	0302XPEA41B-P	70/35	91.9	1, 18	MTPXPP	$4,528
30	3600	575	286TS	506	0302XPEC41B-P	28	91.9	1, 18	MTPXPP	$4,528
30	1800	230/460	286T	552	0304XPEA41A-P	72/36	93.8	1, 18	MTPXPP	$4,667
30	1800	575	286T	552	0304XPEC41A-P	29	93.8	1, 18	MTPXPP	$4,667
30	1200	230/460	326T	708	0306XPEA41A-P	74/37	93.3	1, 18	MTPXPP	$6,853
30	1200	575	326T	708	0306XPEC41A-P	30	93.3	1, 18	MTPXPP	$6,853
40	3600	230/460	324TS	673	0402XPEA41B-P	94/47	92.5	1, 18	MTPXPP	$6,385
40	3600	575	324TS	673	0402XPEC41B-P	38	92.5	1, 18	MTPXPP	$6,385
40	1800	230/460	324T	739	0404XPEA41A-P	96/48	94.1	1, 18	MTPXPP	$6,635
40	1800	575	324T	739	0404XPEC41A-P	38	94.1	1, 18	MTPXPP	$6,635
40	1200	230/460	364T	869	0406XPEA41A-P	96/48	94.1	1, 18	MTPXPP	$9,011
40	1200	575	364T	869	0406XPEC41A-P	38	94.1	1, 18	MTPXPP	$9,011
50	3600	230/460	326TS	746	0502XPEA41B-P	116/58	93.0	1, 18	MTPXPP	$8,009
50	3600	575	326TS	746	0502XPEC41B-P	46	93.0	1, 18	MTPXPP	$8,009
50	1800	230/460	326T	785	0504XPEA41A-P	120/60	94.5	1, 18	MTPXPP	$7,645

Totally Enclosed Fan Cooled

EQP Global® XP

NEMA Premium® Efficiency

HP	Speed (RPM)	Volts	Frame	Weight (lbs.)	Model Number	FL Amps	Nominal FL EFF	Notes	Discount Symbol	List Price
50	1800	575	326T	785	0504XPEC41A-P	48	94.5	1, 18	MTPXPP	$7,645
50	1200	230/460	365T	911	0506XPEA41A-P	120/60	94.1	1, 18	MTPXPP	$9,097
50	1200	575	365T	911	0506XPEC41A-P	48	94.1	1, 18	MTPXPP	$9,097
60	3600	230/460	364TS	915	0602XPEA41B-P	138/69	93.6	1, 18	MTPXPP	$9,487
60	3600	575	364TS	915	0602XPEC41B-P	55	93.7	1, 18	MTPXPP	$9,487
60	1800	230/460	364T	953	0604XPEA41A-P	138/69	95.1	1, 18	MTPXPP	$9,459
60	1800	575	364T	953	0604XPEC41A-P	55	95.1	1, 18	MTPXPP	$9,459
60	1200	230/460	404T	1526	B0606YLF3USH	148/74	94.5	18	MXTXPP	$22,001
60	1200	575	404T	1526	B0606YLF3OSH	59	94.5	18	MXTXPP	$22,001
75	3600	230/460	365TS	957	0752XPEA41B-P	172/86	93.6	1, 18	MTPXPP	$11,284
75	3600	575	365TS	957	0752XPEC41B-P	69	93.8	1, 18	MTPXPP	$11,284
75	1800	230/460	365T	1034	0754XPEA41A-P	172/86	95.4	1, 18	MTPXPP	$11,086
75	1800	575	365T	1034	0754XPEC41A-P	69	95.4	1, 18	MTPXPP	$11,086
75	1200	230/460	405T	1600	B0756YLF3USH	186/93	94.5	18	MXTXPP	$24,369
75	1200	575	405T	1600	B0756YLF3OSH	74	94.5	18	MXTXPP	$24,369
100	3600	230/460	405TS	1569	B1002YLG3USH	124/112	95.0	18	MXTXPP	$27,483
100	3600	575	405TS	1569	B1002YLG3OSH	90	95.0	18	MXTXPP	$27,483
100	1800	230/460	405T	1572	B1004YLF3USH	132/116	95.4	18	MXTXPP	$25,623
100	1800	575	405T	1572	B1004YLF3OSH	93	95.4	18	MXTXPP	$25,623
100	1200	230/460	444T	2244	B1006YLF4USH	146/123	95.5	2, 18	MXTXPP	$33,871
100	1200	575	444T	2100	B1006YLF4OSH	99	95.5	2, 18	MXTXPP	$33,871
125	3600	230/460	444TS	2100	B1251YLG3USH	286/143	95.1	5, 18	MXTXPP	$34,442
125	3600	230/460	444TS	1831	B1253YLG3USH	286/143	95.1	4, 18	MXTXPP	$34,442
125	3600	575	444TS	1831	B1251YLG3OSH	116	95.2	5, 18	MXTXPP	$34,442
125	3600	575	444TS	1831	B1253YLG3OSH	116	95.2	4, 18	MXTXPP	$34,442
125	1800	230/460	444T	2230	B1254YLF4USH	288/144	95.7	2, 18	MXTXPP	$30,048
125	1800	575	444T	2230	B1254YLF40SH	116	95.8	2, 18	MXTXPP	$30,048
125	1200	230/460	445T	1941	B1256YLF4USH	306/153	95.0	2, 18	MXTXPP	$36,392
125	1200	575	445T	1941	B1256YLF4OSH	122.8	95.0	2, 18	MXTXPP	$36,392
150	3600	230/460	445TS	2115	B1501YLG3USH	350/175	95.7	5, 18	MXTXPP	$40,313
150	3600	230/460	445TS	2115	B1503YLG3USH	350/175	95.7	4, 18	MXTXPP	$40,313
150	3600	575	445TS	2115	B1501YLG3OSH	140	95.7	5, 18	MXTXPP	$40,313
150	3600	575	445TS	2115	B1503YLG3OSH	140	95.7	4, 18	MXTXPP	$40,313
150	1800	230/460	445T	2356	B1504YLF4USH	354/177	95.8	2, 18	MXTXPP	$35,522
150	1800	575	445T	2164	B1504YLF4OMH	142	95.8	2, 18	MXTXPP	$35,522
200	3600	460	447TS	2445	B2001YLG3BSH	218	95.9	5	MXTXPP	$49,194
200	3600	460	447TS	2550	B2003YLG3BSH	218	95.9	4	MXTXPP	$49,194
200	3600	575	447TS	2445	B2001YLG3OSH	176	95.8	5	MXTXPP	$49,194
200	3600	575	447TS	2445	B2003YLG3OSH	176	95.8	4	MXTXPP	$49,194
200	1800	460	447T	2623	B2004YLF4BSH	232	96.2	2	MXTXPP	$41,984
200	1800	575	447T	2626	B2004YLF4OSH	185	96.2	2	MXTXPP	$41,984
200	1200	460	N449T	3728	2006XPEB41A	245	95.8	18	MXTXPP	$45,372
200	1200	460	N449T	3700	2006XPEB41A-R	245	95.8	2, 18	MXTXPP	$46,572
200	1200	575	N449T	3700	2006XPEC41A	198	95.8	18	MXTXPP	$45,372
200	1200	575	N449T	3700	2006XPEC41A-R	198	95.8	2, 18	MXTXPP	$46,572
250	3600	460	N449TS	3500	2503XPEB41B	275	95.8	4, 18	MXTXPP	$55,986
250	3600	575	N449TS	3500	2503XPEC41B	219	95.8	4, 18	MXTXPP	$55,986
250	1800	460	N449T	4022	2504XPEB41A	275	96.2	18	MXTXPP	$48,625

Totally Enclosed Fan Cooled

EQP Global® XP

NEMA Premium® Efficiency

HP	Speed (RPM)	Volts	Frame	Weight (lbs.)	Model Number	FL Amps	Nominal FL EFF	Notes	Discount Symbol	List Price
250	1800	460	N449T	4000	2504XPEB41A-R	275	96.2	2, 18	MXTXPP	$49,875
250	1800	575	N449T	4000	2504XPEC41A	220	96.2	18	MXTXPP	$48,625
250	1800	575	N449T	4000	2504XPEC41A-R	220	96.2	2, 18	MXTXPP	$49,875
250	1200	460	N449T	3937	2506XPEB41A	309	96.0	18	MXTXPP	$51,679
250	1200	460	N449T	4000	2506XPEB41A-R	309	95.8	2, 18	MXTXPP	$52,929
250	1200	460	N449TS	4000	2506XPEB41B	309	95.8	18	MXTXPP	$51,679
250	1200	575	N449T	4000	2506XPEC41A	243	95.8	18	MXTXPP	$51,679
250	1200	575	N449T	4000	2506XPEC41A-R	243	95.8	2, 18	MXTXPP	$52,929
250	1200	575	N449TS	4000	2506XPEC41B	243	95.8	18	MXTXPP	$51,679
250	900	460	509	3325	2508XPEB41E-CM	339	95.0	12	CF	CF
250	900	575	509	3325	2508XPEC41E-CM	271	95.0	12	CF	CF
300	3600	460	N449TS	3900	3003XPEB41B	327	95.8	4, 18	MXTXPP	$62,015
300	3600	575	N449TS	3900	3003XPEC41B	261	95.9	4, 18	MXTXPP	$62,015
300	1800	460	N449T	4058	3004XPEB41A	331	96.2	18	MXTXPP	$51,807
300	1800	460	N449T	4000	3004XPEB41A-R	331	96.2	2, 18	MXTXPP	$53,057
300	1800	575	N449T	4000	3004XPEC41A	265	96.2	18	MXTXPP	$51,807
300	1800	575	N449T	4000	3004XPEC41A-R	265	96.2	2, 18	MXTXPP	$53,057
300	1200	460	N449T	4000	3006XPEB41A	375	95.8	18	MXTXPP	$55,518
300	1200	460	N449T	4000	3006XPEB41A-R	375	95.8	2, 18	MXTXPP	$56,768
300	1200	575	N449T	4000	3006XPEC41A	297	95.8	18	MXTXPP	$55,518
300	1200	575	N449T	4000	3006XPEC41A-R	297	95.8	2, 18	MXTXPP	$56,768
300	900	460	509	3325	3008XPEB41E-CM	393	95.4	12	CF	CF
300	900	575	509	3325	3008XPEC41E-CM	315	95.0	12	CF	CF
350	3600	460	N449T	3900	3503XPEB41B	386	95.8	4, 18	MXTXPP	$64,378
350	3600	575	N449T	3900	3503XPEC41B	311	95.9	4, 18	MXTXPP	$64,378
350	1800	460	N449T	4119	3504XPEB41A	388	96.2	18	MXTXPP	$54,928
350	1800	460	N449T	4082	3504XPEB41A-R	388	96.2	2, 18	MXTXPP	$56,178
350	1800	575	N449T	4000	3504XPEC41A	310	96.2	18	MXTXPP	$54,928
350	1800	575	N449T	4000	3504XPEC41A-R	310	96.2	2, 18	MXTXPP	$56,178
350	1200	460	D509	4000	3506XPEB11E-CM	408	95.8	12	CF	CF
350	1200	575	D509	4000	3506XPEC11E-CM	326	95.8	12	CF	CF
350	900	460	D509	4000	3508XPEB41E-CM	452	95.0	12	CF	CF
350	900	575	D509	4000	3508XPEC41E-CM	361	95.0	12	CF	CF
400	3600	460	H509US	5000	4003XPEB41F-CM	420	95.8	4, 12	CF	CF
400	3600	575	H509US	5000	4003XPEC41F-CM	336	95.8	4, 12	CF	CF
400	1800	460	509	3325	4004XPEB41E-CM	444	96.2	12	CF	CF
400	1800	575	509	3325	4004XPEC41E-CM	355	96.2	12	CF	CF
400	1200	460	D509	4000	4006XPEB41E-CM	465	95.8	12	CF	CF
400	1200	575	D509	4000	4006XPEC41E-CM	372	95.8	12	CF	CF
400	900	460	H509	5000	4008XPEB41E-CM	506	95.0	12	CF	CF
400	900	575	H509	5000	4008XPEC41E-CM	405	95.0	12	CF	CF
450	3600	460	H509US	5000	4503XPEB41F-CM	472	95.8	4, 12	CF	CF
450	3600	575	H509US	5000	4503XPEC41F-CM	377	95.8	4, 12	CF	CF
450	1800	460	D509	4000	4504XPEB41E-CM	499	96.2	12	CF	CF
450	1800	575	D509	4000	4504XPEC41E-CM	399	96.2	12	CF	CF
450	1200	460	H509	5000	4506XPEB41E-CM	520	95.8	12	CF	CF
450	1200	575	H509	5000	4506XPEC41E-CM	416	95.8	12	CF	CF
450	900	460	5811	6900	4508XPEB41E-CM	565	95.0	12	CF	CF

Totally Enclosed Fan Cooled

EQP Global® XP

NEMA Premium® Efficiency

HP	Speed (RPM)	Volts	Frame	Weight (lbs.)	Model Number	FL Amps	Nominal FL EFF	Notes	Discount Symbol	List Price
450	900	575	5811	6900	4508XPEC41E-CM	452	95.0	12	CF	CF
500	3600	460	5810S	6200	5003XPEB41F-CM	524	95.8	4, 12	CF	CF
500	3600	575	5810S	6200	5003XPEC41F-CM	419	95.8	4, 12	CF	CF
500	1800	460	H509	5000	5004XPEB41E-CM	553	96.2	12	CF	CF
500	1800	575	H509	5000	5004XPEC41E-CM	443	96.2	12	CF	CF
500	1200	460	H509	5000	5006XPEB41E-CM	577	95.8	12	CF	CF
500	1200	575	H509	5000	5006XPEC41E-CM	461	95.8	12	CF	CF
500	900	460	688	7000	5008XPEB41E-CM	617	95.0	12	CF	CF
500	900	575	688	7000	5008XPEC41E-CM	493	95.0	12	CF	CF
600	3600	460	5811USS	6900	6003XPEB11F-CM	628	95.4	4, 12	CF	CF
600	3600	575	5811USS	6900	6003XPEC11F-CM	502	95.4	4, 12	CF	CF
600	1800	460	5810	6200	6004XPEB11E-CM	662	95.4	12	CF	CF
600	1800	575	5810	6200	6004XPEC11E-CM	530	95.4	12	CF	CF
600	1200	460	688	7000	6006XPEB11E-CM	688	95.0	12	CF	CF
600	1200	575	688	7000	6006XPEC11E-CM	550	95.0	12	CF	CF
600	900	460	6809	11000	6008XPEB11E-CM	722	94.1	12	CF	CF
600	900	575	6809	11000	6008XPEC11E-CM	578	94.1	12	CF	CF
700	3600	460	6810USS	11500	7003XPEB11F-CM	732	95.4	4, 10, 12	CF	CF
700	3600	575	6810USS	11500	7003XPEC11F-CM	575	95.4	4, 10, 12	CF	CF
700	1800	460	6809	11000	7004XPEB11E-CM	771	95.8	12	CF	CF
700	1800	575	6809	11000	7004XPEC11E-CM	617	95.8	12	CF	CF
700	1200	460	6809	11000	7006XPEB11E-CM	800	95.0	12	CF	CF
700	1200	575	6809	11000	7006XPEC11E-CM	640	95.0	12	CF	CF
700	900	460	6810	11500	7008XPEB11E-CM	826	94.1	12	CF	CF
700	900	575	6810	11500	7008XPEC11E-CM	661	94.1	12	CF	CF
800	3600	460	6811USS	12500	8003XPEB11F-CM	836	95.8	4, 10, 12	CF	CF
800	3600	575	6811USS	12500	8003XPEC11F-CM	669	95.8	4, 10, 12	CF	CF
800	1800	460	6810	11500	8004XPEB11E-CM	880	96.2	12	CF	CF
800	1800	575	6810	11500	8004XPEC11E-CM	704	96.2	12	CF	CF
800	1200	460	6810	11500	8006XPEB11E-CM	913	95.0	12	CF	CF
800	1200	575	6810	11500	8006XPEC11E-CM	730	95.0	12	CF	CF
800	900	460	6811	12500	8008XPEB11E-CM	930	95.4	12	CF	CF
800	900	575	6811	12500	8008XPEC11E-CM	744	95.4	12	CF	CF
900	1800	460	6811	12500	9004XPEB11E-CM	987	96.2	12	CF	CF
900	1800	575	6811	12500	9004XPEC11E-CM	790	96.2	12	CF	CF
900	1200	460	6811	12500	9006XPEB11E-CM	1020	95.0	12	CF	CF
900	1200	575	6811	12500	9006XPEC11E-CM	816	95.0	12	CF	CF
900	900	460	6811	12500	9008XPEB11E-CM	1034	95.4	12	CF	CF
900	900	575	6811	12500	9008XPEC11E-CM	827	95.4	12	CF	CF
1000	1800	460	6811	12500	M204XPEB11E-CM	1096	96.2	12	CF	CF
1000	1800	575	6811	12500	M204XPEC11E-CM	877	96.2	12	CF	CF
1000	1200	460	6811	12500	M206XPEB11E-CM	1130	95.0	12	CF	CF
1000	1200	575	6811	12500	M206XPEC11E-CM	904	95.0	12	CF	CF

FL Amps and FL EFF are average expected design values and not guaranteed.
The weights listed above are estimated.
Please contact Toshiba for information on product availability.
"CF" = Consult Factory

Totally Enclosed Fan Cooled
EQP Global® XP C-Face
NEMA Premium® Efficiency

CC027B

3 THREE YEAR WARRANTY

Toshiba's EQP Global® XP C-Face Footed explosion proof motors are equipped to contain an explosion that may occur inside a motor, as well as prevent explosive gases and vapors from being released into the environment. Its robust construction meets the UL and CSA listed Hazardous Locations requirements. This product line is designed for use in Class I, Division 1, Group D, and Class II, Division 1, Groups E, F, and G and carries a temperature code rating of T3C (160˚C). It is ideal for indoor and outdoor use and offers the performance and reliability the motor industry has come to expect from Toshiba, which makes the EQP Global® XP motor the clear choice for your toughest environments and applications.

Product Scope:*

Horsepower: 1 to 75 HP
Speed (60 Hz): 3600, 1800, or 1200 RPM
Volt (60 Hz): 230/460 or 575 V
Enclosure: Totally Enclosed Fan Cooled
Frame Size: 143TC through 365TC
Construction: All Cast Iron
Insulation: Class F

* Contact Toshiba for additional C-Face capabilities.

HP	Speed (RPM)	Volts	Frame	Weight (lbs.)	Model Number	FL Amps	Nominal FL EFF	Notes	Discount Symbol	List Price
C-Face Footed										
1	1800	230/460	143TC	68	0014XPEA42A-P	3.4/1.7	85.5	1, 16, 18	MTPXPP	$1,081
1	1800	575	143TC	68	0014XPEC42A-P	1.3	85.6	1, 16, 18	MTPXPP	$1,081
1	1200	230/460	145TC	73	0016XPEA42A-P	3.6/1.8	82.9	1, 16, 18	MTPXPP	$1,144
1	1200	575	145TC	73	0016XPEC42A-P	1.5	82.9	1, 16, 18	MTPXPP	$1,144
1.5	3600	230/460	143TC	68	Y152XPEA42A-P	4.0/2.0	84.0	1, 16, 18	MTPXPP	$1,127
1.5	3600	575	143TC	68	Y152XPEC42A-P	1.6	84.0	1, 16, 18	MTPXPP	$1,127
1.5	1800	230/460	145TC	70	Y154XPEA42A-P	4.8/2.4	86.5	1, 16, 18	MTPXPP	$1,151
1.5	1800	575	145TC	70	Y154XPEC42A-P	1.9	86.5	1, 16, 18	MTPXPP	$1,151
1.5	1200	230/460	182TC	112	Y156XPEA42A-P	5.0/2.5	87.7	1, 16, 18	MTPXPP	$1,251
1.5	1200	575	182TC	112	Y156XPEC42A-P	2.0	87.5	1, 16, 18	MTPXPP	$1,251
2	3600	230/460	145TC	70	0022XPEA42A-P	5.2/2.6	85.6	1, 16, 18	MTPXPP	$1,158
2	3600	575	145TC	70	0022XPEC42A-P	2.1	85.5	1, 16, 18	MTPXPP	$1,158
2	1800	230/460	145TC	70	0024XPEA42A-P	6.0/3.0	86.5	1, 16, 18	MTPXPP	$1,157
2	1800	575	145TC	70	0024XPEC42A-P	2.4	86.5	1, 16, 18	MTPXPP	$1,157
2	1200	230/460	184TC	125	0026XPEA42A-P	6.8/3.4	88.5	1, 16, 18	MTPXPP	$1,403
2	1200	575	184TC	125	0026XPEC42A-P	2.7	88.5	1, 16, 18	MTPXPP	$1,403
3	3600	230/460	182TC	106	0032XPEA42A-P	7.4/3.7	86.7	1, 16, 18	MTPXPP	$1,330
3	3600	575	182TC	106	0032XPEC42A-P	3.0	86.7	1, 16, 18	MTPXPP	$1,330
3	1800	230/460	182TC	114	0034XPEA42A-P	8.0/4.0	89.5	1, 16, 18	MTPXPP	$1,425
3	1800	575	182TC	114	0034XPEC42A-P	3.2	89.5	1, 16, 18	MTPXPP	$1,425
3	1200	230/460	213TC	202	0036XPEA42A-P	8.8/4.4	89.6	1, 16, 18	MTPXPP	$1,757
3	1200	575	213TC	202	0036XPEC42A-P	3.5	89.8	1, 16, 18	MTPXPP	$1,757
5	3600	230/460	184TC	117	0052XPEA42A-P	11.6/5.8	88.7	1, 16, 18	MTPXPP	$1,578
5	3600	575	184TC	117	0052XPEC42A-P	4.6	88.7	1, 16, 18	MTPXPP	$1,578
5	1800	230/460	184TC	121	0054XPEA42A-P	13.0/6.5	89.7	1, 16, 18	MTPXPP	$1,548

Totally Enclosed Fan Cooled

EQP Global® XP C-Face

NEMA Premium® Efficiency

HP	Speed (RPM)	Volts	Frame	Weight (lbs.)	Model Number	FL Amps	Nominal FL EFF	Notes	Discount Symbol	List Price
5	1800	575	184TC	121	0054XPEC42A-P	5.2	89.5	1, 16, 18	MTPXPP	$1,548
5	1200	230/460	215TC	218	0056XPEA42A-P	13.8/6.9	89.6	1, 16, 18	MTPXPP	$2,168
5	1200	575	215TC	218	0056XPEC42A-P	5.5	89.6	1, 16, 18	MTPXPP	$2,168
7.5	3600	575	213TC	205	Y752XPEC42A-P	7.2	89.5	1, 16, 18	MTPXPP	$2,096
7.5	3600	230/460	213TC	205	Y752XPEA42A-P	18.0/9.0	89.5	1, 16, 18	MTPXPP	$2,096
7.5	1800	230/460	213TC	227	Y754XPEA42A-P	19.6/9.8	91.7	1, 16, 18	MTPXPP	$2,057
7.5	1800	575	213TC	227	Y754XPEC42A-P	7.8	91.7	1, 16, 18	MTPXPP	$2,057
7.5	1200	230/460	254TC	321	Y756XPEA42A-P	20.4/10.2	91.0	1, 16, 18	MTPXPP	$2,840
7.5	1200	575	254TC	321	Y756XPEC42A-P	8.2	91.0	1, 16, 18	MTPXPP	$2,840
10	3600	230/460	215TC	222	0102XPEA42A-P	23.6/11.8	90.2	1, 16, 18	MTPXPP	$2,189
10	3600	575	215TC	222	0102XPEC42A-P	9.4	91.7	1, 16, 18	MTPXPP	$2,189
10	1800	230/460	215TC	238	0104XPEA42A-P	26/13	91.8	1, 16, 18	MTPXPP	$2,343
10	1800	575	215TC	238	0104XPEC42A-P	10.4	91.8	1, 16, 18	MTPXPP	$2,343
10	1200	230/460	256TC	341	0106XPEA42A-P	26.8/13.4	91.3	1, 16, 18	MTPXPP	$3,380
10	1200	575	256TC	341	0106XPEC42A-P	10.8	91.0	1, 16, 18	MTPXPP	$3,380
15	3600	230/460	254TC	334	0152XPEA42A-P	36/18	91.2	1, 16, 18	MTPXPP	$2,859
15	3600	575	254TC	334	0152XPEC42A-P	14.4	91.4	1, 16, 18	MTPXPP	$2,859
15	1800	230/460	254TC	359	0154XPEA42A-P	38/19	92.6	1, 16, 18	MTPXPP	$3,220
15	1800	575	254TC	359	0154XPEC42A-P	15.2	92.6	1, 16, 18	MTPXPP	$3,220
15	1200	230/460	284TC	480	0156XPEA42A-P	40/20	91.9	1, 18	MTPXPP	$4,783
15	1200	575	284TC	480	0156XPEC42A-P	15.8	91.8	1, 18	MTPXPP	$4,783
20	3600	230/460	256TC	356	0202XPEA42A-P	48/24	91.3	1, 16, 18	MTPXPP	$3,701
20	3600	575	256TC	356	0202XPEC42A-P	19.2	91.3	1, 16, 18	MTPXPP	$3,701
20	1800	230/460	256TC	398	0204XPEA42A-P	50/25	93.3	1, 16, 18	MTPXPP	$3,699
20	1800	575	256TC	398	0204XPEC42A-P	20	93.2	1, 16, 18	MTPXPP	$3,699
20	1200	230/460	286TC	519	0206XPEA42A-P	50/25	91.8	1, 18	MTPXPP	$5,319
20	1200	575	286TC	519	0206XPEC42A-P	20	91.9	1, 18	MTPXPP	$5,319
25	3600	230/460	284TSC	508	0252XPEA42B-P	58/29	91.7	1, 18	MTPXPP	$4,601
25	3600	575	284TSC	508	0252XPEC42B-P	91.7	91.7	1, 18	MTPXPP	$4,601
25	1800	230/460	284TC	532	0254XPEA42A-P	62/31	93.8	1, 18	MTPXPP	$5,157
25	1800	575	284TC	532	0254XPEC42A-P	24	93.6	1, 18	MTPXPP	$5,157
25	1200	230/460	324TC	706	0256XPEA42A-P	62/31	93.3	1, 18	MTPXPP	$6,484
25	1200	575	324TC	706	0256XPEC42A-P	25	93.3	1, 18	MTPXPP	$6,484
30	3600	230/460	286TSC	521	0302XPEA42B-P	70/35	91.9	1, 18	MTPXPP	$5,294
30	3600	575	286TSC	521	0302XPEC42B-P	28	91.7	1, 18	MTPXPP	$5,294
30	1800	230/460	286TC	559	0304XPEA42A-P	72/36	93.8	1, 18	MTPXPP	$5,433
30	1800	575	286TC	559	0304XPEC42A-P	29	93.8	1, 18	MTPXPP	$5,433
30	1200	230/460	326TC	722	0306XPEA42A-P	74/37	93.3	1, 18	MTPXPP	$7,728
30	1200	575	326TC	722	0306XPEC42A-P	30	93.3	1, 18	MTPXPP	$7,728
40	3600	230/460	324TSC	733	0402XPEA42B-P	94/47	92.5	1, 18	MTPXPP	$7,260
40	3600	575	324TSC	733	0402XPEC42B-P	37.6	92.4	1, 18	MTPXPP	$7,260
40	1800	230/460	324TC	757	0404XPEA42A-P	96/48	94.1	1, 18	MTPXPP	$7,510
40	1800	575	324TC	757	0404XPEC42A-P	38	94.1	1, 18	MTPXPP	$7,510
40	1200	230/460	364TC	889	0406XPEA42A-P	96/48	94.1	1, 18	MTPXPP	$9,995
40	1200	575	364TC	889	0406XPEC42A-P	38	94.1	1, 18	MTPXPP	$9,995
50	3600	230/460	326TSC	761	0502XPEA42B-P	116/58	93.0	1, 18	MTPXPP	$8,884
50	3600	575	326TSC	761	0502XPEC42B-P	46.4	93.0	1, 18	MTPXPP	$8,884
50	1800	230/460	326TC	792	0504XPEA42A-P	120/60	94.5	1, 18	MTPXPP	$8,520

Totally Enclosed Fan Cooled

EQP Global® XP C-Face

NEMA Premium® Efficiency

HP	Speed (RPM)	Volts	Frame	Weight (lbs.)	Model Number	FL Amps	Nominal FL EFF	Notes	Discount Symbol	List Price
50	1800	575	326TC	792	0504XPEC42A-P	48	94.5	1, 18	MTPXPP	$8,520
50	1200	230/460	365TC	931	0506XPEA42A-P	120/60	94.1	1, 18	MTPXPP	$10,081
50	1200	575	365TC	931	0506XPEC42A-P	48	94.1	1, 18	MTPXPP	$10,081
60	3600	230/460	364TSC	942	0602XPEA42B-P	138/69	93.6	1, 18	MTPXPP	$10,471
60	3600	575	364TSC	942	0602XPEC42B-P	55	93.7	1, 18	MTPXPP	$10,471
60	1800	230/460	364TC	975	0604XPEA42A-P	138/69	95.1	1, 18	MTPXPP	$10,443
60	1800	575	364TC	975	0604XPEC42A-P	55	95.1	1, 18	MTPXPP	$10,443
75	3600	230/460	365TSC	984	0752XPEA42B-P	172/86	93.6	1, 18	MTPXPP	$12,268
75	3600	575	365TSC	984	0752XPEC42B-P	69	93.8	1, 18	MTPXPP	$12,268
75	1800	230/460	365TC	1052	0754XPEA42A-P	169.2/84.6	95.4	1, 18	MTPXPP	$12,070
75	1800	575	365TC	1052	0754XPEC42A-P	69	95.4	1, 18	MTPXPP	$12,070
C-Face Footless										
1	1800	230/460	143TC	70	0014XPEA44A-P	3.4/1.7	85.5	1	MTPXPP	$1,081
1	1800	575	143TC	70	0014XPEC44A-P	1.3	85.6	1	MTPXPP	$1,081
1	1200	230/460	145TC	73	0016XPEA44A-P	3.6/1.8	82.9	1	MTPXPP	$1,144
1	1200	575	145TC	73	0016XPEC44A-P	1.5	82.9	1	MTPXPP	$1,144
1.5	3600	230/460	143TC	68	Y152XPEA44A-P	4.0/2.0	84.0	1	MTPXPP	$1,127
1.5	3600	575	143TC	68	Y152XPEC44A-P	1.6	84.0	1	MTPXPP	$1,127
1.5	1800	230/460	145TC	70	Y154XPEA44A-P	4.8/2.4	86.5	1	MTPXPP	$1,151
1.5	1800	575	145TC	70	Y154XPEC44A-P	1.9	86.5	1	MTPXPP	$1,151
1.5	1200	230/460	182TC	112	Y156XPEA44A-P	5.0/2.5	87.7	1	MTPXPP	$1,251
1.5	1200	575	182TC	112	Y156XPEC44A-P	2.0	87.5	1	MTPXPP	$1,251
2	3600	230/460	145TC	70	0022XPEA44A-P	5.2/2.6	85.6	1	MTPXPP	$1,158
2	3600	575	145TC	70	0022XPEC44A-P	2.1	85.5	1	MTPXPP	$1,158
2	1800	230/460	145TC	70	0024XPEA44A-P	6.0/3.0	86.5	1	MTPXPP	$1,157
2	1800	575	145TC	70	0024XPEC44A-P	2.4	86.5	1	MTPXPP	$1,157
2	1200	230/460	184TC	125	0026XPEA44A-P	6.8/3.4	88.5	1	MTPXPP	$1,403
2	1200	575	184TC	125	0026XPEC44A-P	2.7	88.5	1	MTPXPP	$1,403
3	3600	230/460	182TC	106	0032XPEA44A-P	7.4/3.7	86.7	1	MTPXPP	$1,330
3	3600	575	182TC	106	0032XPEC44A-P	3.0	86.7	1	MTPXPP	$1,330
3	1800	230/460	182TC	114	0034XPEA44A-P	8.0/4.0	89.5	1	MTPXPP	$1,425
3	1800	575	182TC	114	0034XPEC44A-P	3.2	89.5	1	MTPXPP	$1,425
3	1200	230/460	213TC	202	0036XPEA44A-P	8.8/4.4	89.6	1	MTPXPP	$1,757
3	1200	575	213TC	202	0036XPEC44A-P	3.5	89.8	1	MTPXPP	$1,757
5	3600	230/460	184TC	117	0052XPEA44A-P	11.6/5.8	88.7	1	MTPXPP	$1,578
5	3600	575	184TC	117	0052XPEC44A-P	4.6	88.7	1	MTPXPP	$1,578
5	1800	230/460	184TC	121	0054XPEA44A-P	13.0/6.5	89.7	1	MTPXPP	$1,548
5	1800	575	184TC	121	0054XPEC44A-P	5.2	89.5	1	MTPXPP	$1,548
5	1200	230/460	215TC	218	0056XPEA44A-P	13.8/6.9	89.6	1	MTPXPP	$2,168
5	1200	575	215TC	218	0056XPEC44A-P	5.5	89.6	1	MTPXPP	$2,168
7.5	3600	230/460	213TC	205	Y752XPEA44A-P	18.0/9.0	89.5	1	MTPXPP	$2,096
7.5	3600	575	213TC	205	Y752XPEC44A-P	7.2	89.5	1	MTPXPP	$2,096
7.5	1800	230/460	213TC	227	Y754XPEA44A-P	19.6/9.8	91.7	1	MTPXPP	$2,057
7.5	1800	575	213TC	227	Y754XPEC44A-P	7.8	91.7	1	MTPXPP	$2,057
7.5	1200	230/460	254TC	321	Y756XPEA44A-P	20.4/10.2	91.0	1	MTPXPP	$2,840
7.5	1200	575	254TC	321	Y756XPEC44A-P	8.2	91.0	1	MTPXPP	$2,840
10	3600	230/460	215TC	222	0102XPEA44A-P	23.6/11.8	90.2	1	MTPXPP	$2,189

Totally Enclosed Fan Cooled

EQP Global® XP C-Face

NEMA Premium® Efficiency

HP	Speed (RPM)	Volts	Frame	Weight (lbs.)	Model Number	FL Amps	Nominal FL EFF	Notes	Discount Symbol	List Price
10	3600	575	215TC	222	0102XPEC44A-P	9.4	91.7	1	MTPXPP	$2,189
10	1800	230/460	215TC	238	0104XPEA44A-P	26/13	91.8	1	MTPXPP	$2,343
10	1800	575	215TC	238	0104XPEC44A-P	10.4	91.8	1	MTPXPP	$2,343
10	1200	230/460	256TC	341	0106XPEA44A-P	26.8/13.4	91.3	1	MTPXPP	$3,380
10	1200	575	256TC	341	0106XPEC44A-P	10.8	91.0	1	MTPXPP	$3,380
15	3600	230/460	254TC	334	0152XPEA44A-P	36/18	91.2	1	MTPXPP	$2,859
15	3600	575	254TC	334	0152XPEC44A-P	14.4	91.4	1	MTPXPP	$2,859
15	1800	230/460	254TC	359	0154XPEA44A-P	38/19	92.6	1	MTPXPP	$3,220
15	1800	575	254TC	359	0154XPEC44A-P	15.2	92.6	1	MTPXPP	$3,220
20	3600	230/460	256TC	356	0202XPEA44A-P	48/24	91.3	1	MTPXPP	$3,701
20	3600	575	256TC	356	0202XPEC44A-P	19.2	91.3	1	MTPXPP	$3,701
20	1800	230/460	256TC	398	0204XPEA44A-P	50/25	93.3	1	MTPXPP	$3,699
20	1800	575	256TC	398	0204XPEC44A-P	20	93.2	1	MTPXPP	$3,699

FL Amps and FL EFF are average expected design values and not guaranteed.
The weights listed above are estimated.
Please contact Toshiba for information on product availability.
"CF" = Consult Factory

IEC Motors

Totally Enclosed Fan Cooled

NEW PRODUCT

Toshiba is proud to introduce the new EQP Global® IEC motor product line. This cutting-edge motor product line is designed to meet or exceed the competitive demands of the global market, as well as the requirements of IEC 60034, while maintaining the high reliability and quality expected from Toshiba.

Standard Features:

- Totally Enclosed Fan Cooled (IC411)
- Severe Duty
- IE3 Efficiency Levels per IEC 60034-30-1
- Meets or Exceeds Global Standard Specifications including IEC60034, 60072, 60204, & 60038 (Where Applicable)
- 50 Hz: 230/400, 240/415, 220/380, or 400, 415, 380 V
- 60 Hz: 460 V
- Three-Phase
- IP55 Protection
- Dual Frequency 50/60 Hz Design
- Aluminum Fin Type (90-160 Frame)
- Cast Iron (80, 180-225 Frame)
- Aluminum Frame with Removable Base for 90 through 160 Frames
- Available Interchangeable Flange Options (B5/B35 and B14/34)
- Multi-Mount on Select Frames
- Non-NAFTA Qualified

Applications:

- Pumps
- Fans
- Conveyors
- Compressors
- Centirfuges
- Mixers

Totally Enclosed Fan Cooled
EQP Global® IEC Motors
IE3 Efficiency

CC027B

3 THREE YEAR WARRANTY

This cutting-edge motor product line is designed to meet or exceed the competitive demands of the global market, as well as the requirements of the IEC 60034, while maintaining the high reliability and quality expected from Toshiba.

The EQP Global IEC motor series is designed for severe duty applications. Building on over 20 years of success with the EQPIII motor series, the EQP Global IEC features multiple new design enhancements that make it one of the lowest cost-of-ownership products in the industry.

The EQP philosophy extends beyond great products. Toshiba provides solutions and Global Supply Chain Management Systems (GSCMS) to meet the evolving needs of global customers.

Product Scope:

Power:	0.75 to 45 kW
Speed:	
(50 Hz)*	3000, 1500, or 1000 RPM
(60 Hz):	3600, 1800, or 1200 RPM
Volt:	
(50 Hz)*	230/400, 240/415, 220/380, or 400, 415, 380 V
(60 Hz):	460 V
Enclosure:	Totally Enclosed Fan Cooled (IC411)
Frame Size:	80M through 225S
Construction:	Aluminum Fin Type (90-160 Frame) Cast Iron (80, 180-225 Frame)
Insulation:	Class F, Exceeds IEC 60034-25 (Inverter Duty) (Voltage Withstand Capability of 2000 V in 0.1 µs)
Environment:	Suitable for Indoor or Outdoor Use in Severe Duty Applications

*50/60 Hz Listed on Nameplate on .75 through 45 kw

KW	Speed (RPM)	Volts	Frame	Weight (kg)	Model Number	FL Amps	Nominal FL EFF	Notes	Discount Symbol	List Price
Footed (B3)										
0.75	3600	230/400	80M	16	X752SDMV7FS-P	2.7/1.6	80.7	1, 9	MTPIEC	$493
0.75	1800	230/400	80M	20	X754SDMV7FS-P	3.3/1.9	82.5	1, 9	MTPIEC	$507
0.75	1200	230/400	90L	19.5	X756SDMV7FS-PL	3.5/2	78.9	1, 9	MTPIEC	$580
1.1	3600	230/400	80M	72	Y112SDMV7FS-P	3.8/2.2	82.7	1, 9	MTPIEC	$550
1.1	1800	230/400	90L	21	Y114SDMV7FS-PL	4.3/2.5	84.1	1, 9	MTPIEC	$536
1.1	1200	230/400	90L	28	Y116SDMV7FS-PL	5.2/3	81.0	1, 9	MTPIEC	$677
1.5	3600	230/400	90L	20	Y152SDMV7FS-PL	5.2/3	84.2	1, 9	MTPIEC	$578
1.5	1800	230/400	90L	21	Y154SDMV7FS-PL	5.9/3.4	85.3	1, 9	MTPIEC	$609
1.5	1200	230/400	100L	32	Y156SDMV7FS-PL	6.9/4	82.5	1, 9	MTPIEC	$784
2.2	3600	230/400	90L	22.8	Y222SDMV7FS-PL	7.5/4.3	85.9	1, 9	MTPIEC	$712
2.2	1800	230/400	100L	30	Y224SDMV7FS-PL	9.2/5.3	86.7	1, 9	MTPIEC	$700
2.2	1200	230/400	112M	46	Y226SDMV7FS-PL	9.0/5.2	84.3	1, 9	MTPIEC	$997
3	3600	230/400	100L	28	0032SDMV7FS-PL	9.7/5.6	87.1	1, 9	MTPIEC	$797
3	1800	230/400	100L	30	0034SDMV7FS-PL	12.0/6.9	87.7	1, 9	MTPIEC	$768

Totally Enclosed Fan Cooled
EQP Global® IEC Motors
IE3 Efficiency

KW	Speed (RPM)	Volts	Frame	Weight (kg)	Model Number	FL Amps	Nominal FL EFF	Notes	Discount Symbol	List Price
3	1200	230/400	132S	55	0036SDMV7FS-PL	11.7/6.8	85.6	1, 9	MTPIEC	$1,231
4	3600	230/400	112M	34	0042SDMV7FS-PL	12.5/7.2	88.1	1, 9	MTPIEC	$882
4	1800	230/400	112M	42	0044SDMV7FS-PL	14.9/8.6	88.6	1, 9	MTPIEC	$835
4	1200	230/400	132M	62	0046SDMV7FS-PL	15.3/8.8	86.8	1, 9	MTPIEC	$1,465
5.5	3600	230/400	132S	53	Y552SDMV7FS-PL	18.0/10.4	89.2	1, 9	MTPIEC	$1,143
5.5	1800	230/400	132S	62	Y554SDMV7FS-PL	20.4/11.8	89.6	1, 9	MTPIEC	$1,143
5.5	1200	230/400	132M	75	Y556SDMV7FS-PL	20.4/11.8	88.0	1, 9	MTPIEC	$1,945
7.5	3600	230/400	132M	61	Y752SDMV7FS-PL	25.1/14.5	90.1	1, 9	MTPIEC	$1,371
7.5	1800	230/400	132M	70	Y754SDMV7FS-PL	26.3/15.2	90.4	1, 9	MTPIEC	$1,390
7.5	1200	400	160M	95	Y756SDMW7FS-PL	27/15.6	89.1	1, 9	MTPIEC	$2,376
11	3600	400	160M	93	0112SDMW7FS-PL	21	91.2	1, 9	MTPIEC	$1,885
11	1800	400	160M	102	0114SDMW7FS-PL	23.2	91.4	1, 9	MTPIEC	$1,877
11	1200	400	160L	115	0116SDMW7FS-PL	22.8	90.3	1, 9	MTPIEC	$3,332
15	3600	400	160M	103	0152SDMW7FS-PL	29	91.9	1, 9	MTPIEC	$2,442
15	1800	400	160L	119	0154SDMW7FS-PL	29.8	92.1	1, 9	MTPIEC	$2,318
15	1200	400	180L	193	0156SDMW7FS-P	31.4	91.2	1, 9	MTPIEC	$3,903
18.5	3600	400	160L	116	0182SDMW7FS-PL	35	92.4	1, 9	MTPIEC	$2,998
18.5	1800	400	180M	206	0184SDMW7FS-P	37.1	92.6	1, 9	MTPIEC	$2,812
18.5	1200	400	200L	278	0186SDMW7FS-P	39.4	91.7	1, 9	MTPIEC	$4,737
22	3600	400	180M	212	0222SDMW7FS-P	39	92.7	1, 9	MTPIEC	$3,444
22	1800	400	180L	212	0224SDMW7FS-P	42.1	93.0	1, 9	MTPIEC	$3,380
22	1200	400	200L	291	0226SDMW7FS-P	45.4	92.2	1, 9	MTPIEC	$5,783
30	3600	400	200L	304	0302SDMW7FS-P	55	93.3	1, 9	MTPIEC	$4,337
30	1800	400	200L	294	0304SDMW7FS-P	57.6	93.6	1, 9	MTPIEC	$4,370
30	1200	400	225S	352	0306SDMW7FS-P	60.8	92.9	1, 9	MTPIEC	$7,566
37	3600	400	200L	332	0372SDMW7FS-P	72.4	93.7	1, 9	MTPIEC	$6,014
37	1800	400	225S	344	0374SDMW7FS-P	72.4	93.9	1, 9	MTPIEC	$5,330
45	3600	400	225S	343	0452SDMW7FS-P	80	94.0	1, 9	MTPIEC	$7,411
45	1800	400	225S	374	0454SDMW7FS-P	86	94.2	1, 9	MTPIEC	$7,511
Footed D-Flange (B35)										
0.75	3600	230/400	80M	15	X752SDMV7GS-P	2.7/1.6	80.7	1, 9	MTPIEC	$518
0.75	1800	230/400	80M	19.5	X754SDMV7GS-P	3.3/1.9	82.5	1, 9	MTPIEC	$532
0.75	1200	230/400	90L	19.5	X756SDMV7GS-PL	3.5/2	78.9	1, 9	MTPIEC	$609
1.1	3600	230/400	80M	18	Y112SDMV7GS-P	3.8/2.2	82.7	1, 9	MTPIEC	$578
1.1	1800	230/400	90L	21	Y114SDMV7GS-PL	4.3/2.5	84.1	1, 9	MTPIEC	$563
1.1	1200	230/400	90L	28	Y116SDMV7GS-PL	5.2/3	81.0	1, 9	MTPIEC	$711
1.5	3600	230/400	90L	20	Y152SDMV7GS-PL	5.2/3	84.2	1, 9	MTPIEC	$607
1.5	1800	230/400	90L	22	Y154SDMV7GS-PL	5.9/3.4	85.3	1, 9	MTPIEC	$639
1.5	1200	230/400	100L	33	Y156SDMV7GS-PL	6.9/4	82.5	1, 9	MTPIEC	$823
2.2	3600	230/400	90L	22	Y222SDMV7GS-PL	7.5/4.3	85.9	1, 9	MTPIEC	$748
2.2	1800	230/400	100L	31	Y224SDMV7GS-PL	9.2/5.3	86.7	1, 9	MTPIEC	$735
2.2	1200	230/400	112M	46	Y226SDMV7GS-PL	9.0/5.2	84.3	1, 9	MTPIEC	$1,047
3	3600	230/400	100L	28	0032SDMV7GS-PL	9.7/5.6	87.1	1, 9	MTPIEC	$837
3	1800	230/400	100L	33	0034SDMV7GS-PL	12.0/6.9	87.7	1, 9	MTPIEC	$806
3	1200	230/400	132S	55	0036SDMV7GS-PL	11.7/6.8	85.6	1, 9	MTPIEC	$1,293
4	3600	230/400	112M	34	0042SDMV7GS-PL	12.5/7.2	88.1	1, 9	MTPIEC	$926
4	1800	230/400	112M	39	0044SDMV7GS-PL	14.9/8.6	88.6	1, 9	MTPIEC	$877

Totally Enclosed Fan Cooled
EQP Global® IEC Motors
Premium Efficiency

KW	Speed (RPM)	Volts	Frame	Weight (kg)	Model Number	FL Amps	Nominal FL EFF	Notes	Discount Symbol	List Price
4	1200	230/400	132M	61	0046SDMV7GS-PL	15.3/8.8	86.8	1, 9	MTPIEC	$1,538
5.5	3600	230/400	132S	55	Y552SDMV7GS-PL	18.0/10.4	89.2	1, 9	MTPIEC	$1,200
5.5	1800	230/400	132S	62	Y554SDMV7GS-PL	20.4/11.8	89.6	1, 9	MTPIEC	$1,200
5.5	1200	230/400	132M	74	Y556SDMV7GS-PL	20.4/11.8	88.0	1, 9	MTPIEC	$2,042
7.5	3600	230/400	132M	61	Y752SDMV7GS-PL	25.1/14.5	90.1	1, 9	MTPIEC	$1,440
7.5	1800	230/400	132M	70	Y754SDMV7GS-PL	26.3/15.2	90.4	1, 9	MTPIEC	$1,460
7.5	1200	400	160M	97	Y756SDMW7GS-PL	27/15.6	89.1	1, 9	MTPIEC	$2,495
11	3600	400	160M	93	0112SDMW7GS-PL	21	91.2	1, 9	MTPIEC	$1,979
11	1800	400	160M	102	0114SDMW7GS-PL	23.2	91.4	1, 9	MTPIEC	$1,971
11	1200	400	160L	116	0116SDMW7GS-PL	22.8	90.3	1, 9	MTPIEC	$3,499
15	3600	400	160M	103	0152SDMW7GS-PL	29	91.9	1, 9	MTPIEC	$2,564
15	1800	400	160L	118	0154SDMW7GS-PL	29.8	92.1	1, 9	MTPIEC	$2,434
18.5	3600	400	160L	116	0182SDMW7GS-PL	35	92.4	1, 9	MTPIEC	$3,148
Footless D-Flange (B5)										
0.75	3600	230/400	80M	15	X752SDMV7JS-P	2.7/1.6	80.7	1, 9	MTPIEC	$542
0.75	1800	230/400	80M	19.5	X754SDMV7JS-P	3.3/1.9	82.5	1, 9	MTPIEC	$558
0.75	1200	230/400	90L	22.5	X756SDMV7JS-PL	3.5/2	78.9	1, 9	MTPIEC	$638
1.1	3600	230/400	80M	18	Y112SDMV7JS-P	3.8/2.2	82.7	1, 9	MTPIEC	$605
1.1	1800	230/400	90L	23	Y114SDMV7JS-PL	4.3/2.5	84.1	1, 9	MTPIEC	$590
1.1	1200	230/400	90L	28	Y116SDMV7JS-PL	5.2/3	81.0	1, 9	MTPIEC	$745
1.5	3600	230/400	90L	20	Y152SDMV7JS-PL	5.2/3	84.2	1, 9	MTPIEC	$636
1.5	1800	230/400	90L	22	Y154SDMV7JS-PL	5.9/3.4	85.3	1, 9	MTPIEC	$670
1.5	1200	230/400	100L	33	Y156SDMV7JS-PL	6.9/4	82.5	1, 9	MTPIEC	$862
2.2	3600	230/400	90L	22	Y222SDMV7JS-PL	7.5/4.3	85.9	1, 9	MTPIEC	$783
2.2	1800	230/400	100L	29	Y224SDMV7JS-PL	9.2/5.3	86.7	1, 9	MTPIEC	$770
2.2	1200	230/400	112M	46	Y226SDMV7JS-PL	9.0/5.2	84.3	1, 9	MTPIEC	$1,097
3	3600	230/400	100L	28	0032SDMV7JS-PL	9.7/5.6	87.1	1, 9	MTPIEC	$877
3	1800	230/400	100L	30	0034SDMV7JS-PL	12.0/6.9	87.7	1, 9	MTPIEC	$845
3	1200	230/400	132S	55	0036SDMV7JS-PL	11.7/6.8	85.6	1, 9	MTPIEC	$1,354
4	3600	230/400	112M	34	0042SDMV7JS-PL	12.5/7.2	88.1	1, 9	MTPIEC	$970
4	1800	230/400	112M	39	0044SDMV7JS-PL	14.9/8.6	88.6	1, 9	MTPIEC	$919
4	1200	230/400	132M	61	0046SDMV7JS-PL	15.3/8.8	86.8	1, 9	MTPIEC	$1,612
5.5	3600	230/400	132S	55	Y552SDMV7JS-PL	18.0/10.4	89.2	1, 9	MTPIEC	$1,257
5.5	1800	230/400	132S	62	Y554SDMV7JS-PL	20.4/11.8	89.6	1, 9	MTPIEC	$1,257
5.5	1200	230/400	132M	74	Y556SDMV7JS-PL	20.4/11.8	88.0	1, 9	MTPIEC	$2,140
7.5	3600	230/400	132M	61	Y752SDMV7JS-PL	25.1/14.5	90.1	1, 9	MTPIEC	$1,508
7.5	1800	230/400	132M	70	Y754SDMV7JS-PL	26.3/15.2	90.4	1, 9	MTPIEC	$1,529
7.5	1200	400	160M	97	Y756SDMW7JS-PL	27/15.6	89.1	1, 9	MTPIEC	$2,614
11	3600	400	160M	93	0112SDMW7JS-PL	21	91.2	1, 9	MTPIEC	$2,074
11	1800	400	160M	102	0114SDMW7JS-PL	23.2	91.4	1, 9	MTPIEC	$2,065
11	1200	400	160L	120	0116SDMW7JS-PL	22.8	90.3	1, 9	MTPIEC	$3,665
15	3600	400	160M	103	0152SDMW7JS-PL	29	91.9	1, 9	MTPIEC	$2,686
15	1800	400	160L	118	0154SDMW7JS-PL	29.8	92.1	1, 9	MTPIEC	$2,550
15	1200	400	180L	192	0156SDMW7JS-P	31.4	91.2	1, 9	MTPIEC	$4,293
18.5	3600	400	160L	116	0182SDMW7JS-PL	35	92.4	1, 9	MTPIEC	$3,298
18.5	1800	400	180M	199	0184SDMW7JS-P	37.1	92.6	1, 9	MTPIEC	$3,093
18.5	1200	400	200L	275	0186SDMW7JS-P	39.4	91.7	1, 9	MTPIEC	$5,211

Totally Enclosed Fan Cooled
EQP Global® IEC Motors
Premium Efficiency

KW	Speed (RPM)	Volts	Frame	Weight (kg)	Model Number	FL Amps	Nominal FL EFF	Notes	Discount Symbol	List Price
22	3600	400	180M	194	0222SDMW7JS-P	39	92.7	1, 9	MTPIEC	$3,788
22	1800	400	180L	205	0224SDMW7JS-P	42.1	93.0	1, 9	MTPIEC	$3,718
22	1200	400	200L	290	0226SDMW7JS-P	45.4	92.2	1, 9	MTPIEC	$6,361
30	3600	400	200L	304	0302SDMW7JS-P	55	93.3	1, 9	MTPIEC	$4,771
30	1800	400	200L	300	0304SDMW7JS-P	57.6	93.6	1, 9	MTPIEC	$4,807
30	1200	400	225S	350	0306SDMW7JS-P	60.8	92.9	1, 9	MTPIEC	$8,323
37	3600	400	200L	330	0372SDMW7JS-P	66	93.7	1, 9	MTPIEC	$6,615
37	1800	400	225S	341	0374SDMW7JS-P	72.4	93.9	1, 9	MTPIEC	$5,863
45	3600	400	225S	340	0452SDMW7JS-P	80	94.0	1, 9	MTPIEC	$8,152
45	1800	400	225S	374	0454SDMW7JS-P	86	94.2	1, 9	MTPIEC	$8,262
Footed C-Face (B34)										
0.75	3600	230/400	80M	15	X752SDMV7HS-P	2.7/1.6	80.7	1, 9	MTPIEC	$542
0.75	1800	230/400	80M	19.5	X754SDMV7HS-P	3.3/1.9	82.5	1, 9	MTPIEC	$558
0.75	1200	230/400	90L	19.5	X756SDMV7HS-PL	3.5/2	78.9	1, 9	MTPIEC	$638
1.1	3600	230/400	80M	18	Y112SDMV7HS-P	3.8/2.2	82.7	1, 9	MTPIEC	$605
1.1	1800	230/400	90L	21	Y114SDMV7HS-PL	4.3/2.5	84.1	1, 9	MTPIEC	$590
1.1	1200	230/400	90L	28	Y116SDMV7HS-PL	5.2/3	81.0	1, 9	MTPIEC	$745
1.5	3600	230/400	90L	20	Y152SDMV7HS-PL	5.2/3	84.2	1, 9	MTPIEC	$636
1.5	1800	230/400	90L	22	Y154SDMV7HS-PL	5.9/3.4	85.3	1, 9	MTPIEC	$670
1.5	1200	230/400	100L	33	Y156SDMV7HS-PL	6.9/4	82.5	1, 9	MTPIEC	$862
2.2	3600	230/400	90L	22	Y222SDMV7HS-PL	7.5/4.3	85.9	1, 9	MTPIEC	$783
2.2	1800	230/400	100L	29	Y224SDMV7HS-PL	9.2/5.3	86.7	1, 9	MTPIEC	$770
2.2	1200	230/400	112M	46	Y226SDMV7HS-PL	9.0/5.2	84.3	1, 9	MTPIEC	$1,097
3	3600	230/400	100L	28	0032SDMV7HS-PL	9.7/5.6	87.1	1, 9	MTPIEC	$877
3	1800	230/400	100L	30	0034SDMV7HS-PL	12.0/6.9	87.7	1, 9	MTPIEC	$845
3	1200	230/400	132S	55	0036SDMV7HS-PL	11.7/6.8	85.6	1, 9	MTPIEC	$1,354
4	3600	230/400	112M	34	0042SDMV7HS-PL	12.5/7.2	88.1	1, 9	MTPIEC	$970
4	1800	230/400	112M	39	0044SDMV7HS-PL	14.9/8.6	88.6	1, 9	MTPIEC	$919
4	1200	230/400	132M	61	0046SDMV7HS-PL	15.3/8.8	86.8	1, 9	MTPIEC	$1,612
5.5	3600	230/400	132S	55	Y552SDMV7HS-PL	18.0/10.4	89.2	1, 9	MTPIEC	$1,257
5.5	1800	230/400	132S	62	Y554SDMV7HS-PL	20.4/11.8	89.6	1, 9	MTPIEC	$1,257
5.5	1200	230/400	132M	74	Y556SDMV7HS-PL	20.4/11.8	88.0	1, 9	MTPIEC	$2,140
7.5	3600	230/400	132M	61	Y752SDMV7HS-PL	25.1/14.5	90.1	1, 9	MTPIEC	$1,508
7.5	1800	230/400	132M	70	Y754SDMV7HS-PL	26.3/15.2	90.4	1, 9	MTPIEC	$1,529
7.5	1200	400	160M	97	Y756SDMW7HS-PL	27/15.6	89.1	1, 9	MTPIEC	$2,614
11	3600	400	160M	93	0112SDMW7HS-PL	21	91.2	1, 9	MTPIEC	$2,074
11	1800	400	160M	102	0114SDMW7HS-PL	23.2	91.4	1, 9	MTPIEC	$2,065
11	1200	400	160L	116	0116SDMW7HS-PL	22.8	90.3	1, 9	MTPIEC	$3,665
15	3600	400	160M	103	0152SDMW7HS-PL	29	91.9	1, 9	MTPIEC	$2,686
15	1800	400	160L	118	0154SDMW7HS-PL	29.8	92.1	1, 9	MTPIEC	$2,550
18.5	3600	400	160L	116	0182SDMW7HS-PL	35	92.4	1, 9	MTPIEC	$3,298
Footless C-Face (B14)										
0.75	3600	230/400	80M	15	X752SDMV7KS-P	2.7/1.6	80.7	1, 9	MTPIEC	$542
0.75	1800	230/400	80M	19.5	X754SDMV7KS-P	3.3/1.9	82.5	1, 9	MTPIEC	$558
0.75	1200	230/400	90L	19.5	X756SDMV7KS-PL	3.5/2	78.9	1, 9	MTPIEC	$638

Totally Enclosed Fan Cooled

EQP Global® IEC Motors

Premium Efficiency

KW	Speed (RPM)	Volts	Frame	Weight (kg)	Model Number	FL Amps	Nominal FL EFF	Notes	Discount Symbol	List Price
1.1	3600	230/400	80M	18	Y112SDMV7KS-P	3.8/2.2	82.7	1, 9	MTPIEC	$605
1.1	1800	230/400	90L	23	Y114SDMV7KS-PL	4.3/2.5	84.1	1, 9	MTPIEC	$590
1.1	1200	230/400	90L	28	Y116SDMV7KS-PL	5.2/3	81.0	1, 9	MTPIEC	$745
1.5	3600	230/400	90L	20	Y152SDMV7KS-PL	5.2/3	84.2	1, 9	MTPIEC	$636
1.5	1800	230/400	90L	22	Y154SDMV7KS-PL	5.9/3.4	85.3	1, 9	MTPIEC	$670
1.5	1200	230/400	100L	33	Y156SDMV7KS-PL	6.9/4	82.5	1, 9	MTPIEC	$862
2.2	3600	230/400	90L	22	Y222SDMV7KS-PL	7.5/4.3	85.9	1, 9	MTPIEC	$783
2.2	1800	230/400	100L	29	Y224SDMV7KS-PL	9.2/5.3	86.7	1, 9	MTPIEC	$770
2.2	1200	230/400	112M	46	Y226SDMV7KS-PL	9.0/5.2	84.3	1, 9	MTPIEC	$1,097
3	3600	230/400	100L	28	0032SDMV7KS-PL	9.7/5.6	87.1	1, 9	MTPIEC	$877
3	1800	230/400	100L	30	0034SDMV7KS-PL	12.0/6.9	87.7	1, 9	MTPIEC	$845
3	1200	230/400	132S	55	0036SDMV7KS-PL	11.7/6.8	85.6	1, 9	MTPIEC	$1,354
4	3600	230/400	112M	34	0042SDMV7KS-PL	12.5/7.2	88.1	1, 9	MTPIEC	$970
4	1800	230/400	112M	39	0044SDMV7KS-PL	14.9/8.6	88.6	1, 9	MTPIEC	$919
4	1200	230/400	132M	61	0046SDMV7KS-PL	15.3/8.8	86.8	1, 9	MTPIEC	$1,612
5.5	3600	230/400	132S	55	Y552SDMV7KS-PL	18.0/10.4	89.2	1, 9	MTPIEC	$1,257
5.5	1800	230/400	132S	62	Y554SDMV7KS-PL	20.4/11.8	89.6	1, 9	MTPIEC	$1,257
5.5	1200	230/400	132M	74	Y556SDMV7KS-PL	20.4/11.8	88.0	1, 9	MTPIEC	$2,140
7.5	3600	230/400	132S	61	Y752SDMV7KS-PL	25.1/14.5	90.1	1, 9	MTPIEC	$1,508
7.5	1800	230/400	132M	70	Y754SDMV7KS-PL	26.3/15.2	90.4	1, 9	MTPIEC	$1,529
7.5	1200	400	160M	97	Y756SDMW7KS-PL	27/15.6	89.1	1, 9	MTPIEC	$2,614
11	3600	400	160M	93	0112SDMW7KS-PL	21	91.2	1, 9	MTPIEC	$2,074
11	1800	400	160M	102	0114SDMW7KS-PL	23.2	91.4	1, 9	MTPIEC	$2,065
11	1200	400	160L	116	0116SDMW7KS-PL	22.8	90.3	1, 9	MTPIEC	$3,665
15	3600	400	160M	103	0152SDMW7KS-PL	29	91.9	1, 9	MTPIEC	$2,686
15	1800	400	160L	118	0154SDMW7KS-PL	29.8	92.1	1, 9	MTPIEC	$2,550
18.5	3600	400	160L	116	0182SDMW7KS-PL	35	92.4	1, 9	MTPIEC	$3,298

FL Amps and FL EFF are average expected design values and not guaranteed.
The weights listed above are estimated.
Please contact Toshiba for information on product availability.
"CF" = Consult Factory

IEC Motors

NEW PRODUCT

Totally Enclosed Fan Cooled Tosh-ECO® Permanent Magnet Motor

Toshiba is proud to introduce new Permanent Magnet low voltage motor products. With ever-increasing regulations on energy efficiency for electric motors, Toshiba offers high efficiency AC Permanent Magnet motors designed to meet IE4 and "Super Premium" efficiency levels. The AC Permanent Magnet Motor utilizes rare-earth neodymium elements in the rotor construction. By using permanent magnets incorporated into the AC Motor design, the motor utilizes the same power output and high torque density with reduced size and weight.

Standard Features:

- Totally Enclosed Fan Cooled
- Average Efficiency Improvement of 5-8% over Induction Motors
- Powerful Mechanical Strength & Corrosion Resistance of Rare Earth Magnet in Core
- Meets IE4 Efficiency Levels (As Defined by IEC60034-30-1)
- 400 V
- Three-Phase
- 1.0 Service Factor
- Class F-Random Wound
- IP55 Protection
- Slipless Design, Synchronous Speed, & Precise Application and Rotation Control
- No I2R Losses in Rotor
- Rotatable 90˚ Increments F-3 (Top Mount) with 2 Ground Provisions (One Plastic Cable Gland & Plug)
- Suitable for High Speed Operation Up to 20% Above Rated Speed at Constant Power (Beyond NEMA Max Overspeed)
- Non-NAFTA Qualified
- Pairs with AS3 & S15 Adjustable Speed Drives

Applications:

- Pumps
- Fans
- Conveyors
- Compressors
- Centrifuges
- Mixers

Totally Enclosed Fan Cooled
Tosh-ECO®
Permanent Magnet Motor
Super Premium Efficiency

CC129B

3 THREE YEAR WARRANTY

Toshiba is proud to introduce the IEC IE4 Permanent Magnet motors from the new Tosh-ECO® series. With ever-increasing regulations on energy efficiency for electric motors, Toshiba offers a high efficiency AC permanent magnet motor to meet the IE4 and "Super Premium" efficiency levels. The AC permanent magnet motor utilizes rare-earth neodymium elements in the rotor construction. By using permanent magnets incorporated into the AC motor design, the motor utilizes the same power output and high torque density with reduced size and weight.

Product Scope:

Power:	.55 to 315 kW
Speed:	1800, 3600, & 4500 RPM
Volt:	400 V
Enclosure:	Totally Enclosed Fan Cooled
Frame Size:	71 - 315 Frame per IEC 60072
Construction:	Aluminum Frame 71 - 132; Cast Iron Frame 160 - 315
Insulation Class:	Class F-Random Wound
Applicable Standards:	IEC 60034, 60072, 60204
Mounting:	Suitable for Horizontal Mounting; All Mounting Orientations for <160 Frame

Note: Consult factory for other ratings not listed
*Operates with an ASD

KW	Speed (RPM)	Volts	Frame	Weight (kg)	Model Number	FL Amps	Nominal FL EFF	Notes	Discount Symbol	List Price
0.55	3600	400	71M	5	PM1	1.2	88.0	1	MECPMM	CF
0.55	1800	400	71M	5	PM2	1.2	87.1	1	MECPMM	CF
0.75	4500	400	71M	5	PM3	1.6	88.2	1	MECPMM	CF
0.75	3600	400	71M	5	PM4	1.6	88.6	1	MECPMM	CF
0.75	1800	400	71M	6	PM5	1.6	88.6	1	MECPMM	$820
1.1	4500	400	71M	5	PM6	2.3	89.5	1	MECPMM	$892
1.1	3600	400	71M	6	PM7	2.3	90.0	1	MECPMM	$892
1.1	1800	400	71M	7	PM8	2.3	89.7	1	MECPMM	$901
1.5	4500	400	71M	6	PM9	3.2	90.4	1	MECPMM	$1,081
1.5	3600	400	71M	6	PM10	3.2	90.9	1	MECPMM	$1,081
1.5	1800	400	71M	7	PM11	3.2	89.9	1	MECPMM	$979
1.5	1800	400	90L	11	PM12	3.2	90.9	1	MECPMM	$979
2.2	4500	400	71M	7	PM13	4.6	91.5	1	MECPMM	$1,143
2.2	4500	400	90L	11	PM14	4.7	90.0	1	MECPMM	$1,143
2.2	3600	400	71M	7	PM15	4.5	91.8	1	MECPMM	$1,143
2.2	3600	400	90L	11	PM16	4.6	91.3	1	MECPMM	$1,143
2.2	1800	400	90L	13	PM17	4.5	91.5	1	MECPMM	$1,124
3	4500	400	90L	11	PM18	6.4	91.2	1	MECPMM	$1,281
3	3600	400	90L	13	PM19	6.3	91.6	1	MECPMM	$1,281
3	1800	400	90L	15	PM20	6.2	91.5	1	MECPMM	$1,203
4	4500	400	90L	13	PM21	8.3	92.0	1	MECPMM	$1,417
4	3600	400	90L	15	PM22	8.3	91.7	1	MECPMM	$1,417

Totally Enclosed Fan Cooled
Tosh-ECO®
Permanent Magnet Motor
Super Premium Efficiency

KW	Speed (RPM)	Volts	Frame	Weight (kg)	Model Number	FL Amps	Nominal FL EFF	Notes	Discount Symbol	List Price
4	1800	400	90L	18	PM23	8.1	92.1	1	MECPMM	$1,283
4	1800	400	112M	24	PM24	8.1	92.2	1	MECPMM	$1,283
5.5	4500	400	90L	15	PM25	11.5	92.6	1	MECPMM	$1,836
5.5	3600	400	90L	17	PM26	11.2	93.0	1	MECPMM	$1,836
5.5	3600	400	112M	24	PM27	11.3	92.2	1	MECPMM	$1,836
5.5	1800	400	112M	27	PM28	11.1	92.8	1	MECPMM	$1,836
7.5	3600	400	112M	27	PM29	15.0	92.8	1	MECPMM	$2,201
7.5	1800	400	112M	32	PM30	14.9	93.4	1	MECPMM	$2,233
11	3600	400	112M	32	PM31	22	93.6	1	MECPMM	$3,028
11	1800	400	112M	35	PM32	22	93.6	1	MECPMM	$3,014
11	1800	400	132M	54	PM33	22	94.2	1	MECPMM	$3,014
15	3600	400	112M	35	PM34	29	93.9	1	MECPMM	$3,922
15	3600	400	132M	54	PM35	31	94.0	1	MECPMM	$3,922
15	1800	400	132M	61	PM36	29	94.7	1	MECPMM	$3,722
18.5	3600	400	132M	61	PM37	37	94.3	1	MECPMM	$4,814
18.5	1800	400	132M	68	PM38	36	94.8	1	MECPMM	$4,516
22	3600	400	132M	68	PM39	44	94.4	1	MECPMM	$5,531
30	3600	400	132M	75	PM40	58	94.7	1	MECPMM	$6,966

FL Amps and FL EFF are average expected design values and not guaranteed.
The weights listed above are estimated.
Please contact Toshiba for information on product availability.
"CF" = Consult Factory

Definite Purpose Series

Totally Enclosed Fan Cooled Close-Coupled Pump Motors

The EQP Global® Close-Coupled Pump motor series is designed for close-coupled pumping applications and features multiple new design enhancements that make it one of the lowest cost-of-ownership products in the industry. This cutting-edge motor product line is designed to meet or exceed the competitive demands of the global fluid handling industry, as well as the amended integral horsepower (HP) rule IHMR 2016, while maintaining the high reliability and quality expected from Toshiba.

EQPGlobal® CCP

Standard Features:

- Totally Enclosed Fan Cooled
- Severe Duty
- NEMA Premium® Efficiency
- 60 Hz: 230/460 or 575 V
- 50 Hz: 190/380 V
- Three-Phase
- Dual Frequency 50/60 Hz Design
- 1.15 Service Factor
- Horizontal & Vertical with C Flange Option
- Class F Insulation; Inverter Duty, Exceeds NEMA MG1 Part 31
- IP55 Protection
- Cast Iron Frame, Bearing Brackets & Conduit Box
- Multi-Mount Capabilities on Most Frames (See Appendix B)
- Oversized 300 Series Bearing
- 100% No-Load Commercial Test per IEEE 112 on All Motors
- See Appendix C for ASD and Division 2 Capabilities
- Non-NAFTA Qualified

Totally Enclosed Fan Cooled
Close-Coupled Pump
NEMA Premium® Efficiency

CC027B

3 THREE YEAR WARRANTY

EQP Global® CCP

The EQP Global® Close-Coupled Pump motor series is designed for close-coupled pumping applications and features multiple new design enhancements that make it one of the lowest cost-of-ownership products in the industry. This cutting-edge motor product line is designed to meet or exceed the competitive demands of the global fluid handling industry, as well as the amended integral horsepower (HP) rule IHMR 2016, while maintaining the high reliability and quality expected from Toshiba.

Product Scope:

Horsepower: 1 to 75 HP

Speed (60 Hz): 3600, 1800, or 1200 RPM
(50 Hz): 3000, 1500, or 1000 RPM

Volt* (60 Hz): 230/460 or 575 V
(50 Hz): 190/380

Enclosure: Totally Enclosed Fan Cooled

Frame Size: 143JM/JP through 326JM/365JP

Construction: Cast Iron Frame, Conduit Box & Bearing Brackets

Insulation: Class F Inverter Duty, Exceeds NEMA MG1 Part 31
(Voltage Withstand Capability of 2000 V in 0.1 µs)

* Contact Toshiba for other voltages.

HP	Speed (RPM)	Volts	Frame	Weight (lbs.)	Model Number	FL Amps	Nominal FL EFF	Notes	Discount Symbol	List Price
JM										
1	1800	230/460	143JM	64	0014SDJR41M-P	3.4/1.7	85.5	1, 9, 18	MTPCCP	$773
1	1800	575	143JM	68	0014SDJC41M-P	1.2	85.6	1, 18	MTPCCP	$773
1	1200	230/460	145JM	66	0016SDJR41M-P	3.6/1.8	82.9	1, 9, 18	MTPCCP	$891
1	1200	575	145JM	56	0016SDJC41M-P	1.5	82.9	1, 18	MTPCCP	$891
1.5	3600	230/460	143JM	59	Y152SDJR41M-P	4.0/2.0	84.3	1, 9, 18	MTPCCP	$816
1.5	3600	575	143JM	73	Y152SDJC41M-P	1.6	84.3	1, 18	MTPCCP	$816
1.5	1800	230/460	145JM	59	Y154SDJR41M-P	4.8/2.4	86.5	1, 9, 18	MTPCCP	$821
1.5	1800	575	145JM	70	Y154SDJC41M-P	1.9	86.5	1, 18	MTPCCP	$821
1.5	1200	230/460	182JM	110	Y156SDJR41M-P	5.0/2.5	87.7	1, 9, 18	MTPCCP	$981
1.5	1200	575	182JM	79	Y156SDJC41M-P	2.0	87.5	1, 18	MTPCCP	$981
2	3600	230/460	145JM	62	0022SDJR41M-P	5.2/2.6	85.6	1, 9, 18	MTPCCP	$929
2	3600	575	145JM	55	0022SDJC41M-P	2.1	85.5	1, 18	MTPCCP	$929
2	1800	230/460	145JM	66	0024SDJR41M-P	6.0/3.0	86.5	1, 9, 18	MTPCCP	$868
2	1800	575	145JM	66	0024SDJC41M-P	2.4	86.5	1, 18	MTPCCP	$868
2	1200	230/460	184JM	123	0026SDJR41M-P	6.8/3.4	88.5	1, 9, 18	MTPCCP	$1,087
2	1200	575	184JM	93	0026SDJC41M-P	2.7	88.5	1, 18	MTPCCP	$1,087
3	3600	230/460	182JM	99	0032SDJR41M-P	7.4/3.7	86.7	1, 9, 18	MTPCCP	$988
3	3600	575	182JM	103	0032SDJC41M-P	3.0	86.7	1, 18	MTPCCP	$988
3	1800	230/460	182JM	110	0034SDJR41M-P	8.0/4.0	89.5	1, 9, 18	MTPCCP	$976
3	1800	575	182JM	112	0034SDJC41M-P	3.2	89.5	1, 18	MTPCCP	$976
3	1200	230/460	213JM	183	0036SDJR41M-P	8.8/4.4	89.6	1, 9, 18	MTPCCP	$1,404

Totally Enclosed Fan Cooled
Close-Coupled Pump
NEMA Premium® Efficiency

EQP Global CCP

HP	Speed (RPM)	Volts	Frame	Weight (lbs.)	Model Number	FL Amps	Nominal FL EFF	Notes	Discount Symbol	List Price
3	1200	575	213JM	147	0036SDJC41M-P	3.5	89.8	1, 18	MTPCCP	$1,404
5	3600	230/460	184JM	112	0052SDJR41M-P	11.6/5.8	88.7	1, 9, 18	MTPCCP	$1,151
5	3600	575	184JM	119	0052SDJC41M-P	4.6	88.7	1, 18	MTPCCP	$1,151
5	1800	230/460	184JM	114	0054SDJR41M-P	13.8/6.9	89.5	1, 9, 18	MTPCCP	$1,071
5	1800	575	184JM	125	0054SDJC41M-P	5.2	89.5	1, 18	MTPCCP	$1,071
5	1200	230/460	215JM	198	0056SDJR41M-P	13.8/6.9	89.6	1, 9, 18	MTPCCP	$1,962
5	1200	575	215JM	165	0056SDJC41M-P	5.5	89.6	1, 18	MTPCCP	$1,962
7.5	3600	230/460	213JM	183	Y752SDJR41M-P	18.0/9.0	89.7	1, 9, 18	MTPCCP	$1,421
7.5	3600	575	213JM	181	Y752SDJC41M-P	7.2	89.7	1, 18	MTPCCP	$1,421
7.5	1800	230/460	213JM	211	Y754SDJR41M-P	19.6/9.8	91.8	1, 9, 18	MTPCCP	$1,421
7.5	1800	575	213JM	171	Y754SDJC41M-P	7.8	91.8	1, 18	MTPCCP	$1,421
7.5	1200	230/460	254JM	330	Y756SDJR41M-P	20.4/10.2	91.2	1, 9, 18	MTPCCP	$2,525
7.5	1200	575	254JM	312	Y756SDJC41M-P	8.2	91.1	1, 18	MTPCCP	$2,525
10	3600	230/460	215JM	200	0102SDJR41M-P	23.6/11.8	90.2	1, 9, 18	MTPCCP	$1,656
10	3600	575	215JM	172	0102SDJC41M-P	9.4	91.7	1, 18	MTPCCP	$1,656
10	1800	230/460	215JM	215	0104SDJR41M-P	26/13	91.8	1, 9, 18	MTPCCP	$1,677
10	1800	575	215JM	186	0104SDJC41M-P	10.4	91.8	1, 18	MTPCCP	$1,677
10	1200	230/460	256JM	348	0106SDJR41M-P	26.8/13.4	91.3	1, 9, 18	MTPCCP	$3,012
10	1200	575	256JM	348	0106SDJC41M-P	10.8	91.2	1, 18	MTPCCP	$3,012
15	3600	230/460	254JM	294	0152SDJR41M-P	36/18	91.2	1, 9, 18	MTPCCP	$2,304
15	3600	575	254JM	295	0152SDJC41M-P	14.4	91.4	1, 18	MTPCCP	$2,304
15	1800	230/460	254JM	354	0154SDJR41M-P	38/19	92.6	1, 9, 18	MTPCCP	$2,295
15	1800	575	254JM	348	0154SDJC41M-P	15.2	92.6	1, 18	MTPCCP	$2,295
15	1200	230/460	284JM	442	0156SDJR41M-P	40/20	91.9	1, 9, 18	MTPCCP	$4,310
15	1200	575	284JM	442	0156SDJC41M-P	15.8	91.8	1, 18	MTPCCP	$4,310
20	3600	230/460	256JM	310	0202SDJR41M-P	48/24	91.3	1, 9, 18	MTPCCP	$2,894
20	3600	575	256JM	310	0202SDJC41M-P	19.2	91.3	1, 18	MTPCCP	$2,894
20	1800	230/460	256JM	394	0204SDJR41M-P	50/25	93.3	1, 9, 18	MTPCCP	$2,762
20	1800	575	256JM	389	0204SDJC41M-P	20	93.2	1, 18	MTPCCP	$2,762
20	1200	230/460	286JM	477	0206SDJR41M-P	50/25	91.8	1, 9, 18	MTPCCP	$4,955
20	1200	575	286JM	477	0206SDJC41M-P	20	91.9	1, 18	MTPCCP	$4,955
25	3600	230/460	284JM	473	0252SDJR41M-P	58/29	91.8	1, 9, 18	MTPCCP	$3,686
25	3600	575	284JM	473	0252SDJC41M-P	23	91.8	1, 18	MTPCCP	$3,686
25	1800	230/460	284JM	532	0254SDJR41M-P	62/31	93.8	1, 9, 18	MTPCCP	$3,722
25	1800	575	284JM	528	0254SDJC41M-P	24	93.6	1, 18	MTPCCP	$3,722
25	1200	230/460	324JM	616	0256SDJR41M-P	62/31	93.3	1, 9, 18	MTPCCP	$5,592
25	1200	575	324JM	592	0256SDJC41M-P	25	93.3	1, 18	MTPCCP	$5,592
30	3600	230/460	286JM	497	0302SDJR41M-P	70/35	91.9	1, 9, 18	MTPCCP	$4,160
30	3600	575	286JM	497	0302SDJC41M-P	28	91.9	1, 18	MTPCCP	$4,160
30	1800	230/460	286JM	671	0304SDJR41M-P	72/36	93.8	1, 9, 18	MTPCCP	$4,365
30	1800	575	286JM	548	0304SDJC41M-P	29	93.8	1, 18	MTPCCP	$4,365
30	1200	230/460	326JM	634	0306SDJR41M-P	74/37	93.3	1, 9, 18	MTPCCP	$6,700
30	1200	575	326JM	618	0306SDJC41M-P	30	93.3	1, 18	MTPCCP	$6,700
40	3600	230/460	324JM	657	0402SDJR41M-P	94/47	92.5	1, 9, 18	MTPCCP	$5,169
40	3600	575	324JM	658	0402SDJC41M-P	38	92.5	1, 18	MTPCCP	$5,169
40	1800	230/460	324JM	671	0404SDJR41M-P	96/48	94.1	1, 9, 18	MTPCCP	$5,551
40	1800	575	324JM	671	0404SDJC41M-P	38	94.1	1, 18	MTPCCP	$5,551
50	3600	230/460	326JM	693	0502SDJR41M-P	116/58	93.0	1, 9, 18	MTPCCP	$6,945

Totally Enclosed Fan Cooled
Close-Coupled Pump
NEMA Premium® Efficiency

HP	Speed (RPM)	Volts	Frame	Weight (lbs.)	Model Number	FL Amps	Nominal FL EFF	Notes	Discount Symbol	List Price
50	3600	575	326JM	693	0502SDJC41M-P	46	93.0	1, 18	MTPCCP	$6,945
50	1800	230/460	326JM	722	0504SDJR41M-P	120/60	94.5	1, 9, 18	MTPCCP	$6,220
50	1800	575	326JM	722	0504SDJC41M-P	48	94.5	1, 18	MTPCCP	$6,220
JP										
1	1800	230/460	143JP	68	0014SDJR41P-P	3.4/1.7	85.5	1, 9, 18	MTPCCP	$773
1	1800	575	143JP	68	0014SDJC41P-P	1.2	85.6	1, 18	MTPCCP	$773
1	1200	230/460	145JP	422	0016SDJR41P-P	3.6/1.8	82.9	1, 9, 18	MTPCCP	$891
1	1200	575	145JP	56	0016SDJC41P-P	1.5	82.9	1, 18	MTPCCP	$891
1.5	3600	230/460	143JP	73	Y152SDJR41P-P	4.0/2.0	84.3	1, 9, 18	MTPCCP	$816
1.5	3600	575	143JP	73	Y152SDJC41P-P	1.6	84.3	1, 18	MTPCCP	$816
1.5	1800	230/460	145JP	70	Y154SDJR41P-P	4.8/2.4	86.5	1, 9, 18	MTPCCP	$821
1.5	1800	575	145JP	70	Y154SDJC41P-P	1.9	86.5	1, 18	MTPCCP	$821
1.5	1200	230/460	182JP	532	Y156SDJR41P-P	5.0/2.5	87.7	1, 9, 18	MTPCCP	$981
1.5	1200	575	182JP	79	Y156SDJC41P-P	2.0	87.5	1, 18	MTPCCP	$981
2	3600	230/460	145JP	75	0022SDJR41P-P	5.2/2.6	85.6	1, 9, 18	MTPCCP	$929
2	3600	575	145JP	55	0022SDJC41P-P	2.1	85.5	1, 18	MTPCCP	$929
2	1800	230/460	145JP	66	0024SDJR41P-P	6.0/3.0	86.5	1, 9, 18	MTPCCP	$868
2	1800	575	145JP	66	0024SDJC41P-P	2.4	86.5	1, 18	MTPCCP	$868
2	1200	230/460	184JP	391	0026SDJR41P-P	6.8/3.4	88.5	1, 9, 18	MTPCCP	$1,087
2	1200	575	184JP	93	0026SDJC41P-P	2.7	88.5	1, 18	MTPCCP	$1,087
3	3600	230/460	182JP	103	0032SDJR41P-P	7.4/3.7	86.7	1, 9, 18	MTPCCP	$988
3	3600	575	182JP	103	0032SDJC41P-P	3.0	86.7	1, 18	MTPCCP	$988
3	1800	230/460	182JP	112	0034SDJR41P-P	8.0/4.0	89.5	1, 9, 18	MTPCCP	$976
3	1800	575	182JP	112	0034SDJC41P-P	3.2	89.5	1, 18	MTPCCP	$976
3	1200	230/460	213JP	576	0036SDJR41P-P	8.8/4.4	89.6	1, 9, 18	MTPCCP	$1,404
3	1200	575	213JP	147	0036SDJC41P-P	3.5	89.8	1, 18	MTPCCP	$1,404
5	3600	230/460	184JP	119	0052SDJR41P-P	11.6/5.8	88.7	1, 9, 18	MTPCCP	$1,151
5	3600	575	184JP	119	0052SDJC41P-P	4.6	88.7	1, 18	MTPCCP	$1,151
5	1800	230/460	184JP	125	0054SDJR41P-P	13.8/6.9	89.5	1, 9, 18	MTPCCP	$1,071
5	1800	575	184JP	125	0054SDJC41P-P	5.2	89.5	1, 18	MTPCCP	$1,071
5	1200	230/460	215JP	770	0056SDJR41P-P	13.8/6.9	89.6	1, 9, 18	MTPCCP	$1,962
5	1200	575	215JP	165	0056SDJC41P-P	5.5	89.6	1, 18	MTPCCP	$1,962
7.5	3600	230/460	213JP	431	Y752SDJR41P-P	18.0/9	89.7	1, 9, 18	MTPCCP	$1,421
7.5	3600	575	213JP	155	Y752SDJC41P-P	7.2	89.7	1, 18	MTPCCP	$1,421
7.5	1800	230/460	213JP	805	Y754SDJR41P-P	19.6/9.8	91.8	1, 9, 18	MTPCCP	$1,421
7.5	1800	575	213JP	171	Y754SDJC41P-P	7.8	91.8	1, 18	MTPCCP	$1,421
7.5	1200	230/460	254JP	312	Y756SDJR41P-P	20.4/10.2	91.2	1, 9, 18	MTPCCP	$2,525
7.5	1200	575	254JP	312	Y756SDJC41P-P	8.2	91.1	1, 18	MTPCCP	$2,525
10	3600	230/460	215JP	466	0102SDJR41P-P	23.6/11.8	90.2	1, 9, 18	MTPCCP	$1,656
10	3600	575	215JP	172	0102SDJC41P-P	9.4	91.7	1, 18	MTPCCP	$1,656
10	1800	230/460	215JP	215	0104SDJR41P-P	26/13	91.8	1, 9, 18	MTPCCP	$1,677
10	1800	575	215JP	186	0104SDJC41P-P	10.4	91.8	1, 18	MTPCCP	$1,677
10	1200	230/460	256JP	347	0106SDJR41P-P	26.8/13.4	91.3	1, 9, 18	MTPCCP	$3,012
10	1200	575	256JP	348	0106SDJC41P-P	10.8	91.2	1, 18	MTPCCP	$3,012
15	3600	230/460	254JP	294	0152SDJR41P-P	36/18	91.2	1, 9, 18	MTPCCP	$2,304
15	3600	575	254JP	295	0152SDJC41P-P	14.4	91.4	1, 18	MTPCCP	$2,304
15	1800	230/460	254JP	429	0154SDJR41P-P	38/19	92.6	1, 9, 18	MTPCCP	$2,295

Totally Enclosed Fan Cooled
Close-Coupled Pump
NEMA Premium® Efficiency

HP	Speed (RPM)	Volts	Frame	Weight (lbs.)	Model Number	FL Amps	Nominal FL EFF	Notes	Discount Symbol	List Price
15	1800	575	254JP	429	0154SDJC41P-P	15.2	92.6	1, 18	MTPCCP	$2,295
15	1200	230/460	284JP	442	0156SDJR41P-P	40/20	91.9	1, 9, 18	MTPCCP	$4,310
15	1200	575	284JP	442	0156SDJC41P-P	15.8	91.8	1, 18	MTPCCP	$4,310
20	3600	230/460	256JP	310	0202SDJR41P-P	48/24	91.3	1, 9, 18	MTPCCP	$2,894
20	3600	575	256JP	310	0202SDJC41P-P	19.2	91.3	1, 18	MTPCCP	$2,894
20	1800	230/460	256JP	389	0204SDJR41P-P	50/25	93.3	1, 9, 18	MTPCCP	$2,762
20	1800	575	256JP	389	0204SDJC41P-P	20	93.2	1, 18	MTPCCP	$2,762
20	1200	230/460	286JP	477	0206SDJR41P-P	50/25	91.8	1, 9, 18	MTPCCP	$4,955
20	1200	575	286JP	477	0206SDJC41P-P	20	91.9	1, 18	MTPCCP	$4,955
25	3600	230/460	284JP	473	0252SDJR41P-P	58/29	91.8	1, 9, 18	MTPCCP	$3,686
25	3600	575	284JP	473	0252SDJC41P-P	23	91.8	1, 18	MTPCCP	$3,686
25	1800	230/460	284JP	528	0254SDJR41P-P	62/31	93.8	1, 9, 18	MTPCCP	$3,722
25	1800	575	284JP	528	0254SDJC41P-P	24	93.6	1, 18	MTPCCP	$3,722
25	1200	230/460	324JP	591	0256SDJR41P-P	62/31	93.3	1, 9, 18	MTPCCP	$5,592
25	1200	575	324JP	592	0256SDJC41P-P	25	93.3	1, 18	MTPCCP	$5,592
30	3600	230/460	286JP	497	0302SDJR41P-P	70/35	91.9	1, 9, 18	MTPCCP	$4,160
30	3600	575	286JP	497	0302SDJC41P-P	28	91.9	1, 18	MTPCCP	$4,160
30	1800	230/460	286JP	548	0304SDJR41P-P	72/36	93.8	1, 9, 18	MTPCCP	$4,365
30	1800	575	286JP	548	0304SDJC41P-P	29	93.8	1, 18	MTPCCP	$4,365
30	1200	230/460	326JP	618	0306SDJR41P-P	74/37	93.3	1, 9, 18	MTPCCP	$6,700
30	1200	575	326JP	618	0306SDJC41P-P	30	93.3	1, 18	MTPCCP	$6,700
40	3600	230/460	324JP	657	0402SDJR41P-P	94/47	92.5	1, 9, 18	MTPCCP	$5,169
40	3600	575	324JP	658	0402SDJC41P-P	38	92.5	1, 18	MTPCCP	$5,169
40	1800	230/460	324JP	671	0404SDJR41P-P	96/48	94.1	1, 9, 18	MTPCCP	$5,551
40	1800	575	324JP	671	0404SDJC41P-P	38	94.1	1, 18	MTPCCP	$5,551
40	1200	230/460	364JP	809	0406SDJR41P-P	96/48	94.1	1, 9, 18	MTPCCP	$8,972
40	1200	575	364JP	810	0406SDJC41P-P	38	94.1	1, 18	MTPCCP	$8,972
50	3600	230/460	326JP	693	0502SDJR41P-P	116/58	93.0	1, 9, 18	MTPCCP	$6,945
50	3600	575	326JP	693	0502SDJC41P-P	46	93.0	1, 18	MTPCCP	$6,945
50	1800	230/460	326JP	721	0504SDJR41P-P	120/60	94.5	1, 9, 18	MTPCCP	$6,220
50	1800	575	326JP	722	0504SDJC41P-P	48	94.5	1, 18	MTPCCP	$6,220
50	1200	230/460	365JP	831	0506SDJR41P-P	120/60	94.1	1, 9, 18	MTPCCP	$10,313
50	1200	575	365JP	832	0506SDJC41P-P	48	94.1	1, 18	MTPCCP	$10,313
60	3600	230/460	364JP	627	0602SDJR41P-P	138/69	93.6	1, 9, 18	MTPCCP	$8,807
60	3600	575	364JP	627	0602SDJC41P-P	55	93.7	1, 18	MTPCCP	$8,807
60	1800	230/460	364JP	904	0604SDJR41P-P	138/69	95.1	1, 9, 18	MTPCCP	$8,913
60	1800	575	364JP	904	0604SDJC41P-P	55	95.1	1, 18	MTPCCP	$8,913
75	3600	230/460	365JP	932	0752SDJR41P-P	172/86	93.6	1, 9, 18	MTPCCP	$10,843
75	3600	575	365JP	932	0752SDJC41P-P	69	93.8	1, 18	MTPCCP	$10,843
75	1800	230/460	365JP	981	0754SDJR41P-P	170/85	95.4	1, 9, 18	MTPCCP	$11,207
75	1800	575	365JP	981	0754SDJC41P-P	69	95.4	1, 18	MTPCCP	$11,207

FL Amps and FL EFF are average expected design values and not guaranteed.
The weights listed above are estimated.
Please contact Toshiba for information on product availability.
"CF" = Consult Factory

Definite Purpose Series

Totally Enclosed Fan Cooled Tosh-ECO® Oil Well Pump

NEW PRODUCT

The Oil Well Pump motor is equipped to handle the harshest of environments, including installations in remote locations where the motor cannot be easily accessed. Specifically built for use in the oil and gas industry, these motors offer a high-slip, high-torque design in a totally enclosed fan cooled frame to safeguard against outdoor elements. Exceptional corrosion-resistance and high structural rigidity are inherent in this type of motor, and reliability and durability are critical factors that differentiate this product from competitors' offerings.

Standard Features:

- Totally Enclosed Fan Cooled
- Oil & Gas Duty
- High Efficiency Design
- 60 Hz: 230/460/796 V
- Three-Phase
- 60 Hz Design
- NEMA Design D (5 to 8% Slip)
- 1.15 Service Factor
- Class F Insulation
- IP55 Protection
- Cast Iron Frame, Conduit Box & Bearing Brackets
- Multi-Mount Capabilities on All Frames (See Appendix B)
- Corrosion-Resistant Screens for Open Motors
- F2 Assembly (F1 Field Modifiable)
- Thermal Protection on Motor Windings
- External Grounding Provisions
- Non-NAFTA Qualified

Applications:

- Beam Pumps
- Sucker Rod Pumps

Totally Enclosed Fan Cooled

Tosh-ECO® Oil Well Pump

High Efficiency

CC129B

2 TWO YEAR WARRANTY

Toshiba's Oil Well Pump motor shares the same superb quality as other Toshiba totally enclosed fan cooled design. The Oil Well Pump motor is equipped to handle the harshest of environments, including installations in remote locations where the motor cannot be easily accessed. Specifically built for use in the oil and gas industry, these motors offer a high-slip, high-torque design in a totally enclosed fan cooled frame. Exceptional corrosion-resistance and high structural rigidity are inherent in this type of motor, and reliability and durability are critical factors that differentiate this product from competitors' offerings.

Product Scope:

Horsepower: 5 to 125 HP

Speed (60 Hz): 1200 RPM

Volt (60 Hz): 230/460/796 V

Enclosure: Totally Enclosed Fan Cooled

Frame Size: 215T through 445T

Construction: Cast Iron Frame, Conduit Box & Bearing Brackets

Insulation: Class F

HP	Speed (RPM)	Volts	Frame	Weight (lbs.)	Model Number	FL Amps	Nominal FL EFF	Notes	Discount Symbol	List Price
5	1200	230/460/796	215T	172	OW13	14.4/7.2/4.2	84.0	1, 18	MECOWP	$1,347
7.5	1200	230/460/796	254T	278	OW14	20/10.2/5.9	86.5	1, 18	MECOWP	$1,890
10	1200	230/460/796	256T	295	OW15	27/13.4/7.7	87.5	1, 18	MECOWP	$2,189
15	1200	230/460/796	284T	386	OW16	42/21/12.1	84.0	1, 18	MECOWP	$2,924
20	1200	230/460/796	286T	420	OW17	56/28/16.2	85.5	1, 18	MECOWP	$3,491
25	1200	230/460/796	324T	646	OW18	66/33/19.1	85.5	1, 18	MECOWP	$4,180
30	1200	230/460/796	326T	730	OW19	80/40/23	85.5	1, 18	MECOWP	$4,645
40	1200	230/460/796	364T	838	OW20	100/50/29	86.5	1, 18	MECOWP	$6,297
50	1200	230/460/796	365T	865	OW21	124/62/35	87.5	1, 18	MECOWP	$7,281
60	1200	230/460/796	404T	1137	OW22	152/76/43	87.5	1, 18	MECOWP	$9,057
75	1200	230/460/796	405T	1249	OW23	188/94/54	87.5	1, 18	MECOWP	$11,004
100	1200	230/460/796	444T	1616	OW24	256/128/74	87.5	1, 2, 18	MECOWP	$13,989
125	1200	230/460/796	445T	1761	OW25	294/147/86	89.6	1, 2, 18	MECOWP	$16,864

FL Amps and FL EFF are average expected design values and not guaranteed.
The weights listed above are estimated.
Please contact Toshiba for information on product availability.
"CF" = Consult Factory

Definite Purpose Series

Totally Enclosed Fan Cooled & Totally Enclosed Air Over EQP Global® Cooling Tower Motors

The Cooling Tower motor features multiple enhancements specifically designed for cooling tower applications in wet and humid environments. Built with an IP56-rated enclosure and coated with corrosion-resistant Severe Duty epoxy paint system, the motor can withstand the most severe operating conditions with 100% humidity. The Cooling Tower motor is available in TEFC and TEAO designs for all operating conditions.

Standard Features:

- API 661 Compliant
- Totally Enclosed Fan Cooled or Totally Enclosed Air Over
- Severe Duty
- NEMA Premium® Efficiency
- 60 Hz: 230/460 or 575 V
- 50 Hz: 190/380 V
- Three-Phase
- Dual-Frequency 50/60 Hz Design
- Class F Insulation; Inverter Duty, Exceeds NEMA MG1 Part 31
- IP56 Protection
- Cast Iron Frame, Bearing Brackets & Conduit Box
- Multi-Mount Capabilities on All Frames (See Appendix B)
- Epoxy Finished Paint
- Multiple Drain Provisions for Horizontal & Vertical Mounting
- See Appendix C for ASD and Division 2 Capabilities
- Non-NAFTA Qualified

Applications:

- Blowers
- Fans
- Cooling Tower
- Heat Exchangers
- Evaporative Condensors
- Pumps

Totally Enclosed Fan Cooled & Totally Enclosed Air Over

EQP Global® Cooling Tower

NEMA Premium® Efficiency

CC027B

3 THREE YEAR WARRANTY

The Cooling Tower motor features multiple enhancements specifically designed for cooling tower applications in wet and humid environments. Built with an IP56-rated enclosure and coated with corrosion-resistant Severe Duty epoxy paint system, the motor can withstand the most severe operating conditions with 100% humidity. The Cooling Tower motor is available in TEFC and TEAO designs for all operating conditions.

Product Scope:

Horsepower:	0.75 to 75 HP
Speed	
(60 Hz)*	1800 or 1200 RPM
(50 Hz)*:	1500 or 1000 RPM
Volt	
(60 Hz)*	230/460 or 575 V
(50 Hz)*:	190/380 V
Enclosure:	Totally Enclosed Fan Cooled or Totally Enclosed Air Over
Frame Size:	143T through 365T
Construction:	Cast Iron Frame, Bearing Brackets & Conduit Box
Insulation:	Class F Inverter Duty, Exceeds NEMA MG1 Part 31 (Voltage Withstand Capability of 2000 V in 0.1 µs)
Environment:	Severe Duty, Suitable for Use in Class I Division 2 Hazardous Locations

*50/60 Hz Listed on Nameplate for 230/460 Designs

HP	Speed (RPM)	Volts	Frame	Weight (lbs.)	Model Number	FL Amps	Nominal FL EFF	Notes	Discount Symbol	List Price
TEFC										
0.75	1200	230/460	143T	60	3/46SDGR41A-P	2.8/1.4	81.5	1, 9, 15, 18	MTPFCT	$702
0.75	1200	575	143T	60	3/46SDGC41A-P	1.1	81.5	1, 15, 18	MTPFCT	$702
1	1800	230/460	143T	58	0014SDGR41A-P	3.4/1.7	85.5	1, 9, 15, 18	MTPFCT	$635
1	1800	575	143T	58	0014SDGC41A-P	1.3	85.5	1, 15, 18	MTPFCT	$635
1	1200	230/460	145T	62	0016SDGR41A-P	3.6/1.8	82.5	1, 9, 15, 18	MTPFCT	$794
1	1200	575	145T	62	0016SDGC41A-P	1.5	82.5	1, 15, 18	MTPFCT	$794
1.5	1800	230/460	145T	60	Y154SDGR41A-P	4.8/2.4	86.5	1, 9, 15, 18	MTPFCT	$707
1.5	1800	575	145T	59	Y154SDGC41A-P	1.9	86.5	1, 15, 18	MTPFCT	$707
1.5	1200	230/460	182T	99	Y156SDGR41A-P	5.0/2.5	87.5	1, 9, 15, 18	MTPFCT	$845
1.5	1200	575	182T	99	Y156SDGC41A-P	2.0	87.5	1, 15, 18	MTPFCT	$845
2	1800	230/460	145T	62	0024SDGR41A-P	6.0/3.0	86.5	1, 9, 15, 18	MTPFCT	$776
2	1800	575	145T	62	0024SDGC41A-P	2.4	86.5	1, 15, 18	MTPFCT	$776
2	1200	230/460	184T	110	0026SDGR41A-P	6.8/3.4	88.5	1, 9, 15, 18	MTPFCT	$943
2	1200	575	184T	110	0026SDGC41A-P	2.7	88.5	1, 15, 18	MTPFCT	$943
3	1800	230/460	182T	99	0034SDGR41A-P	8.0/4.0	89.5	1, 9, 15, 18	MTPFCT	$818
3	1800	575	182T	99	0034SDGC41A-P	3.2	89.5	1, 15, 18	MTPFCT	$818
3	1200	230/460	213T	163	0036SDGR41A-P	8.8/4.4	89.5	1, 9, 15, 18	MTPFCT	$1,152
3	1200	575	213T	168	0036SDGC41A-P	3.5	89.5	1, 15, 18	MTPFCT	$1,152
5	1800	230/460	184T	110	0054SDGR41A-P	13.0/6.5	89.5	1, 9, 15, 18	MTPFCT	$955
5	1800	575	184T	110	0054SDGC41A-P	5.2	89.5	1, 15, 18	MTPFCT	$955
5	1200	230/460	215T	176	0056SDGR41A-P	13.8/6.9	89.5	1, 9, 15, 18	MTPFCT	$1,623
5	1200	575	215T	179	0056SDGC41A-P	5.5	89.5	1, 15, 18	MTPFCT	$1,623

Totally Enclosed Fan Cooled & Totally Enclosed Air Over

EQP Global® Cooling Tower

NEMA Premium® Efficiency

HP	Speed (RPM)	Volts	Frame	Weight (lbs.)	Model Number	FL Amps	Nominal FL EFF	Notes	Discount Symbol	List Price
7.5	1800	230/460	213T	186	Y754SDGR41A-P	19.6/9.8	91.7	1, 9, 15, 18	MTPFCT	$1,387
7.5	1800	575	213T	179	Y754SDGC41A-P	7.8	91.7	1, 15, 18	MTPFCT	$1,387
7.5	1200	230/460	254T	281	Y756SDGR41A-P	20.4/10.2	91.0	1, 9, 15, 18	MTPFCT	$2,321
7.5	1200	575	254T	274	Y756SDGC41A-P	8.2	91.0	1, 15, 18	MTPFCT	$2,321
10	1800	230/460	215T	203	0104SDGR41A-P	26/13	91.7	1, 9, 15, 18	MTPFCT	$1,631
10	1800	575	215T	203	0104SDGC41A-P	10.4	91.7	1, 15, 18	MTPFCT	$1,631
10	1200	230/460	256T	292	0106SDGR41A-P	26.8/13.4	91.0	1, 9, 15, 18	MTPFCT	$2,850
10	1200	575	256T	293	0106SDGC41A-P	10.8	91.0	1, 15, 18	MTPFCT	$2,850
15	1800	230/460	254T	315	0154SDGR41A-P	38/19	92.4	1, 9, 15, 18	MTPFCT	$2,151
15	1800	575	254T	317	0154SDGC41A-P	15.2	92.4	1, 15, 18	MTPFCT	$2,151
15	1200	230/460	284T	443	0156SDGR41A-P	39.2/19.6	91.7	1, 9, 15, 18	MTPFCT	$3,787
15	1200	575	284T	441	0156SDGC41A-P	15.8	91.7	1, 15, 18	MTPFCT	$3,787
20	1800	230/460	256T	355	0204SDGR41A-P	50/25	93.0	1, 9, 15, 18	MTPFCT	$2,678
20	1800	575	256T	353	0204SDGC41A-P	20	93.0	1, 15, 18	MTPFCT	$2,678
20	1200	230/460	286T	478	0206SDGR41A-P	50.8/25.4	91.7	1, 9, 15, 18	MTPFCT	$4,457
20	1200	575	286T	478	0206SDGC41A-P	20.4	91.7	1, 15, 18	MTPFCT	$4,457
25	1800	230/460	284T	492	0254SDGR41A-P	61/30.5	93.6	1, 9, 15, 18	MTPFCT	$3,241
25	1800	575	284T	492	0254SDGC41A-P	24.4	93.6	1, 15, 18	MTPFCT	$3,241
25	1200	230/460	324T	627	0256SDGR41A-P	62.4/31.2	93.0	1, 9, 15, 18	MTPFCT	$5,405
25	1200	575	324T	615	0256SDGC41A-P	24.6	93.0	1, 15, 18	MTPFCT	$5,405
30	1800	230/460	286T	531	0304SDGR41A-P	72.0/36	93.8	1, 9, 15, 18	MTPFCT	$3,786
30	1800	575	286T	505	0304SDGC41A-P	29.2	93.6	1, 15, 18	MTPFCT	$3,786
30	1200	230/460	326T	638	0306SDGR41A-P	74.4/37.2	93.0	1, 9, 15, 18	MTPFCT	$6,224
30	1200	575	326T	631	0306SDGC41A-P	30	93.0	1, 15, 18	MTPFCT	$6,224
40	1800	230/460	324T	669	0404SDGR41A-P	96/48	94.1	1, 9, 15, 18	MTPFCT	$4,927
40	1800	575	324T	666	0404SDGC41A-P	38.4	94.1	1, 15, 18	MTPFCT	$4,927
40	1200	230/460	364T	811	0406SDGR41A-P	96/48	94.1	1, 9, 15, 18	MTPFCT	$8,435
40	1200	575	364T	802	0406SDGC41A-P	38.4	94.1	1, 15, 18	MTPFCT	$8,435
50	1800	230/460	326T	715	0504SDGR41A-P	120/60	94.5	1, 9, 15, 18	MTPFCT	$5,725
50	1800	575	326T	716	0504SDGC41A-P	48	94.5	1, 15, 18	MTPFCT	$5,725
50	1200	230/460	365T	834	0506SDGR41A-P	120/60	94.1	1, 9, 15, 18	MTPFCT	$9,684
50	1200	575	365T	833	0506SDGC41A-P	48	94.1	1, 15, 18	MTPFCT	$9,684
60	1800	230/460	364T	880	0604SDGR41A-P	138/69	95.0	1, 9, 15, 18	MTPFCT	$8,683
60	1800	575	364T	895	0604SDGC41A-P	55	95.0	1, 15, 18	MTPFCT	$8,683
75	1800	230/460	365T	961	0754SDGR41A-P	172/86	95.4	1, 9, 15, 18	MTPFCT	$10,419
75	1800	575	365T	979	0754SDGC41A-P	68.8	95.4	1, 15, 18	MTPFCT	$10,419
TEAO										
0.75	1200	230/460	143T	60	3/46FAGR41A-P	2.8/1.4	81.5	1, 9, 15, 18	MTPFCT	$702
0.75	1200	575	143T	60	3/46FAGC41A-P	1.1	81.5	1, 15, 18	MTPFCT	$702
1	1800	230/460	143T	58	0014FAGR41A-P	3.4/1.7	85.5	1, 9, 15, 18	MTPFCT	$635
1	1800	575	143T	58	0014FAGC41A-P	1.3	85.5	1, 15, 18	MTPFCT	$635
1	1200	230/460	145T	62	0016FAGR41A-P	3.6/1.8	82.5	1, 9, 15, 18	MTPFCT	$794
1	1200	575	145T	62	0016FAGC41A-P	1.5	82.5	1, 15, 18	MTPFCT	$794
1.5	1800	230/460	145T	60	Y154FAGR41A-P	4.8/2.4	86.5	1, 9, 15, 18	MTPFCT	$707
1.5	1800	575	145T	59	Y154FAGC41A-P	1.9	86.5	1, 15, 18	MTPFCT	$707
1.5	1200	230/460	182T	99	Y156FAGR41A-P	5.0/2.5	87.5	1, 9, 15, 18	MTPFCT	$845
1.5	1200	575	182T	99	Y156FAGC41A-P	2.0	87.5	1, 15, 18	MTPFCT	$845

Totally Enclosed Fan Cooled & Totally Enclosed Air Over

EQP Global® Cooling Tower

NEMA Premium® Efficiency

EQP Global CT

HP	Speed (RPM)	Volts	Frame	Weight (lbs.)	Model Number	FL Amps	Nominal FL EFF	Notes	Discount Symbol	List Price
2	1800	230/460	145T	62	0024FAGR41A-P	6.0/3.0	86.5	1, 9, 15, 18	MTPFCT	$776
2	1800	575	145T	62	0024FAGC41A-P	2.4	86.5	1, 15, 18	MTPFCT	$776
2	1200	230/460	184T	110	0026FAGR41A-P	6.8/3.4	88.5	1, 9, 15, 18	MTPFCT	$943
2	1200	575	184T	110	0026FAGC41A-P	2.7	88.5	1, 15, 18	MTPFCT	$943
3	1800	230/460	182T	99	0034FAGR41A-P	8.0/4.0	89.5	1, 9, 15, 18	MTPFCT	$818
3	1800	575	182T	99	0034FAGC41A-P	3.2	89.5	1, 15, 18	MTPFCT	$818
3	1200	230/460	213T	163	0036FAGR41A-P	8.8/4.4	89.5	1, 9, 15, 18	MTPFCT	$1,152
3	1200	575	213T	168	0036FAGC41A-P	3.5	89.5	1, 15, 18	MTPFCT	$1,152
5	1800	230/460	184T	110	0054FAGR41A-P	13.0/6.5	89.5	1, 9, 15, 18	MTPFCT	$955
5	1800	575	184T	110	0054FAGC41A-P	5.2	89.5	1, 15, 18	MTPFCT	$955
5	1200	230/460	215T	176	0056FAGR41A-P	13.8/6.9	89.5	1, 9, 15, 18	MTPFCT	$1,623
5	1200	575	215T	179	0056FAGC41A-P	5.5	89.5	1, 15, 18	MTPFCT	$1,623
7.5	1800	230/460	213T	186	Y754FAGR41A-P	19.6/9.8	91.7	1, 9, 15, 18	MTPFCT	$1,387
7.5	1800	575	213T	179	Y754FAGC41A-P	7.8	91.7	1, 15, 18	MTPFCT	$1,387
7.5	1200	230/460	254T	281	Y756FAGR41A-P	20.4/10.2	91.0	1, 9, 15, 18	MTPFCT	$2,321
7.5	1200	575	254T	274	Y756FAGC41A-P	8.2	91.0	1, 15, 18	MTPFCT	$2,321
10	1800	230/460	215T	203	0104FAGR41A-P	26/13	91.7	1, 9, 15, 18	MTPFCT	$1,631
10	1800	575	215T	203	0104FAGC41A-P	10.4	91.7	1, 15, 18	MTPFCT	$1,631
10	1200	230/460	256T	292	0106FAGR41A-P	26.8/13.4	91.0	1, 9, 15, 18	MTPFCT	$2,850
10	1200	575	256T	293	0106FAGC41A-P	10.8	91.0	1, 15, 18	MTPFCT	$2,850
15	1800	230/460	254T	315	0154FAGR41A-P	38/19	92.4	1, 9, 15, 18	MTPFCT	$2,151
15	1800	575	254T	317	0154FAGC41A-P	15.2	92.4	1, 15, 18	MTPFCT	$2,151
15	1200	230/460	284T	443	0156FAGR41A-P	39.2/19.6	91.7	1, 9, 15, 18	MTPFCT	$3,787
15	1200	575	284T	441	0156FAGC41A-P	15.8	91.7	1, 15, 18	MTPFCT	$3,787
20	1800	230/460	256T	355	0204FAGR41A-P	50/25	93.0	1, 9, 15, 18	MTPFCT	$2,678
20	1800	575	256T	353	0204FAGC41A-P	20	93.0	1, 15, 18	MTPFCT	$2,678
20	1200	230/460	286T	478	0206FAGR41A-P	50.8/25.4	91.7	1, 9, 15, 18	MTPFCT	$4,457
20	1200	575	286T	478	0206FAGC41A-P	20.4	91.7	1, 15, 18	MTPFCT	$4,457
25	1800	230/460	284T	492	0254FAGR41A-P	61/30.5	93.6	1, 9, 15, 18	MTPFCT	$3,241
25	1800	575	284T	492	0254FAGC41A-P	24.4	93.6	1, 15, 18	MTPFCT	$3,241
25	1200	230/460	324T	627	0256FAGR41A-P	62.4/31.2	93.0	1, 9, 15, 18	MTPFCT	$5,405
25	1200	575	324T	615	0256FAGC41A-P	24.6	93.0	1, 15, 18	MTPFCT	$5,405
30	1800	230/460	286T	531	0304FAGR41A-P	72.8/36.4	93.6	1, 9, 15, 18	MTPFCT	$3,786
30	1800	575	286T	505	0304FAGC41A-P	29.2	93.6	1, 15, 18	MTPFCT	$3,786
30	1200	230/460	326T	638	0306FAGR41A-P	74.4/37.2	93.0	1, 9, 15, 18	MTPFCT	$6,224
30	1200	575	326T	631	0306FAGC41A-P	30	93.0	1, 15, 18	MTPFCT	$6,224
40	1800	230/460	324T	669	0404FAGR41A-P	96/48	94.1	1, 9, 15, 18	MTPFCT	$4,927
40	1800	575	324T	666	0404FAGC41A-P	38.4	94.1	1, 15, 18	MTPFCT	$4,927
40	1200	230/460	364T	811	0406FAGR41A-P	96/48	94.1	1, 9, 15, 18	MTPFCT	$8,435
40	1200	575	364T	802	0406FAGC41A-P	38.4	94.1	1, 15, 18	MTPFCT	$8,435
50	1800	230/460	326T	715	0504FAGR41A-P	120/60	94.5	1, 9, 15, 18	MTPFCT	$5,725
50	1800	575	326T	716	0504FAGC41A-P	48	94.5	1, 15, 18	MTPFCT	$5,725
50	1200	230/460	365T	834	0506FAGR41A-P	120/60	94.1	1, 9, 15, 18	MTPFCT	$9,684
50	1200	575	365T	833	0506FAGC41A-P	48	94.1	1, 15, 18	MTPFCT	$9,684
60	1800	230/460	364T	880	0604FAGR41A-P	138/69	95.0	1, 9, 15, 18	MTPFCT	$8,683
60	1800	575	364T	895	0604FAGC41A-P	55	95.0	1, 15, 18	MTPFCT	$8,683
75	1800	230/460	365T	961	0754FAGR41A-P	172/86	95.4	1, 9, 15, 18	MTPFCT	$10,419
75	1800	575	365T	979	0754FAGC41A-P	68.8	95.4	1, 15, 18	MTPFCT	$10,419

Definite Purpose Series

Totally Enclosed Fan Cooled Quarry Duty

Toshiba's definite purpose, totally enclosed fan cooled, premium & high efficiency, Quarry Duty motor series has a proven track record of exceeding the extreme demands of the cement and aggregate industries. Our Quarry Duty motors utilize a totally enclosed fan cooled design and provide exceptionally high torque. This motor series exceeds NEMA MG1 Part 31 requirements and is designed for horizontal or vertical, indoor and outdoor applications.

Standard Features:

- Totally Enclosed Fan Cooled
- Severe Duty
- High & NEMA Premium® Efficiency
- High Torque Design
- 60 Hz: 460 or 575 V
- Three-Phase
- 60 Hz Design
- 1.25 Service Factor (Frames 184T-365T)
- 1.15 Service Factor (Frames 505-5810)
- Class F Inverter Duty, Exceeds NEMA MG1 Part 31
- IP55 Protection
- Cast Iron Frame, Bearing Brackets & Conduit Box
- Stamped Steel Fan Cover
- Multi-Mount Capabilities on Most Frames (See Appendix B)
- Polyurea Base Grease
- Open Regreasable Roller Bearings 505 Frame and Larger
- Shaft Slinger or V-Ring Shaft on Drive End
- 4142 High Strength Shaft Steel 505 Frame and Larger
- Grade-8 Hardware
- Bearing Lock Nuts for Vertical Mounting 505 Frame and Larger
- See Appendix C for ASD Capabilities

Applications:

- Ball & Rolling Mills
- Centrifuges
- Cone Crushers
- Conveyors
- Grinding Mills
- Hammer Mills
- Jaw Crushers
- Screens

Totally Enclosed Fan Cooled
Quarry Duty
High & NEMA Premium® Efficiency

CC027B CC129B NEMA Premium

3 THREE YEAR WARRANTY

Toshiba's definite purpose, Quarry Duty motor series has a proven track record of exceeding the extreme demands of the cement and aggregate industries. Our Quarry Duty motors utilize a totally enclosed fan cooled design and provide exceptional high torque. This motor series exceeds NEMA MG1 Part 31 requirements and is designed for horizontal or vertical, indoor and outdoor applications.

Product Scope:

Horsepower: 5 to 600 HP

Speed (60 Hz): 1800, 1200, or 900 RPM

Volt (60 Hz): 460 or 575 V

Enclosure: Totally Enclosed Fan Cooled

Frame Size: 184T through 5810UZ

Construction: Cast Iron Frame, Bearing Brackets & Conduit Box

Insulation: Class F Inverter Duty, Exceeds NEMA MG1 Part 31 (Voltage Withstand Capability of 2000 V in 0.1 µs)

HP	Speed (RPM)	Volts	Frame	Weight (lbs.)	Model Number	FL Amps	Nominal FL EFF	Notes	Discount Symbol	List Price
5	1800	460	184T	110	0054QDAB41A-P	6.7	89.5	1, 6, 18	MTPQDP	$799
5	1800	575	184T	110	0054QDAC41A-P	5.2	89.5	1, 6, 18	MTPQDP	$799
5	1200	460	215T	176	0056QDAB41A-P	7.0	89.5	1, 6, 18	MTPQDP	$1,465
5	1200	575	215T	179	0056QDAC41A-P	6.4	89.5	1, 6, 18	MTPQDP	$1,465
7.5	1800	460	213T	186	Y754QDAB41A-P	10.0	91.7	1, 6, 18	MTPQDP	$1,143
7.5	1800	575	213T	179	Y754QDAC41A-P	7.8	91.7	1, 6, 18	MTPQDP	$1,143
7.5	1200	460	254T	281	Y756QDAB41A-P	10.0	91	1, 6, 18	MTPQDP	$1,945
7.5	1200	575	254T	274	Y756QDAC41A-P	8.0	91.7	1, 6, 18	MTPQDP	$1,945
10	1800	460	215T	203	0104QDAB41A-P	14.0	91.7	1, 6, 18	MTPQDP	$1,390
10	1800	575	215T	203	0104QDAC41A-P	11.0	91.7	1, 6, 18	MTPQDP	$1,390
10	1200	460	256T	292	0106QDAB41A-P	13.0	91	1, 6, 18	MTPQDP	$2,376
10	1200	575	256T	293	0106QDAC41A-P	10.0	91	1, 6, 18	MTPQDP	$2,376
15	1800	460	254T	315	0154QDAB41A-P	21	92.4	1, 6, 18	MTPQDP	$1,877
15	1800	575	254T	317	0154QDAC41A-P	18.0	92.4	1, 6, 18	MTPQDP	$1,877
15	1200	460	284T	443	0156QDAB41A-P	20	91.7	1, 6, 18	MTPQDP	$3,332
15	1200	575	284T	441	0156QDAC41A-P	15.0	91.7	1, 6, 18	MTPQDP	$3,332
20	1800	460	256T	355	0204QDAB41A-P	25	93	1, 6, 18	MTPQDP	$2,318
20	1800	575	256T	353	0204QDAC41A-P	19.0	93	1, 6, 18	MTPQDP	$2,318
20	1200	460	286T	478	0206QDAB41A-P	25	91.7	1, 6, 18	MTPQDP	$3,903
20	1200	575	286T	478	0206QDAC41A-P	20	91.7	1, 6, 18	MTPQDP	$3,903
25	1800	460	284T	492	0254QDAB41A-P	30	93.6	1, 6, 18	MTPQDP	$2,812
25	1800	575	284T	496	0254QDAC41A-P	24	93.6	1, 6, 18	MTPQDP	$2,812
25	1200	460	324T	627	0256QDAB41A-P	31	93	1, 6, 18	MTPQDP	$4,737
25	1200	575	324T	615	0256QDAC41A-P	24	93	1, 6, 18	MTPQDP	$4,737
30	1800	460	286T	531	0304QDAB41A-P	39	93.6	1, 6, 18	MTPQDP	$3,380
30	1800	575	286T	518	0304QDAC41A-P	31	93.6	1, 6, 18	MTPQDP	$3,380
30	1200	460	326T	638	0306QDAB41A-P	37	93	1, 6, 18	MTPQDP	$5,783

Totally Enclosed Fan Cooled

Quarry Duty

High & NEMA Premium® Efficiency

HP	Speed (RPM)	Volts	Frame	Weight (lbs.)	Model Number	FL Amps	Nominal FL EFF	Notes	Discount Symbol	List Price
30	1200	575	326T	631	0306QDAC41A-P	30	93	1, 6, 18	MTPQDP	$5,783
40	1800	460	324T	669	0404QDAB41A-P	48	94.1	1, 6, 18	MTPQDP	$4,370
40	1800	575	324T	666	0404QDAC41A-P	38	94.1	1, 6, 18	MTPQDP	$4,370
40	1200	460	364T	811	0406QDAB41A-P	48	94.1	1, 6, 18	MTPQDP	$7,566
40	1200	575	364T	802	0406QDAC41A-P	38	94.1	1, 6, 18	MTPQDP	$7,566
50	1800	460	326T	715	0504QDAB41A-P	62	94.5	1, 6, 18	MTPQDP	$5,330
50	1800	575	326T	716	0504QDAC41A-P	49	94.5	1, 6, 18	MTPQDP	$5,330
50	1200	460	365T	834	0506QDAB41A-P	60	94.1	1, 6, 18	MTPQDP	$8,832
50	1200	575	365T	833	0506QDAC41A-P	48	94.1	1, 6, 18	MTPQDP	$8,832
60	1800	460	364T	880	0604QDAB41A-P	70	95	1, 6, 18	MTPQDP	$7,511
60	1800	575	364T	895	0604QDAC41A-P	56	95	1, 6, 18	MTPQDP	$7,511
75	1800	460	365T	961	0754QDAB41A-P	87	95.4	1, 6, 18	MTPQDP	$9,676
75	1800	575	365T	979	0754QDAC41A-P	69	95.4	1, 6, 18	MTPQDP	$9,676
200	1200	460	505UZ	2874	2006QDAB41-R	235	95.8	2, 6	MXTQDP	$24,563
200	1200	575	505UZ	2874	2006QDAC41-R	189	95.8	2, 6	MXTQDP	$24,563
200	900	460	N587UZQ	3840	2008QDAB41-R	282	94.5	2, 6	MXTQDP	$42,791
200	900	575	N587UZQ	3840	2008QDAC41-R	204	94.5	2, 6	MXTQDP	$42,791
250	1800	460	505UZ	2908	2504QDAB41-R	289	96.2	2, 6	MXTQDP	$31,341
250	1800	575	505UZ	2908	2504QDAC41-R	228	95.8	2, 6	MXTQDP	$31,341
250	1200	460	N587UZQ	3837	2506QDAB41-RF	308	95.8	2, 6	MXTQDP	$40,182
250	1200	575	N587UZQ	3837	2506QDAC41-R	241	95.8	2, 6	MXTQDP	$40,182
250	900	460	N587UZQ	4339	2508QDAB41-R	341	95.0	2, 6	MXTQDP	$47,438
250	900	575	N587UZQ	4339	2508QDAC41-R	264	95.0	2, 6	MXTQDP	$47,438
300	1800	460	N587UZQ	3815	3004QDAB41-R	346	96.2	2, 6	MXTQDP	$39,952
300	1800	575	N587UZQ	3815	3004QDAC41-R	274	96.2	2, 6	MXTQDP	$39,952
300	1200	460	N587UZQ	4037	3006QDAB41-R	367	95.8	2, 6	MXTQDP	$47,002
300	1200	575	N587UZQ	4037	3006QDAC41-R	325	95.8	2, 6	MXTQDP	$47,002
300	900	460	5810UZ	6000	F3008FLF4BMQ	443	95.0	2, 6, 18	MXTQDP	$53,174
300	900	575	5810UZ	6000	F3008FLF4OMQ	351	95.0	2, 6, 18	MXTQDP	$53,174
350	1800	460	N587UZQ	4081	3504QDAB41-R	398	96.2	2, 6	MXTQDP	$42,747
350	1800	575	N587UZQ	4081	3504QDAC41-R	330	96.2	2, 6	MXTQDP	$42,747
350	1200	460	5010UZ	4735	3506QDAB41-R1	426	95.8	2, 6	MXTQDP	$51,504
350	1200	575	5010UZ	4735	3506QDAC41-R1	343	95.8	2, 6	MXTQDP	$51,504
350	900	460	5810UZ	6083	F3508FLF4BMQ	488	93.6	2, 6, 18	MXTQDP	$59,889
350	900	575	5810UZ	6083	F3508FLF4OMQ	410	95	2, 6, 18	MXTQDP	$59,889
400	1800	460	N587UZQ	4088	4004QDAB41-R	462	96.2	2, 6	MXTQDP	$48,004
400	1800	575	N587UZQ	4088	4004QDAC41-R	372	96.2	2, 6	MXTQDP	$48,004
400	1200	460	5010UZ	4500	F4006FLF4BMQ	510	95.2	2, 6	MXTQDP	$51,456
400	1200	575	5010UZ	4500	F4006FLF4OMQ	421	95.4	2, 6	MXTQDP	$51,456
400	900	460	5810UZ	5982	F4008FLF4BMQ	514	95.3	2, 6, 18	MXTQDP	$68,259
400	900	575	5810UZ	5982	F4008FLF4OMQ	449	95	2, 6, 18	MXTQDP	$68,259
450	1800	460	5010UZ	4905	4504QDAB41-R	573	96.2	2, 6	MXTQDP	$51,121
450	1800	575	5010UZ	4905	4504QDAC41-R	432	96.2	2, 6	MXTQDP	$51,121
450	1200	460	5810UZ	5856	F4506FLF4BMQ	532	96.2	2, 6, 18	MXTQDP	$56,247
450	1200	575	5810UZ	5856	F4506FLF4OMQ	425	96.2	2, 6, 18	MXTQDP	$56,247
450	900	460	5810UZ	7800	F4508FLF4BMQ	616	95.5	2, 6, 18	MXTQDP	$73,289
450	900	575	5810UZ	7800	F4508FLF4OMQ	544	95	2, 6, 18	MXTQDP	$73,289
500	1800	460	5810UZ	5000	5004QDAB41-R	551	96.2	2, 6, 18	MXTQDP	$53,452

Totally Enclosed Fan Cooled

Quarry Duty

High & NEMA Premium® Efficiency

HP	Speed (RPM)	Volts	Frame	Weight (lbs.)	Model Number	FL Amps	Nominal FL EFF	Notes	Discount Symbol	List Price
500	1800	575	5810UZ	5000	5004QDAC41-R	443	96.2	2, 6, 18	MXTQDP	$53,452
500	1200	460	5810UZ	5987	F5006FLF4BMQ	645	95.4	2, 6, 18	MXTQDP	$71,163
500	1200	575	5810UZ	5987	F5006FLF4OMQ	524	95	2, 6, 18	MXTQDP	$71,163
600	1800	460	5810UZ	5870	F6004FLF4BMQ	682	95.4	2, 6, 18	MXTQDP	$61,200
600	1800	575	5810UZ	5870	F6004FLF4OMQ	540	95	2, 6, 18	MXTQDP	$61,200
600	1200	460	5810UZ	6083	F6006FLF4BMQ	776	95.8	2, 6, 18	MXTQDP	$85,397
600	1200	575	5810UZ	6083	F6006FLF4OMQ	612	95.8	2, 6, 18	MXTQDP	$85,397

FL Amps and FL EFF are average expected design values and not guaranteed.
The weights listed above are estimated.
Please contact Toshiba for information on product availability.
"CF" = Consult Factory

Definite Purpose Series

Open Drip-Proof
Dry Kiln Low Voltage Motor Series

Toshiba's Open Drip-Proof (ODP) Dry Kiln motor series is specifically designed for the harshest dry kiln environments. In response to the lumber industry's increased drying temperatures, Toshiba's ODP product line incorporates a new and improved insulation system, allowing for the motor to run in higher ambient temperatures (115° and 135°C) for faster processing time and providing the use of adjustable speed drives (ASDs) for higher operating efficiency. Designed for the harsh internal environment of lumber drying kilns, the motor's corrosion resistance and high structural rigidity allow for exceptional performance in any dry kiln environment with high ambient temperatures, high humidity, and chemicals.

Standard Features:

- Open Drip-Proof
- Kiln Duty
- NEMA Premium® Efficiency
- 60 Hz: 460 V
- Three-Phase
- 60 Hz Design
- 115˚ and 135˚C Designs
- 1.15 Service Factor for 115°C Ambient Designs
- NEMA Design B
- Class H Insulation System, Inverter Duty Exceeds NEMA MG1 Part 31
- IP22 Protection
- Cast Iron Frame & Bearing Brackets
- Special Windings for High Humidity and Corrosive Atmospheres
- High Temperature Bearing Grease

Applications:

- Soft Wood Dry Kilns
- Hard Wood Dry Kilns
- High Temperature Fans - Oven Conveyors

Open Drip-Proof
Dry Kiln
NEMA Premium® Efficiency

CC0141A

2 TWO YEAR WARRANTY

The ODP Dry Kiln Motor Series features a new and improved insulation system which allows the motors to run in higher ambient temperatures (115° and 135° C) for faster processing time and higher operational efficiency when paired with adjustable speed drives.

Designed for internal harsh environments of the lumber drying kilns, the motor's corrosion resistance and high structural rigidity allow for exceptional performance in any dry kiln environment with high ambient temperatures, high humidity, and chemicals. Further benefits of the motor series include NEMA Premium Efficiency rating, cast iron construction, and H-class insulation system utilizing an epoxy varnish.

Product Scope:

Horsepower: 5 to 25 HP
Speed (60 Hz): 1200 or 900 RPM
Volt (60 Hz): 460 V
Enclosure: Open Drip-Proof
Frame Size: 215T through 365T
Construction: Cast Iron Frame & Bearing Brackets
Insulation: Class H Inverter Duty, Exceeds NEMA MG1 Part 31

HP	Speed (RPM)	Volts	Frame	Weight (lbs.)	Model Number	FL Amps	Nominal FL EFF	Notes	Discount Symbol	List Price
115° C										
5	1200	460	215T	176	0056DPKB31A-PY	7.2	89.5	1	MCTDPK	$1,553
5	900	460	254T	236	0058DPKB31A-PY	8.0	88.5	1	MCTDPK	$2,708
7.5	1200	460	254T	236	Y756DPKB31A-PY	10.5	90.2	1	MCTDPK	$2,274
7.5	900	460	256T	310	Y758DPKB31A-PY	11.5	89.5	1	MCTDPK	$3,557
10	1200	460	256T	310	0106DPKB31A-PY	14.2	91.7	1	MCTDPK	$2,532
10	900	460	284T	380	0108DPKB31A-PY	15.1	90.2	1	MCTDPK	$3,888
15	1200	460	284T	380	0156DPKB31A-PY	19.3	91.7	1	MCTDPK	$3,203
15	900	460	286T	446	0158DPKB31A-PY	22.3	90.2	1	MCTDPK	$5,164
20	1200	460	286T	446	0206DPKB31A-PY	25.7	92.4	1	MCTDPK	$3,812
20	900	460	324T	527	0208DPKB31A-PY	29	91.0	1	MCTDPK	$6,062
25	1200	460	324T	527	0256DPKB31A-PY	32.3	93.0	1	MCTDPK	$4,652
25	900	460	326T	617	0258DPKB31A-PY	35.8	91.0	1	MCTDPK	$7,102
135° C										
7.5	1200	460	256T	310	Y756DPKB31A-PZ	10.3	90.2	1, 3	MCTDPK	$2,972
7.5	900	460	284T	380	Y758DPKB31A-PZ	11.2	89.5	1, 3	MCTDPK	$4,535
10	1200	460	284T	380	0106DPKB31A-PZ	13.7	91.7	1, 3	MCTDPK	$3,775
10	900	460	286T	446	0108DPKB31A-PZ	14.5	90.2	1, 3	MCTDPK	$4,905
15	1200	460	286T	446	0156DPKB31A-PZ	19.0	91.7	1, 3	MCTDPK	$4,161
15	900	460	324T	527	0158DPKB31A-PZ	21.5	90.2	1, 3	MCTDPK	$6,243
20	1200	460	324T	527	0206DPKB31A-PZ	26.1	92.4	1, 3	MCTDPK	$5,677
20	900	460	364T	750	0208DPKB31A-PZ	26	91.0	1, 3	MCTDPK	$7,338
25	1200	460	364T	750	0256DPKB31A-PZ	30.9	93.0	1, 3	MCTDPK	$7,110
25	900	460	365T	838	0258DPKB31A-PZ	34.5	91.0	1, 3	MCTDPK	$8,318

Definite Purpose Series

Totally Enclosed Fan Cooled EQP Global® Brake Motor

Toshiba's definite purpose, totally enclosed fan cooled, NEMA Premium® efficiency, Brake Motor series is designed to meet the needs of general holding applications. This product line is built to withstand the toughest conditions and offers some of the highest efficiency and torque ratings while producing some of the lowest vibration ratings in the industry—leading to a longer life and greater reliability. The Brake Motor series is suitable for indoor and outdoor use.

Standard Features:

- Totally Enclosed Fan Cooled
- Holding Duty
- NEMA Premium® Efficiency
- 60 Hz: 230/460 or 575 V
- 50 Hz: 190/380 V
- Three-Phase
- Dual Frequency 50/ 60 Hz Design
- 1.15 Service Factor
- Class F Insulation; Inverter Duty, Exceeds NEMA MG1 Part 31
- IP55 Protection
- All Cast Iron Construction
- Multi-Mount Capabilities on Most Frames (See Appendix B)
- V-Ring Seal on Drive End
- Brake Ratings 15 lb. ft. and Below Suitable for Vertical Mounting
- See Appendix C for ASD Capabilities
- Non-NAFTA Qualified

Applications:

- Conveyors
- Gear Reducers
- Material Handling
- Baggage Handling
- Carousels & Palletizing
- Holding Applications
- Packaging
- Door Operators
- Machine Tool

Brake Options:

- Solenoid Actuated Spring-Set Brakes
- Multiple Options for Brake Voltages
- Manual Release Lever on Rear of Brake Housing
- Wear Adjustment
- Static Torque Ratings from 3 to 125 lb. ft.
- Spring-Kits for 210 Frame and Larger Vertical Mountings

Totally Enclosed Fan Cooled
EQP Global® Brake Motor
NEMA Premium® Efficiency

CC027B

3 THREE YEAR WARRANTY

Toshiba's definite purpose, totally enclosed fan cooled, NEMA Premium® efficiency, EQP Global Brake Motor series is designed to meet the needs of general holding applications. This product line is built to withstand the toughest conditions and offers some of the highest efficiency and torque ratings while producing some of the lowest vibration ratings in the industry—leading to a longer life and greater reliability. The EQP Global Brake Motor series is suitable for indoor and outdoor use.

Product Scope:

Horsepower: 0.75 to 30 HP

Speed
(60 Hz) 1800 or 1200 RPM
(50 Hz): 1500 or 1000 RPM

Volt
(60 Hz) 230/460 or 575 V
(50 Hz): 190/380 V

Enclosure: Totally Enclosed Fan Cooled

Frame Size: 143T through 286T

Construction: All Cast Iron

Insulation: Class F Inverter Duty, Exceeds NEMA MG1 Part 31
(Voltage Withstand Capability of 2000 V in 0.1 µs)

Brake Coil
Voltage: Matches Motor Voltage

HP	Speed (RPM)	Volts	Frame	Brake (ft.-lbs.)	Weight (lbs.)	Model Number	FL Amps	Nominal FL EFF	Notes	Discount Symbol	List Price
0.75	1200	230/460	143T	6	66	3/46SDBA41A-P	2.8/1.4	81.5	1, 9, 15, 18	MTPBRK	$1,997
0.75	1200	575	143T	6	66	3/46SDBC41A-P	1.1	81.5	1, 15, 18	MTPBRK	$1,998
1	1800	230/460	143T	6	66	0014SDBA41A-P	3.4/1.7	85.5	1, 9, 15, 18	MTPBRK	$1,914
1	1800	575	143T	6	66	0014SDBC41A-P	1.3	85.5	1, 15, 18	MTPBRK	$1,914
1	1200	230/460	145T	10	75	0016SDBA41A-P	3.6/1.8	82.5	1, 9, 15, 18	MTPBRK	$2,126
1	1200	575	145T	10	75	0016SDBC41A-P	1.5	82.5	1, 15, 18	MTPBRK	$2,126
1.5	1800	230/460	145T	10	70	Y154SDBA41A-P	4.8/2.4	86.5	1, 9, 15, 18	MTPBRK	$2,060
1.5	1800	575	145T	10	70	Y154SDBC41A-P	1.9	86.5	1, 15, 18	MTPBRK	$2,060
1.5	1200	230/460	182T	10	94	Y156SDBA41A-P	5.0/2.5	87.5	1, 9, 15, 18	MTPBRK	$2,165
1.5	1200	575	182T	10	94	Y156SDBC41A-P	2.0	87.5	1, 15, 18	MTPBRK	$2,165
2	1800	230/460	145T	10	74	0024SDBA41A-P	6.0/3.0	86.5	1, 9, 15, 18	MTPBRK	$2,104
2	1800	575	145T	10	74	0024SDBC41A-P	2.4	86.5	1, 15, 18	MTPBRK	$2,104
2	1200	230/460	184T	15	113	0026SDBA41A-P	6.8/3.4	88.5	1, 9, 15, 18	MTPBRK	$2,563
2	1200	575	184T	15	113	0026SDBC41A-P	2.7	88.5	1, 15, 18	MTPBRK	$2,563
3	1800	230/460	182T	15	110	0034SDBA41A-P	8.0/4.0	89.5	1, 9, 15, 18	MTPBRK	$2,486
3	1800	575	182T	15	110	0034SDBC41A-P	3.2	89.5	1, 15, 18	MTPBRK	$2,486
3	1200	230/460	213T	35	189	0036SDBA41A-P	8.8/4.4	89.5	1, 9, 18	MTPBRK	$4,406
3	1200	575	213T	35	189	0036SDBC41A-P	3.5	89.5	1, 18	MTPBRK	$4,406
5	1800	230/460	184T	25	115	0054SDBA41A-P	13.0/6.5	89.5	1, 9, 15, 18	MTPBRK	$2,576
5	1800	575	184T	25	115	0054SDBC41A-P	5.2	89.5	1, 15, 18	MTPBRK	$2,576
5	1200	230/460	215T	35	206	0056SDBA41A-P	13.8/6.9	89.5	1, 9, 18	MTPBRK	$4,832
5	1200	575	215T	35	206	0056SDBC41A-P	5.5	89.5	1, 18	MTPBRK	$4,832
7.5	1800	230/460	213T	35	217	Y754SDBA41A-P	19.6/9.8	91.7	1, 9, 18	MTPBRK	$4,539
7.5	1800	575	213T	35	217	Y754SDBC41A-P	7.8	91.7	1, 18	MTPBRK	$4,539

Totally Enclosed Fan Cooled

EQP Global® Brake Motor

NEMA Premium® Efficiency

HP	Speed (RPM)	Volts	Frame	Brake (ft.-lbs.)	Weight (lbs.)	Model Number	FL Amps	Nominal FL EFF	Notes	Discount Symbol	List Price
7.5	1200	230/460	254T	50	254	Y756SDBA41A-P	20.4/10.2	91.0	1, 9, 18	MTPBRK	$5,768
7.5	1200	575	254T	50	254	Y756SDBC41A-P	8.2	91.0	1, 18	MTPBRK	$5,768
10	1800	230/460	215T	50	232	0104SDBA41A-P	26/13	91.7	1, 9, 18	MTPBRK	$5,264
10	1800	575	215T	50	232	0104SDBC41A-P	10.4	91.7	1, 18	MTPBRK	$5,264
10	1200	230/460	256T	75	327	0106SDBA41A-P	26.8/13.4	91.0	1, 9, 18	MTPBRK	$7,060
10	1200	575	256T	75	327	0106SDBC41A-P	10.8	91.0	1, 18	MTPBRK	$7,060
15	1800	230/460	254T	75	310	0154SDBA41A-P	38/19	92.4	1, 9, 18	MTPBRK	$6,606
15	1800	575	254T	75	310	0154SDBC41A-P	15.2	92.4	1, 18	MTPBRK	$6,606
15	1200	230/460	284T	105	408	0156SDBA41A-P	39.2/19.6	91.7	1, 9, 18	MTPBRK	$9,479
15	1200	575	284T	105	408	0156SDBC41A-P	15.8	91.7	1, 18	MTPBRK	$9,479
20	1800	230/460	256T	105	433	0204SDBA41A-P	50/25	93.0	1, 9, 18	MTPBRK	$8,557
20	1800	575	256T	105	433	0204SDBC41A-P	20	93.0	1, 18	MTPBRK	$8,557
20	1200	230/460	286T	125	650	0206SDBA41A-P	50.8/25.4	91.7	1, 9, 18	MTPBRK	$13,048
20	1200	575	286T	125	650	0206SDBC41A-P	20.4	91.7	1, 18	MTPBRK	$13,048
25	1800	230/460	284T	105	471	0254SDBA41A-P	61/30.5	93.6	1, 9, 18	MTPBRK	$10,150
25	1800	575	284T	105	471	0254SDBC41A-P	24.4	93.6	1, 18	MTPBRK	$10,150
30	1800	230/460	286T	125	635	0304SDBA41A-P	72.8/36.4	93.6	1, 9, 18	MTPBRK	$12,573
30	1800	575	286T	125	635	0304SDBC41A-P	29.2	93.6	1, 18	MTPBRK	$12,573

FL Amps and FL EFF are average expected design values and not guaranteed.
The weights listed above are estimated.
Please contact Toshiba for information on product availability.
"CF" = Consult Factory

Totally Enclosed Fan Cooled

EQP Global® Brake Motor

NEMA Premium® Efficiency

HP	Speed (RPM)	Volts	Frame	Brake (ft.-lbs.)	Weight (lbs.)	Model Number	FL Amps	Nominal FL EFF	Notes	Discount Symbol	List Price
C-Face Footed											
0.75	1200	230/460	143TC	6	64	3/46SDBA42A-P	2.8/1.4	81.5	1, 9, 15, 16, 18	MTPBRK	$2,057
0.75	1200	575	143TC	6	64	3/46SDBC42A-P	1.1	81.5	1, 15, 16, 18	MTPBRK	$2,058
1	1800	230/460	143TC	6	74	0014SDBA42A-P	3.4/1.7	85.5	1, 9, 15, 16, 18	MTPBRK	$1,971
1	1800	575	143TC	6	74	0014SDBC42A-P	1.3	85.5	1, 15, 16, 18	MTPBRK	$1,971
1	1200	230/460	145TC	10	69	0016SDBA42A-P	3.6/1.8	82.5	1, 9, 15, 16, 18	MTPBRK	$2,190
1	1200	575	145TC	10	69	0016SDBC42A-P	1.5	82.5	1, 15, 16, 18	MTPBRK	$2,190
1.5	1800	230/460	145TC	10	69	Y154SDBA42A-P	4.8/2.4	86.5	1, 9, 15, 16, 18	MTPBRK	$2,122
1.5	1800	575	145TC	10	69	Y154SDBC42A-P	1.9	86.5	1, 15, 16, 18	MTPBRK	$2,122
1.5	1200	230/460	182TC	10	92	Y156SDBA42A-P	5.0/2.5	87.5	1, 9, 15, 16, 18	MTPBRK	$2,230
1.5	1200	575	182TC	10	92	Y156SDBC42A-P	2.0	87.5	1, 15, 16, 18	MTPBRK	$2,230
2	1800	230/460	145TC	10	74	0024SDBA42A-P	6.0/3.0	86.5	1, 9, 15, 16, 18	MTPBRK	$2,167
2	1800	575	145TC	10	74	0024SDBC42A-P	2.4	86.5	1, 15, 16, 18	MTPBRK	$2,167
2	1200	230/460	184TC	15	107	0026SDBA42A-P	6.8/3.4	88.5	1, 9, 15, 16, 18	MTPBRK	$2,640
2	1200	575	184TC	15	107	0026SDBC42A-P	2.7	88.5	1, 15, 16, 18	MTPBRK	$2,640
3	1800	230/460	182TC	15	136	0034SDBA42A-P	8.0/4.0	89.5	1, 9, 15, 16, 18	MTPBRK	$2,561
3	1800	575	182TC	15	136	0034SDBC42A-P	3.2	89.5	1, 15, 16, 18	MTPBRK	$2,561
3	1200	230/460	213TC	35	184	0036SDBA42A-P	8.8/4.4	89.5	1, 9, 16, 18	MTPBRK	$4,538
3	1200	575	213TC	35	184	0036SDBC42A-P	3.5	89.5	1, 16, 18	MTPBRK	$4,538
5	1800	230/460	184TC	25	115	0054SDBA42A-P	13.0/6.5	89.5	1, 9, 15, 16, 18	MTPBRK	$2,653
5	1800	575	184TC	25	115	0054SDBC42A-P	5.2	89.5	1, 15, 16, 18	MTPBRK	$2,653
5	1200	230/460	215TC	35	206	0056SDBA42A-P	13.8/6.9	89.5	1, 9, 16, 18	MTPBRK	$4,977
5	1200	575	215TC	35	206	0056SDBC42A-P	5.5	89.5	1, 16, 18	MTPBRK	$4,977
7.5	1800	230/460	213TC	35	272	Y754SDBA42A-P	19.6/9.8	91.7	1, 9, 16, 18	MTPBRK	$4,675
7.5	1800	575	213TC	35	272	Y754SDBC42A-P	7.8	91.7	1, 16, 18	MTPBRK	$4,675
7.5	1200	230/460	254TC	50	272	Y756SDBA42A-P	20.4/10.2	91.0	1, 9, 16, 18	MTPBRK	$5,941
7.5	1200	575	254TC	50	272	Y756SDBC42A-P	8.2	91.0	1, 16, 18	MTPBRK	$5,941
10	1800	230/460	215TC	50	227	0104SDBA42A-P	26/13	91.7	1, 9, 16, 18	MTPBRK	$5,422
10	1800	575	215TC	50	227	0104SDBC42A-P	10.4	91.7	1, 16, 18	MTPBRK	$5,422
10	1200	230/460	256TC	75	352	0106SDBA42A-P	26.8/13.4	91.0	1, 9, 16, 18	MTPBRK	$7,272
10	1200	575	256TC	75	352	0106SDBC42A-P	10.8	91.0	1, 16, 18	MTPBRK	$7,272
15	1800	230/460	254TC	75	402	0154SDBA42A-P	38/19	92.4	1, 9, 16, 18	MTPBRK	$6,804
15	1800	575	254TC	75	402	0154SDBC42A-P	15.2	92.4	1, 16, 18	MTPBRK	$6,804
15	1200	230/460	284TC	105	408	0156SDBA42A-P	39.2/19.6	91.7	1, 9, 18	MTPBRK	$9,763
15	1200	575	284TC	105	408	0156SDBC42A-P	15.8	91.7	1, 18	MTPBRK	$9,763
20	1800	230/460	256TC	105	330	0204SDBA42A-P	50/25	93.0	1, 9, 16, 18	MTPBRK	$8,814
20	1800	575	256TC	105	330	0204SDBC42A-P	20	93.0	1, 16, 18	MTPBRK	$8,814
20	1200	230/460	286TC	125	650	0206SDBA42A-P	50.8/25.4	91.7	1, 9, 18	MTPBRK	$13,439
20	1200	575	286TC	125	650	0206SDBC42A-P	20.4	91.7	1, 18	MTPBRK	$13,439
25	1800	230/460	284TC	105	489	0254SDBA42A-P	61/30.5	93.6	1, 9, 18	MTPBRK	$10,455
25	1800	575	284TC	105	489	0254SDBC42A-P	24.4	93.6	1, 18	MTPBRK	$10,455
30	1800	230/460	286TC	125	560	0304SDBA42A-P	72.8/36.4	93.6	1, 9, 18	MTPBRK	$12,950
30	1800	575	286TC	125	560	0304SDBC42A-P	29.2	93.6	1, 18	MTPBRK	$12,950

Totally Enclosed Fan Cooled

EQP Global® Brake Motor

NEMA Premium® Efficiency

HP	Speed (RPM)	Volts	Frame	Brake (ft.-lbs.)	Weight (lbs.)	Model Number	FL Amps	Nominal FL EFF	Notes	Discount Symbol	List Price
C-Face Footless											
0.75	1200	230/460	143TC	6	64	3/46SDBA44A-P	2.8/1.4	81.5	1, 9, 15, 18	MTPBRK	$2,097
0.75	1200	575	143TC	6	64	3/46SDBC44A-P	1.1	81.5	1, 15, 18	MTPBRK	$2,098
1	1800	230/460	143TC	6	74	0014SDBA44A-P	3.4/1.7	85.5	1, 9, 15, 18	MTPBRK	$2,010
1	1800	575	143TC	6	74	0014SDBC44A-P	1.3	85.5	1, 15, 18	MTPBRK	$2,010
1	1200	230/460	145TC	10	69	0016SDBA44A-P	3.6/1.8	82.5	1, 9, 15, 18	MTPBRK	$2,232
1	1200	575	145TC	10	69	0016SDBC44A-P	1.5	82.5	1, 15, 18	MTPBRK	$2,232
1.5	1800	230/460	145TC	10	69	Y154SDBA44A-P	4.8/2.4	86.5	1, 9, 15, 18	MTPBRK	$2,163
1.5	1800	575	145TC	10	69	Y154SDBC44A-P	1.9	86.5	1, 15, 18	MTPBRK	$2,163
1.5	1200	230/460	182TC	10	92	Y156SDBA44A-P	5.0/2.5	87.5	1, 9, 15, 18	MTPBRK	$2,273
1.5	1200	575	182TC	10	92	Y156SDBC44A-P	2.0	87.5	1, 15, 18	MTPBRK	$2,273
2	1800	230/460	145TC	10	74	0024SDBA44A-P	6.0/3.0	86.5	1, 9, 15, 18	MTPBRK	$2,209
2	1800	575	145TC	10	74	0024SDBC44A-P	2.4	86.5	1, 15, 18	MTPBRK	$2,209
2	1200	230/460	184TC	15	107	0026SDBA44A-P	6.8/3.4	88.5	1, 9, 15, 18	MTPBRK	$2,691
2	1200	575	184TC	15	107	0026SDBC44A-P	2.7	88.5	1, 15, 18	MTPBRK	$2,691
3	1800	230/460	182TC	15	136	0034SDBA44A-P	8.0/4.0	89.5	1, 9, 15, 18	MTPBRK	$2,610
3	1800	575	182TC	15	136	0034SDBC44A-P	3.2	89.5	1, 15, 18	MTPBRK	$2,610
3	1200	230/460	213TC	35	184	0036SDBA44A-P	8.8/4.4	89.5	1, 9, 18	MTPBRK	$4,626
3	1200	575	213TC	35	184	0036SDBC44A-P	3.5	89.5	1, 18	MTPBRK	$4,626
5	1800	230/460	184TC	15	115	0054SDBA44A-P	13.0/6.5	89.5	1, 9, 15, 18	MTPBRK	$2,705
5	1800	575	184TC	15	115	0054SDBC44A-P	5.2	89.5	1, 15, 18	MTPBRK	$2,705
5	1200	230/460	215TC	35	206	0056SDBA44A-P	13.8/6.9	89.5	1, 9, 18	MTPBRK	$5,074
5	1200	575	215TC	35	206	0056SDBC44A-P	5.5	89.5	1, 18	MTPBRK	$5,074
7.5	1800	230/460	213TC	35	272	Y754SDBA44A-P	19.6/9.8	91.7	1, 9, 18	MTPBRK	$4,766
7.5	1800	575	213TC	35	272	Y754SDBC44A-P	7.8	91.7	1, 18	MTPBRK	$4,766
7.5	1200	230/460	254TC	50	272	Y756SDBA44A-P	20.4/10.2	91.0	1, 9, 18	MTPBRK	$6,056
7.5	1200	575	254TC	50	272	Y756SDBC44A-P	8.2	91.0	1, 18	MTPBRK	$6,056
10	1800	230/460	215TC	50	227	0104SDBA44A-P	26/13	91.7	1, 9, 18	MTPBRK	$5,527
10	1800	575	215TC	50	227	0104SDBC44A-P	10.4	91.7	1, 18	MTPBRK	$5,527
10	1200	230/460	256TC	75	352	0106SDBA44A-P	26.8/13.4	91.0	1, 9, 18	MTPBRK	$7,413
10	1200	575	256TC	75	352	0106SDBC44A-P	10.8	91.0	1, 18	MTPBRK	$7,413
15	1800	230/460	254TC	75	402	0154SDBA44A-P	38/19	92.4	1, 9, 18	MTPBRK	$6,936
15	1800	575	254TC	75	402	0154SDBC44A-P	15.2	92.4	1, 18	MTPBRK	$6,936
15	1200	230/460	284TC	105	408	0156SDBA44A-P	39.2/19.6	91.7	1, 9, 18	MTPBRK	$9,953
15	1200	575	284TC	105	408	0156SDBC44A-P	15.8	91.7	1, 18	MTPBRK	$9,953
20	1800	230/460	256TC	105	330	0204SDBA44A-P	50/25	93.0	1, 9, 18	MTPBRK	$8,985
20	1800	575	256TC	105	330	0204SDBC44A-P	20	93.0	1, 18	MTPBRK	$8,985
20	1200	230/460	286TC	125	650	0206SDBA44A-P	50.8/25.4	91.7	1, 9, 18	MTPBRK	$13,700
20	1200	575	286TC	125	650	0206SDBC44A-P	20.4	91.7	1, 18	MTPBRK	$13,700
25	1800	230/460	284TC	105	489	0254SDBA44A-P	61/30.5	93.6	1, 9, 18	MTPBRK	$10,658
25	1800	575	284TC	105	489	0254SDBC44A-P	24.4	93.6	1, 18	MTPBRK	$10,658
30	1800	230/460	286TC	125	560	0304SDBA44A-P	72.8/36.4	93.6	1, 9, 18	MTPBRK	$13,202
30	1800	575	286TC	125	560	0304SDBC44A-P	29.2	93.6	1, 18	MTPBRK	$13,202

Definite Purpose Series

Totally Enclosed Fan Cooled Vertical P-Base Motors

Toshiba's definite purpose, totally enclosed fan cooled, Vertical P-Base Footless motors are designed with the petrochemical and material processing industries in mind. These motors are built to withstand the toughest conditions and offer some of the highest efficiency and torque ratings—leading to longer life and greater reliability. In addition, our LP design meets API 610 specifications for chemical processing applications and all motors include a patent-pending lubrication system that provides improved flow and circulation of grease and oil for longer bearing life. The Vertical P-Base motor can be used in indoor and outdoor applications, exceeds NEMA MG1 Part 31 requirements, and is available in normal, medium, and high thrust.

Standard Features:

- Totally Enclosed Fan Cooled
- Mill & Chemical Duty
- NEMA Premium® Efficiency
- 60 Hz: 460 V
- Three-Phase
- 60 Hz Design
- 1.15 Service Factor
- NEMA Design B
- Class F Insulation; Inverter Duty, Exceeds NEMA MG1 Part 31
- IP55 Protection
- All Cast Iron Construction
- HP (Normal Thrust), LP (Medium Thrust)
- Positive Displacement Grease Lubrication System
- Labyrinth Seal on Top Bracket (Option for Drive End)
- Base Brackets in Various Diameters
- Low-Friction Internal Double-Lip Seal for Grease & Oil Mist Designs
- 260 to 3780 lbs. Down Thrust (Minimum L-10 at 17,500 Hours)
- IEEE 841 Design Available
- See Appendix C for ASD and Division 2 Capabilities

Applications:

- Booster Pumps
- Centrifugal Pumps
- Non-Clog pumps
- In-Line Pumps
- Vertical Turbine Pumps

Totally Enclosed Fan Cooled
Vertical P-Base Footless Normal & Medium Thrust
NEMA Premium® Efficiency

CC027B

NEMA Premium

3 THREE YEAR WARRANTY

Toshiba's definite purpose, totally enclosed fan cooled, premium efficiency, Vertical P-Base Footless normal, medium, and high thrust motors are designed with the petrochemical and material processing industries in mind. These motors are built to withstand the toughest conditions and offer some of the highest efficiency and torque ratings—leading to a longer life and greater reliability. In addition, our medium thrust design meets API 610 specifications for chemical processing applications and all motors include a patent-pending lubrication system that provides improved flow and circulation of grease and oil for longer bearing life.

Product Scope:

Horsepower: 3 to 350 HP

Speed (60 Hz): 3600, 1800, or 1200 RPM

Volt (60 Hz): 460 V

Enclosure: Totally Enclosed Fan Cooled

Frame Size: 180HP10 through N449LP20

Construction: All Cast Iron

Thrust Ratings: 260 to 3780 Pounds

Insulation: Class F Inverter Duty, Exceeds NEMA MG1 Part 31 (Voltage Withstand Capability of 2000 V in 0.1 µs)

HP	Speed (RPM)	Volts	Frame	BD Dimension	Max DownThrust Cap (lbs)	Weight (lbs.)	Model Number	FL Amps	Nominal FL EFF	Notes	Discount Symbol	List Price
NORMAL THRUST												
3	3600	460	180HP10	10"	260	125	0032FTVB3PW-A	3.4	89.9		MXTFCV	$5,797
3	1800	460	180HP10	10"	390	125	0034FTVB3PW-A	3.7	89.5		MXTFCV	$5,978
5	3600	460	180HP10	10"	310	150	0052FTVB3PW-A	5.7	89.8		MXTFCV	$6,306
5	1800	460	180HP10	10"	490	150	0054FTVB3PW-A	6.1	89.5		MXTFCV	$6,179
7.5	3600	460	210HP10	10"	310	200	Y752FTVB3PW-A	8.7	90.5		MXTFCV	$7,870
7.5	1800	460	210HP10	10"	560	200	Y754FTVB3PW-A	9.1	91.7		MXTFCV	$6,672
10	3600	460	210HP10	10"	380	250	0102FTVB3PW-A	11.4	90.2		MXTFCV	$8,586
10	1800	460	210HP10	10"	640	250	0104FTVB3PW-A	12.0	91.8		MXTFCV	$7,282
15	3600	460	250HP10	10"	760	350	0152FTVB3PW-A	16.6	91.6		MXTFCV	$10,071
15	1800	460	250HP10	10"	1050	400	0154FTVB3PW-A	18.2	92.4		MXTFCV	$9,544
15	1200	460	280HP10	10"	1200	500	0156FTVB3PW-A	18.6	92.3		MXTFCV	$9,975
20	3600	460	250HP10	10"	750	370	0202FTVB3PW-A	21	92.5		MXTFCV	$11,335
20	1800	460	250HP10	10"	1040	400	0204FTVB3PW-A	24	93.1		MXTFCV	$10,202
20	1200	460	280HP10	10"	1200	500	0206FTVB3PW-A	25	91.7		MXTFCV	$11,192
25	3600	460	280HP10	10"	740	360	0252FTVB3PW-A	28	92.4		MXTFCV	$11,518
25	1800	460	280HP10	10"	1050	500	0254FTVB3PW-A	29	93.8		MXTFCV	$10,934
25	1200	460	320HP16	10"	1335	650	0256FTVB3RW-A	62	93.0		MXTFCV	$13,072
30	3600	460	280HP10	10"	730	550	0302FTVB3PW-A	33	92.4		MXTFCV	$12,002
30	1800	460	280HP10	10"	1050	500	0304FTVB3PW-A	34.9	93.6		MXTFCV	$11,483
30	1200	460	320HP16	16"	1335	700	0306FTVB3RW-A	37	93.6		MXTFCV	$14,328
40	3600	460	320HP16	16"	850	600	0402FTVB3RW-A	45	93.1		MXTFCV	$13,514
40	1800	460	320HP16	16"	1170	650	0404FTVB3RW-A	47	94.1		MXTFCV	$13,190
40	1200	460	360HP16	16"	1335	850	0406FTVB3RW-A	48	94.1		MXTFCV	$15,663
50	3600	460	320HP16	16"	830	600	0502FTVB3RW-A	56	93.0		MXTFCV	$14,504

Totally Enclosed Fan Cooled
Vertical P-Base Footless
Normal & Medium Thrust
NEMA Premium® Efficiency

HP	Speed (RPM)	Volts	Frame	BD Dimension	Max DownThrust Cap (lbs)	Weight (lbs.)	Model Number	FL Amps	Nominal FL EFF	Notes	Discount Symbol	List Price
50	1800	460	320HP16	16”	1150	700	0504FTVB3RW-A	60	94.5		MXTFCV	$14,480
50	1200	460	360HP16	16”	1335	920	0506FTVB3RW-A	61	94.1		MXTFCV	$18,467
60	3600	460	360HP16	16”	940	780	0602FTVB3RW-A	69	93.8		MXTFCV	$16,484
60	1800	460	360HP16	16”	1290	950	0604FTVB3RW-A	70	95.1		MXTFCV	$17,201
60	1200	460	400HP16	16”	1690	1500	0606FTVB3RW-A	72	95.0		MXTFCV	$21,426
75	3600	460	360HP16	16”	930	900	0752FTVB3RW-A	85	93.6		MXTFCV	$16,750
75	1800	460	360HP16	16”	1270	950	0754FTVB3RW-A	88	95.4		MXTFCV	$17,750
75	1200	460	400HP16	16”	1640	1500	0756FTVB3RW-A	91	95.0		MXTFCV	$25,197
100	3600	460	400HP16	16”	1300	990	1002FTVB3RW-A	112	95.0		MXTFCV	$22,591
100	1800	460	400HP16	16”	1500	1370	1004FTVB3RW-A	116	95.4		MXTFCV	$21,511
100	1200	460	440HP16	16”	2020	1780	1006FTVB3RW-A	123	95.5		MXTFCV	$32,189
125	3600	460	440HP16	16”	1985	1030	1251FTVB3RW-A	139	95.3	5	MXTFCV	$32,781
125	1800	460	440HP16	16”	1900	1480	1254FTVB3RW-A	144	95.7		MXTFCV	$26,758
125	1200	460	440HP16	16”	2175	1740	1256FTVB3RW-A	156	95.5		MXTFCV	$38,913
150	3600	460	440HP16	16”	2200	1000	1501FTVB3RW-A	168	95.7	5	MXTFCV	$39,873
150	1800	460	440HP16	16”	2916	1430	1504FTVB3RW-A	176	95.8		MXTFCV	$32,681
150	1200	460	440HP16	16”	2470	1670	1506FTVB3RW-A	181	95.8		MXTFCV	$48,352
200	3600	460	440HP16	16”	2400	940	2001FTVB3RW-A	221	96.0	5	MXTFCV	$48,667
200	1800	460	440HP16	16”	2600	1350	2004FTVB3RW-A	232	96.2		MXTFCV	$45,673
200	1200	460	N449HP20	20”	3200	1710	2006FTVB3SW-A	234	96.2		MXTFCV	$65,625
250	3600	460	N449HP20	20”	4050	860	2501FTVB3SW-A	270	95.9	5	MXTFCV	$62,889
250	1800	460	N449HP20	20”	3600	1360	2504FTVB3SW-A	276	96.2		MXTFCV	$54,687
250	1200	460	N449HP20	20”	3200	1610	2506FTVB3SW-A	295	96.5		MXTFCV	$82,030
300	3600	460	N449HP20	20”	4100	820	3001FTVB3SW-A	325	95.8	5	MXTFCV	$75,467
300	1800	460	N449HP20	20”	3600	1340	3004FTVB3SW-A	328	96.2		MXTFCV	$65,625
300	1200	460	N449HP20	20”	3200	1570	3006FTVB3SW-A	354	96.5		MXTFCV	$98,438
350	3600	460	N449HP20	20”	4100	820	3501FTVB3SW-A	382	95.8	5	MXTFCV	$88,048
350	1800	460	N449HP20	20”	3600	1340	3504FTVB3SW-A	380	96.2		MXTFCV	$76,561
MEDIUM THRUST												
3	3600	460	180LP10	10”	500	125	0032FTVB3PX-A	3.4	89.9		MXTFCV	$6,145
3	1800	460	180LP10	10”	500	125	0034FTVB3PX-A	3.7	89.5		MXTFCV	$6,337
5	3600	460	180LP10	10”	500	150	0052FTVB3PX-A	5.7	89.8		MXTFCV	$6,684
5	1800	460	180LP10	10”	750	150	0054FTVB3PX-A	6.1	89.5		MXTFCV	$6,550
7.5	3600	460	210LP10	10”	580	200	Y752FTVB3PX-A	8.7	90.5		MXTFCV	$8,342
7.5	1800	460	210LP10	10”	850	200	Y754FTVB3PX-A	9.1	91.7		MXTFCV	$7,072
10	3600	460	210LP10	10”	640	250	0102FTVB3PX-A	11.4	90.2		MXTFCV	$9,101
10	1800	460	210LP	10”	900	250	0104FTVB3PX-A	12.0	91.8		MXTFCV	$7,718
15	3600	460	250LP10	10”	1250	542	0152FTVB3PX-A	16.6	91.6		MXTFCV	$10,676
15	1800	460	250LP10	10”	1580	400	0154FTVB3PX-A	18.2	92.4		MXTFCV	$10,117
15	1200	460	280LP10	10”	2000	500	0156FTVB3PX-A	18.6	92.3		MXTFCV	$10,573
20	3600	460	250LP10	10”	1240	425	0202FTVB3PX-A	21	92.5		MXTFCV	$12,015
20	1800	460	250LP10	10”	1560	400	0204FTVB3PX-A	24	93.1		MXTFCV	$10,814
20	1200	460	280LP10	10”	2200	500	0206FTVB3PX-A	25	91.7		MXTFCV	$11,864
25	3600	460	280LP10	10”	1230	475	0252FTVB3PX-A	28	92.4		MXTFCV	$12,209
25	1800	460	280LP10	10”	1570	500	0254FTVB3PX-A	29	93.8		MXTFCV	$11,590
25	1200	460	320LP16	16”	2290	650	0256FTVB3RX-A	62	93.0		MXTFCV	$13,856
30	3600	460	280LP10	10”	1220	550	0302FTVB3PX-A	33	92.4		MXTFCV	$12,722

Totally Enclosed Fan Cooled
Vertical P-Base Footless
Normal & Medium Thrust
NEMA Premium® Efficiency

HP	Speed (RPM)	Volts	Frame	BD Dimension	Max DownThrust Cap (lbs)	Weight (lbs.)	Model Number	FL Amps	Nominal FL EFF	Notes	Discount Symbol	List Price
30	1800	460	280LP10	10”	1580	500	0304FTVB3PX-A	34.9	93.6		MXTFCV	$12,172
30	1200	460	320LP16	16”	2380	700	0306FTVB3RX-A	37	93.6		MXTFCV	$15,188
40	3600	460	320LP16	16”	1840	600	0402FTVB3RX-A	45	93.1		MXTFCV	$14,325
40	1800	460	320LP16	16”	2320	650	0404FTVB3RX-A	47	94.1		MXTFCV	$13,981
40	1200	460	360LP16	16”	2540	850	0406FTVB3RX-A	48	94.1		MXTFCV	$16,290
50	3600	460	320LP16	16”	1830	600	0502FTVB3RX-A	56	93.0		MXTFCV	$15,375
50	1800	460	320LP16	16”	2300	700	0504FTVB3RX-A	60	94.5		MXTFCV	$15,349
50	1200	460	360LP16	16”	2670	920	0506FTVB3RX-A	61	94.1		MXTFCV	$19,206
60	3600	460	360LP16	16”	2080	780	0602FTVB3RX-A	69	93.8		MXTFCV	$17,473
60	1800	460	360LP16	16”	2610	1137	0604FTVB3RX-A	70	95.1		MXTFCV	$18,233
60	1200	460	400LP16	16”	3330	1500	0606FTVB3RX-A	72	95.0		MXTFCV	$22,284
75	3600	460	360LP16	16”	2070	900	0752FTVB3RX-A	85	93.6		MXTFCV	$17,755
75	1800	460	360LP16	16”	2600	950	0754FTVB3RX-A	88	95.4		MXTFCV	$18,815
75	1200	460	400LP16	16”	3280	1500	0756FTVB3RX-A	92.1	95.0		MXTFCV	$26,205
100	3600	460	400LP16	16”	2290	1300	1002FTVB3RX-A	112	95.0		MXTFCV	$23,495
100	1800	460	400LP16	16”	2880	1500	1004FTVB3RX-A	116	95.4		MXTFCV	$22,372
100	1200	460	440LP16	16”	3620	2020	1006FTVB3RX-A	123	95.5		MXTFCV	$32,833
125	3600	460	440LP16	16”	2480	1985	1251FTVB3RX-A	139	95.3	5	MXTFCV	$33,437
125	1800	460	440LP16	16”	3180	1900	1254FTVB3RX-A	144	95.7		MXTFCV	$27,293
125	1200	460	440LP16	16”	3580	2175	1256FTVB3RX-A	156	95.5		MXTFCV	$39,692
150	3600	460	440LP16	16”	2704	2450	1501FTVB3RX-A	168	95.7	5	MXTFCV	$40,670
150	1800	460	440LP16	16”	3130	2658	1504FTVB3RX-A	176	95.8		MXTFCV	$33,334
150	1200	460	440LP16	16”	3510	2470	1506FTVB3RX-A	181	95.8		MXTFCV	$49,319
200	3600	460	440LP16	16”	2400	2390	2001FTVB3RX-A	221	96.0	5	MXTFCV	$49,640
200	1800	460	440LP16	16”	3050	2600	2004FTVB3RX-A	232	96.2		MXTFCV	$46,587
200	1200	460	N449LP20	20”	3780	3200	2006FTVB3SX-A	234	96.2		MXTFCV	$67,593
250	3600	460	N449LP20	20”	4050	2490	2501FTVB3SX-A	270	95.9	5	MXTFCV	$64,777
250	1800	460	N449LP20	20”	3600	3270	2504FTVB3SX-A	276	96.2		MXTFCV	$56,328
250	1200	460	N449LP20	20”	3680	3200	2506FTVB3SX-A	295	96.5		MXTFCV	$84,492
300	3600	460	N449LP20	20”	4100	2440	3001FTVB3SX-A	325	95.8	5	MXTFCV	$77,733
300	1800	460	N449LP20	20”	3600	3250	3004FTVB3SX-A	328	96.2		MXTFCV	$67,593
300	1200	460	N449LP20	20”	3630	3200	3006FTVB3SX-A	354	96.5		MXTFCV	$101,391
350	3600	460	N449LP20	20”	4100	2440	3501FTVB3SX-A	382	95.8	5	MXTFCV	$90,689
350	1800	460	N449LP20	20”	3600	3250	3504FTVB3SX-A	380	96.2		MXTFCV	$78,859
350	1200	460	N449LP20	20”	3560	3200	3506FTVB3SX-A	414	96.5		MXTFCV	$118,288

FL Amps and FL EFF are average expected design values and not guaranteed.
The weights listed above are estimated.
Please contact Toshiba for information on product availability.
“CF” = Consult Factory

Low Voltage Modifications

Stock Modifications

Bearings **109**
- Sealed/Shielded Bearings 109
- Insulated Bearings 109
- Change Bearings 109

Blowers **109**

Conduit Box Modifications **110**
- Auxiliary Terminal Box 110
- Cast Iron Main Box 110
- Location 110
- Remote-Mount Conduit Box 110

Couplings & Sheaves Mounted **111**

Documentation **111**

Drains & Breathers **111**
- Breathers 111
- Additional Drain Holes 111

Drip Covers **112**

Enclosures **112**
- Marine Duty 112
- Classified-Class II Zone/Division II Locations 112

Export Crating **112**

Fan Covers **112**

Flange-Mounting **113**
- Open Drip-Proof Motors 113
- Totally Enclosed Fan Cooled Motors 113
- Totally Enclosed Explosion Proof 113

Grounding Provisions **113**
- External Grounding Provisions on Motor Frame (Base) 113
- External Grounding Pad on Motor Frame 113

Insulation Modifications **114**
- Tropicalized Coating on Motor Windings and Internal Surface 114
- Fungus-Proof Coating on Motor Windings 114
- Epoxy Coating on Motor Windings 114

Labels **114**

Lead Terminals **114**
- Crimp Lead Terminals 114
- Burndy Lugs/Two-Hole Terminals 114

Lubrication **115**
- High Temperature Grease 115
- Low Temperature Grease 115
- Special-Based Grease 115

Nameplate(s) **115**
- Duplicate or Special Nameplate 115

Screens **116**
- Screens to an Open Drip-Proof Motor 116

Service Factor **116**

Shaft Grounding Provisions **116**

Software: Engineering Data **117**

Space Heaters **117**

Terminal Blocks/Strips **117**

Thermal Protection **117**
- Resistance Temperature Detectors (RTDs) 117
- Thermostats (Klixons) 118
- Winding PTC Thermistors 118

Vertical Jacking Provisions **118**

Vertical Lifting Provisions **118**

Handling Charge

This section requires that the handling charge listed below be added to each motor that is to be modified in addition to the requested modifications.

Option		Handling Charge
Frame	56/143/145	$241
	182/184	$241
	213/215	$284
	254/256	$284
	284/286	$383
	324/326	$383
	364/365	$438
	404/405	$728
	444/445	$837
	447	$837
	449/500	$837
	5000/5800	$1,065

To obtain the list price for the modifications, the handling charge should be added to the modifications in this section. MTRMOD should be applied to the list price of the modifications to obtain the net price. Use the motor's applicable discount/multiplier to arrive at the motor's net price. Add the modifications net price to the motor's net price to generate the total net price.

Consult factory for modification availability on EQP Global IEC, EQP Global Brake, and EQP Global Cooling Tower products. Modifications are not available on Tosh-ECO motor series.

Bearings

Special bearings and designs are available on a production basis. Standard bearings can be changed for specific application requirements. The following list additions apply.

Sealed/Shielded Bearings

Open and totally enclosed general purpose motors on 250T frame and smaller contain shielded or sealed-type, non-regreasable bearings as standard. Contact Toshiba to determine actual stock design bearing information.

Option		Sealed Bearings
Frame	143/145	$219
	182/184	$219
	213/215	$273
	254/256	$273
	284/286	$328
	324/326	$328
	364/365	$514
	404/405	$820
	444/445	$875
	447	—
	449/500	—
	5000/5800	—

Special Notes:

- Bearings are lubed for life and cannot be regreased.
- Sealed bearings come standard on all 140 through 250 frame motors, except for all 841 products.

Insulated Bearings

Insulated bearings are typically applied in applications where shaft current concerns exist (i.e. applications involving the use of adjustable speed drives). Insulating the bearings helps to prevent electrical arcing (bearing fluting) and potential premature bearing failure.

Pricing below is for insulating the bearings on both end bells.

Option		Insulating Ball Bearings	Insulating Roller
Frame	143/145	$1,476	—
	182/184	$2,122	—
	213/215	$2,516	—
	254/256	$2,892	—
	284/286	$3,292	—
	324/326	$3,359	—
	364/365	$3,380	—
	404/405	$3,609	$6,978 (1)
	444/445	$3,938	$7,289 (1)
	447	$3,938	$7,289 (1)
	449/500	$4,375	$7,960 (1)
	5000	$6,016	$11,474 (1)
	5800	$6,525	$12,500 (1)

(1) Contact Toshiba for delivery. Availability of bearings may vary.

Special Notes:

- Insulating the bearings is recommended when shaft voltage exceeds 300 mV.
- It is up to the user to determine when insulated bearings are required, especially with the use of inverter-fed control. NEMA MG1 Part 31 suggests insulating the bearing(s) on all motors in 500 series frames and larger when inverter-fed.
- Toshiba suggests insulating both bearings on all frame sizes 440 and larger when used with adjustable speed drives.
- When insulated bearings are used on direct-coupled applications, the use of an insulated coupling and/or a shaft grounding brush is required in order to reduce the risk of driven equipment bearing damage. Grounding brushes are not suitable for Division 2 environments.
- Insulated bearings are not available on angular contact bearing construction.

If bearing thermal devices are required with insulated bearings, a special version of the thermal device will be required. Contact Toshiba for availability and price of this thermal device.

Change Bearings

Cylindrical roller bearings are used in horizontal motors where high radial loads are present for an improved L-10 life, i.e. belted applications. Ball bearings are to be used in coupled applications.

Option		Roller Bearings	Ball Bearings
Frame	143/145	—	
	182/184	—	
	213/215	—	
	254/256	$708	
	284/286	$926	
	324/326	$1,025	
	364/365	$1,090	
	404/405	$1,199	
	444/445	$1,550	$1,225
	447	$1,550	$1,225
	449/500	$1,775	$1,435
	5000/5800	—	$1,615

Special Notes:

- This is applicable only for 1800 RPM motors and slower.
- Roller bearing requests require that full belting/application details be provided prior to order acceptance.
- Adders above not available on explosion-proof product.
- Cast iron inner bearing cap required for roller bearings. All 841, 840 280 frame and larger, SD 400 frame and larger have cast iron bearing cap.

Blowers

Toshiba motors are suitable for use with inverter-fed controllers. Turndown capability is a function of the product selected. See individual product page for specific information. When turndown requirements exceed product capability, the use of an auxiliary blower is required. Contact Toshiba for help with determining whether a blower is required for an application.

The National Electrical Code 430.126 (a)(4) requires that motors with external forced ventilation must have a form of thermal protection. See “Thermal Protection” section for the addition of thermal protection. This addition is not included in the blower adder.

Option		Blower
Frame	143/145	$2,189
	182/184	$2,328
	213/215	$2,571
	254/256	$2,730
	284/286	$3,137
	324/326	$3,585
	364/365	$4,553
	404/405	$5,679
	444/445	$6,995
	447	$6,995
	449/500	$7,279
	5010	$7,618
	5810	$18,125
	5011/5811	Contact Toshiba

Special Notes:

- Adders above are not available on explosion proof product.
- Blower standard voltages are as follows:
  - » 140 through 280T frames—single-phase 230 to 330 V and three-phase 230 to 330/400 to 575 V
  - » 320 through N449T frames—three-phase 230 to 330/400 to 575 V
  - » 500 frame and larger – three-phase 460 or 575 V (specify at time of order)
- Blowers cannot operate on line voltages over 575 V.
- Contact Toshiba for applications requiring line voltages over 575 V.
- Blowers are not suitable for Division 2 applications. Contact Toshiba for availability in Division 2 applications.

Conduit Box Modifications

Toshiba's standard main conduit box on all motors is located in the F1 position, with the exception of oil well pump motors that have the main box located in the F2 position.

Auxiliary Terminal Box

Termination of protective or monitoring devices can be provided in a separate auxiliary box (280T frame and larger) or a condulet mounted off the main terminal box (250T frame and below). All auxiliary boxes are mounted on the same side as the main terminal box unless otherwise specified.

Option		Condulet	Auxiliary Cast Iron Box
Frame	56/143/145	$383	—
	182/184	$383	—
	213/215	$383	—
	254/256	$383	—
	284/286	$450	$766
	324/326	$450	$766
	364/365	$450	$766
	404/405	—	$766
	444/445	—	$766
	447	—	$766
	449/500	—	$766
	5000/5800	—	$766

Special Notes:

- Adders above are not available on explosion proof product.
- Auxiliary conduit box is provided as standard with stator RTD adder on all motors.

Cast Iron Main Box

Cast iron conduit boxes come standard on all explosion proof, EQP Global, and Quarry Duty products.

Option		Cast Iron Main Box
Frame	56/143/145	$123
	182/184	$123
	213/215	$149
	254/256	$149
	284/286	$219
	324/326	$219
	364/365	$328
	404/405	$328
	444/445	$602
	447	$602
	449/500	$656
	5000/5800	$1,094

Location

All motors are provided with the main terminal box in the F1 position, with the exception of oil well pump motors that have the main box located in the F2 position. For conduit box location in the F2 position, see adder below.

Option		F2 (Stock Modifications)	
		ODP	TEFC
Frame	56/143/145	$65	$65
	182/184	$65	$65
	213/215	$95	$95
	254/256	$95	$95
	284/286	$110	$110
	324/326	$110	$110
	364/365	$165	$165
	404/405	$220	$220 (1)
	444/445	$330	N/A
	S444/445	—	$220
	447	$330	N/A
	S4445/447	—	$330
	449	Production Only	$400
	500	Production Only	N/A
	N587	—	$400
	5000/5800	Production Only	$400

(1) New frame designs may be modifiable to F2 - Contact Toshiba.

Special Notes:

- Not all motors are modifiable to F2 assembly.

Remote-Mount Conduit Box

For applications requiring that the conduit box be located away from the motor, Toshiba is able to supply a remote-mount conduit box. The conduit box will be supplied with the main motor, but it will arrive unfastened. It includes a main terminal box and a threaded mounting plate on the motor and the conduit box.

Option		Cast Iron Conduit Box
Frame	56/143/145	$219
	182/184	$219
	213/215	$273
	254/256	$273
	284/286	$438
	324/326	$438
	364/365	$656
	404/405	$656
	444/445	$1,094
	447	$1,094
	449/500	$1,313
	5000/5800	$1,750

Special Note:

- Adders above are not available on explosion proof product.

Couplings & Sheaves Mounted

Couplings and V-belt sheaves must be supplied (finished bored, balanced, and key-seated) to Toshiba's shaft dimensions before they can be mounted to the motor. An incoming identification number must be obtained from Toshiba, and coupling must be shipped at least three weeks in advance before scheduled motor shipment and must include the manufacturer's mounting instructions.

Option		Customer-Supplied Sheave/Coupling
Frame	143/145	$656
	182/184	$656
	213/215	$766
	254/256	$875
	284/286	$875
	324/326	$875
	364/365	$984
	404/405	$984
	444/445	$1,500
	447	$2,100
	449/500	$2,600
	5000/5800	$2,750

Special Note:

- Incoming parts without a proper Toshiba identification number will not be accepted and will be instead returned to sender.

Documentation

See "Software" modifications section.

Drains & Breathers

Standard horizontally-mounted totally enclosed fan cooled and open motors are provided with drain holes. Drain holes are located at the lowest point on the motor.

Breathers

Option		Standard Breather (1)	UL Stainless Breather (2)	Standard Breather Conduit Box (3)
Frame	56/143/145	$219	$273	$273
	182/184	$219	$273	$273
	213/215	$219	$273	$273
	254/256	$328	$383	$383
	284/286	$328	$383	$383
	324/326	$328	$383	$383
	364/365	$328	$438	$438
	404/405	$328	$438	$438
	444/445	$328	$438	$438
	447	$328	$438	$438
	449/500	$328	$438	$438
	5000/5800	$328	$438	$438

(1) EQP Global 840 and 841 440 frames and below motors have tapped holes fitted with stainless steel T-drains located at the lowest point in the face of each bearing bracket or on the lowest point of the frame. 500 frames and above have dual tapped holes fitted with automatic bronze drain and breathers as standard.

(2) Explosion proof motors have UL-listed stainless steel drain and breathers as standard (for horizontal-mounting only).

(3) Standard and stainless breathers are available for cast conduit boxes only (not available on explosion proof motors).

Special Notes:

- Additional breathers are not available on explosion proof product.

Additional Drain Holes

Option		Drain Hole	Drain Hole Conduit Box (1)	Stainless T-Drain	Stainless T-Drain Conduit Box
Frame	56/143/145	$131	$131	$219	$219
	182/184	$131	$131	$219	$219
	213/215	$131	$131	$219	$219
	254/256	$131	$131	$328	$328
	284/286	$131	$131	$328	$328
	324/326	$131	$131	$328	$328
	364/365	$131	$131	$328	$328
	404/405	$131	$131	$328	$328
	444/445	$131	$131	$328	$328
	447	$131	$131	$328	$328
	449/500	$131	$131	$328	$328
	5000/5800	$131	$131	$328	$328

(1) Conduit box drain holes are available on cast conduit boxes only.

Special Notes:

- Above adders not available on explosion proof product.
- All EQP Global® products are provided with additional plugged drain provisions in each bearing bracket for vertical mounting configurations. Plugs must be removed for proper drainage of moisture.

Drip Covers

Drip covers can be furnished on standard motors for extra protection from dripping liquids and falling objects when the motor is mounted in the vertical shaft-down position. Standard drip covers are of fabricated steel ⅜" with lip.

Option		Drip Cover
Frame	56/143/145	$177
	182/184	$237
	213/215	$237
	254/256	$237
	284/286	$330
	324/326	$414
	364/365	$450
	404/405	$475
	444/445	$510
	447	$510
	449/500	$510
	5000/5800	$510

Special Notes:

- The drip cover adder does not include vertical lifting provisions.
- Vertical lifting provisions available on all EQP Global® round body motors. See Vertical lifting provisions in "Stock" Modification Section.

Enclosures

This section refers to additional specifications used to define the motor's enclosure. These adders may be required in order to provide a necessary additional degree of protection for normal operation in certain environments.

Marine Duty

EQP 840 and 841 products through N449T frame are nameplated IEEE45 Marine Duty as standard for below deck application.

Option		Above Deck (1)	Below Deck (2)
Frame	143/145	$383	—
	182/184	$383	—
	213/215	$405	—
	254/256	$438	—
	284/286	$645	—
	324/326	$700	—
	364/365	$853	—
	404/405	$1,083	—
	444/445	$1,291	—
	447	$1,542	—
	449/500	$1,542	$131
	5000/5800	$1,914	$131

(1) In above-deck applications, the adder includes space heaters with leads terminating in main terminal box and tropicalization in accordance with IEEE 45 requirements.
  - » IP56 Degree of protection is required
  - » Not available on EQP 840 280 frame and below

(2) In below-deck applications only, the nameplate changes.

Classified-Class II Zone/Division II Locations

This modification is for applications which require motors to be installed in Class II Division II hazardous zones. Once modified, the motors will be certified for Class II Division II, Groups F&G, T3B. Group E is not available.

Option		SD	840	841
Frame	143/145	$215	$235	$235
	182/184	$215	$235	$235
	213/215	$245	$270	$270
	254/256	$245	$270	$270
	284/286	$260	$286	$286
	324/326	$260	$286	$286
	364/365	$315	$345	$345
	404/405	$370	$410	$410
	444/445	$480	$524	$524
	447	$480	$524	$524
	449/500	$550	$605	$605
	5000/5800	$550	$605	$605

Special Note:

- Motors will retain the original Class I Division II certification. Refer to Division 2 capabilities from Appendix C.
- Once modified, motors will no longer carry CSA certification.
- Motors may not be modified with shaft grounding devices (i.e. rings, brushes) in conjuction with this modification.

Export Crating

Toshiba provides packaging options for different shipping requirements. Options include standard commercial packaging (for common, below-deck transport on ships) and containerized shipping. Both options are available at a net price of 8% of the motor's total sell price or a minimum of $350, whichever is greater.

Fan Covers

Cast Iron fan covers are available for totally enclosed fan cooled enclosures.

Option		Cast Iron Fan Cover (1)
Frame	56/143/145	$90
	182/184	$110
	213/215	$140
	254/256	$180
	284/286	$260
	324/326	$300
	364/365	$485
	404/405	$640
	444/445	$1000
	447	$1,500
	449	$2,200
	500	Contact Toshiba
	5000/5800	Contact Toshiba

(1) This feature is standard on EQP Global 840, EQP Global 841, Explosion Proof, and Vertical P-base Motors.

Flange-Mounting

Flanges can be ordered through production and are also available as kits. Contact Field Service for Spare Part Kits.

Open Drip-Proof Motors

Option		C-Face Footed (1)
Frame	143/145	$208 (2)
	182/184	$236 (2)
	213/215	$295
	254/256	$295
	284/286	$438
	324/326	$481
	364/365	$875
	404/405	$1,094
	444/445	$1,586
	447	$1,695
	449/500	$2,078
	5000/5800	—

(1) Motors do not meet NEMA BA dimensions.

(2) Adders above are not available on EQPIII Open Drip-Proof product.

Totally Enclosed Fan Cooled Motors

Option		C-Face Footed	D-Flange Footed
Frame	56/143/145	$109 (1, 2)	—
	182/184	$131 (1, 2)	—
	213/215	$175 (1, 2)	$547 (3)
	254/256	$263 (1, 2)	$875 (3)
	284/286	$438	$930 (3)
	324/326	$492	$1,422 (3)
	364/365	$820	$1,695 (3)
	404/405	$1,148	$2,078 (3)
	444/445	$1,477 (4)	$2,297 (3)
	447	$1,477 (4)	$2,297 (3)
	449/500	—	$2,734 (3)
	5000/5800	—	—

(1) Motors do not meet NEMA BA dimensions

(2) NEMA BA dimensions are available in Stock Catalog part numbers.

(3) Available on Global SD, 840, and 841 products only.

(4) Base motor must have ball bearings on DE.

Totally Enclosed Explosion Proof

Option		C-Face Footed
Frame	143/145	$241 (1)
	182/184	$273 (1)
	213/215	$328 (1)
	254/256	$438 (1)
	284/286	$766
	324/326	$875
	364/365	$984
	404/405	—
	444/445	—
	447	—
	449/500	—
	5000/5800	—

(1) Motors do not meet NEMA BA dimensions.

Grounding Provisions

All motor frames 140T through 5800 have a CSA clamp-type grounding lug in the conduit box. All EQPIII/Global 840 and 841 motors are provided with a UL-approved clamp-type grounding lug in the conduit box.

External Grounding Provisions on Motor Frame (Base)

All Global motors have an additional grounding provision on the motor base as standard. The grounding provisions on the motor base are ¼" - 20" UNC tap for frames 140T through 250T, ⅜" - 16" UNC tap on frames 280T through 447T, and ½" - 13" UNC for frames larger than 447T.

Option		Base Grounding
Frame	56/ 143/145	$219
	182/184	$219
	213/215	$219
	254/256	$219
	284/286	$219
	324/326	$219
	360	$219
	364/365	$219
	404/405	$219
	444/445	$219
	447	$219
	449/500	$219
	5000/5800	$219

Special Note:

- External grounding provisions are available for explosion proof product but must be used as supplementary ground connection in conjunction to the main equipment ground provision provided In the main terminal box.

External Grounding Pad on Motor Frame

Apply the adder below for a special ground pad with two holes mounted on the motor frame. When placing the order, the hole and tap size must be provided.

Option		Frame Grounding
Frame	56/ 143/145	—
	182/184	—
	213/215	—
	254/256	—
	284/286	—
	324/326	$1,641
	364/365	$1,641
	404/405	$1,641
	444/445	$1,641
	447	$1,641
	449/500	$1,641
	5000/5800	$1,641

Special Note:

- Adders above are not available on explosion proof product.

Insulation Modifications

Insulation systems are divided into classes according to the thermal endurance by temperature rating. Standard motor insulation comes non-hygroscopic Class F (utilizing Class H components) and is dipped and baked in a Class H varnish. Unusual or severe applications may require special insulation systems or winding protection.

Tropicalized Coating on Motor Windings and Internal Surface

This adder provides additional insulation coating as well as corrosion protection for all internal machined surfaces.

Option		Tropicalized Coating
Frame	56/143/145	$164
	182/184	$164
	213/215	$219
	254/256	$328
	284/286	$547
	324/326	$766
	364/365	$875
	404/405	$1,203
	444/445	$1,641
	447	$2,406
	449/500	$2,406
	5000/5800	$2,734

Special Note:

- This comes standard on all 840 and all 841 motors.

Fungus-Proof Coating on Motor Windings

Unwanted fungi may break down a motor's insulation system over time. The addition of the fungus-proof adder will protect motor windings from this type of problem.

Option		Fungus-Proof Coating
Frame	56/143/145	$109
	182/184	$109
	213/215	$164
	254/256	$219
	284/286	$328
	324/326	$438
	364/365	$547
	404/405	$711
	444/445	$930
	447	$1,203
	449/500	$1,203
	5000/5800	$1,531

Epoxy Coating on Motor Windings

This adder provides additional protection against corrosive and abrasive environments.

Option		Epoxy Coating
Frame	56/143/145	$164
	182/184	$164
	213/215	$219
	254/256	$328
	284/286	$547
	324/326	$766
	364/365	$875
	404/405	$1,203
	444/445	$1,641
	447	$2,406
	449/500	$2,406
	5000/5800	$2,734

Labels

See "Nameplates" section for information.

Lead Terminals

Crimp-type lead lugs/ring terminals come standard on motors as follows:

1. 210 frame and larger on all EQP 840 products
2. All EQP 841 products
3. All other 280 frame and larger motors

Crimp Lead Terminals

Option		Crimp
Frame	56/143/145	$109
	182/184	$109
	213/215	$153
	254/256	$153
	284/286	—
	324/326	—
	364/365	—
	404/405	—
	444/445	—
	447	—
	449/500	—
	5000/5800	—

Burndy Lugs/Two-Hole Terminals

Option		Burndy
Frame	56/143/145	—
	182/184	—
	213/215	—
	254/256	—
	284/286	$744
	324/326	$744
	364/365	$744
	404/405	$744
	444/445	$744
	447	$744
	449/500	$744
	5000/5800	$744

Lubrication

All bearings in motors with Class F insulation will be furnished with a lubricant that is capable of operating in ambient temperatures between –25˚ and 65˚C. Please note that it is not recommended to mix greases of different bases. The mixing of different types of thickeners may destroy the composition and physical properties of the grease.

High Temperature Grease

This adder is for applications in which the ambient temperature is greater than 65˚C.

Option		High Temp. Grease
Frame	143/145	$109
	182/184	$109
	213/215	$109
	254/256	$109
	284/286	$109
	324/326	$273
	364/365	$273
	404/405	$273
	444/445	$273
	447	$273
	449/500	$273
	5000/5800	$273

Low Temperature Grease

This adder is for applications in which the ambient temperature ranges from -25˚ to -40˚C.

Option		Low Temp. Grease
Frame	143/145	$109 (1)
	182/184	$109 (1)
	213/215	$109 (1)
	254/256	$109 (1)
	284/286	$109
	324/326	$273
	364/365	$273
	404/405	$273
	444/445	$273
	447	$273
	449/500	$273
	5000/5800	$273

(1) All sealed bearing design motors come standard with lithium based grease, suitable for -40°C ambient.

Special-Based Grease

This adder is for applications in which the customer specifies a grease other than the Toshiba standard. For other specific grease, contact Toshiba.

Nameplate(s)

Standard nameplates are 304-grade stainless steel with engraved lettering. Additional nameplates for remote-mounting and special markings are available. For requests other than what is listed below, contact Toshiba.

Duplicate or Special Nameplate

Option		Re-Nameplate	Duplicate Nameplate	Special ID Tag
Frame	56/143/145	$150	$150	$150
	182/184	$150	$150	$150
	213/215	$150	$150	$150
	254/256	$150	$150	$150
	284/286	$150	$150	$150
	324/326	$150	$150	$150
	364/365	$150	$150	$150
	404/405	$150	$150	$150
	444/445	$150	$150	$150
	447	$150	$150	$150
	449/500	$150	$150	$150
	5000/5800	$150	$150	$150

Screens

Corrosion-resistant screens covering air inlets and outlets of open drip-proof motors are available. Motors equipped with screens will meet the NEMA guarded definition.

Screens to an Open Drip-Proof Motor

Option		Corrosion-Resistant	Stainless Steel
Frame	143/145	$219	$273
	182/184	$273	$328
	213/215	$306	$361
	254/256	$361	$416
	284/286	$383	$438
	324/326	$438	$547
	364/365	$547	$766
	404/405	$766	$1,094
	444/445	$820	$1,203
	447	$875	$1,258
	449/500	$875	$1,258
	5000/5800	$1,094	$1,641

Special Note:

- Corrosion-resistant screens come standard on oil well pump motors.

Service Factor

Standard stock motors are designed for 1.15 service factor unless otherwise noted. Higher service factors are available if requested. Inquiries for service factors above 1.15 should be submitted to Toshiba for review. In certain cases, a higher service factor will require an increase in frame size or a special design.

Shaft Grounding Provisions

Shaft grounding provisions help to eliminate shaft currents that can be introduced into the motor through upstream controllers (i.e.: adjustable speed drives). These currents can potentially lead to premature failure of the bearings, commonly referred to as "fluting."

Option		Shaft Grounding Brush	Aegis Grounding Ring (1)
Frame	143/145	$1,367	$182
	182/184	$1,367	$208
	213/215	$1,367	$236
	254/256	$1,367	$290
	284/286	$1,367	$344
	324/326	$1,477	$398
	364/365	$1,641	$404
	404/405	$1,805	$597
	444/445	$2,187	$861
	447	$2,187	$861
	449/500	$2,187	$861
	5000/5800	$2,734	—

(1) For c-face motors with drive end installation - Contact Toshiba.

Special Notes:

- Adders above do not include insulated bearings.
- Adders above are not available on explosion proof product.
- Insulating the bearings is recommended when the shaft voltage exceeds 300 mV.
- It is up to the user to determine when insulated bearings are required, especially with the use of an inverter-fed control. NEMA MG1 Part 31 suggests insulating the bearing(s) on all motors in 500 series frames and larger that are inverter-fed.
- Shaft grounding rings may be used to divert the current around the bearing with the use of Inverter-fed control.
- Toshiba recommends the non-drive end bearing be insulated on all frame sizes 440 and larger, when used with adjustable speed drives.
- Insulated bearings are not available on angular contact bearing construction.
- Where insulated bearings are used on direct coupled applications the use of insulated coupling and/or shaft grounding brush is required to reduce the risk of driven equipment bearing damage.
  - » Shaft grounding provisions are not suitable for Division 2 environments.
  - » Division 2 suitability will be removed from the stock motor nameplate.
- If bearing thermal devices are required with the insulated bearing, a special version of the thermal device will be required.
- Contact Toshiba for availability and price.
- Adders above are suitable for drive end and non-drive end Installation.

Software: Engineering Data

Stock Modified

Upon request, Toshiba provides a standard data package for stock motors, at no charge. In addition, for stock modified motors, Toshiba will provide the following standard data package at no additional charge only if specified at the time of order: base general arrangement drawing, speed-torque and speed-current curve (at 100% rated voltage), nameplate data, performance data, connection diagram, instruction and maintenance manual, and spare bearings parts list.

Above data will be sent out in electronic format. If hard copy information is required, see the adder below. For software other than what is listed above or that is specified after time of order, see table below.

Prices below are NET adders per option.

Software	Price
Toshiba Standard Software Package After Acknowledgement (1)	$75
Non-Standard Speed-Torque & Speed-Current Curve	$75
Non-Standard Thermal Damage (Safe Stall Time) Curve	$75
Non-Standard Performance Curve	$75
Torsional Data (2)	$100
Non-Standard Dimensional Print	$75
Certificate of Compliance	$75
First Page of Customer Supplied Data Sheet (3)	$55
Additional Pages of Customer Supplied Data Sheet (3)	$40
One Hard Copy of Standard Software Package	$30
Express Shipping of Hard Copy of Standard Software Package	Standard Shipping Rates Apply
Other Special Request	Contact Toshiba

(1) This adder applies only if it is specified after the order has been entered and acknowledged.
(2) This adder will include shaft drawing, rotor assembly inertia, and shaft torsional stiffness values.
(3) This adder pertains to typical Toshiba performance data only.

Space Heaters

Space heaters are strip-type heaters mounted inside the frame near the coils to prevent moisture condensation in the motor during times the motor is not energized. Heater leads are brought out to the motor's main conduit box and marked H1 and H2. Standard heater voltage is 120 V single-phase unless otherwise specified.

Option		Standard	Division 2
Frame	56/143/145	$328	$492
	182/184	$328	$492
	213/215	$328	$492
	254/256	$328	$492
	284/286	$481	$722
	324/326	$481	$722
	364/365	$580	$870
	404/405	$700	$1,050
	444/445	$831	$1,242
	447	$941	$1,412
	449/500	$941	$1,412
	5000/5800	$1,148	$1,722

Special Note:
- Adders above are not available on explosion proof product.
- Standard Division 2 for 140-360 frames.

Terminal Blocks/Strips

Insulated stud-type terminal blocks/strips can be provided for single-voltage, single-speed applications in the standard conduit box.

Option		Terminal Block (1)	Terminal Strip (2)
Frame	56/143/145	$339	$219
	182/184	$339	$219
	213/215	$339	$219
	254/256	$339	$219
	284/286	$405	$219
	324/326	$733	$219
	364/365	$733	$219
	404/405	$733	$219
	444/445	$1,589	$219
	447	$1,589	$219
	449/500	$1,805	$219
	5000/5800	$2,527	$219

(1) This adder refers to power leads only.
(2) This adder refers to accessory leads only.

Special Note:
- Adders above are not available on explosion proof product.

Thermal Protection

Toshiba provides a wide variety of protective devices which are available as follows.

Resistance Temperature Detectors (RTDs)

Winding (Stator) RTDs – A set of six (two per phase, three leads) winding RTDs are provided with leads terminated in an auxiliary conduit box. Pricing below does not include readout device(s).

Option		Stator RTDs (Copper; 10 ohm)	Stator RTDs (Platinum; 100 ohm)	Stator RTDs (Nickel; 120 ohm)
Frame	143/145	—	—	—
	182/184	—	—	—
	213/215	—	—	—
	254/256	—	—	—
	284/286	$4,266	$4,266	$4,266
	324/326	$4,266	$4,266	$4,266
	364/365	$4,266	$4,266	$4,266
	404/405	$4,266	$4,266	$4,266
	444/445	$4,266	$4,266	$4,266
	447	$4,266	$4,266	$4,266
	449/500	$4,266	$4,266	$4,266
	5000/5800	$4,266	$4,266	$4,266

Special Note:
- Contact Toshiba for pricing on other RTD types.
- This adder is not available on explosion proof motors.
- RTDs will be installed on winding end turns, not embedded in windings.

Thermostats (Klixons)

Toshiba's standard offering includes a normally-closed (NC), bi-metallic, temperature actuated element mounted on the stator winding. Leads are marked P1 and P2. Termination of the leads is in the main conduit box. Special thermostats are available upon request. Contact Toshiba for pricing and availability.

Option		Hermetically Sealed - NC (1, 2)	Klixon-NC (2)
Frame	56/143/145	$328	—
	182/184	$328	—
	213/215	$328	—
	254/256	$328	—
	284/286	$328	—
	324/326	$459	—
	364/365	$459	—
	404/405	$656	—
	444/445	$656	—
	447	$809	—
	449/500	$809	$608
	5000/5800	$875	$657

(1) Contact Toshiba for Normally Open option.
(2) TEFC motors below 447 frame are nameplated suitable for Division 2 environments, hermetically sealed thermostats are required.

Special Note:

- Klixons will be installed on end turns.

Winding PTC Thermistors

Non-linear resistance temperature detectors are mounted on the motor winding. This thermal protection consists of three thermistors only or three thermistors with a solid state control relay. The provided control relay is intended for mounting in a remote location.

Option		Mark A (PTC) Thermistor	Mark A (PTC) Thermistor & Module
Frame	56/143/145	$328	$1,367
	182/184	$328	$1,367
	213/215	$328	$1,367
	254/256	$328	$1,367
	284/286	$328	$1,367
	324/326	$328	$1,367
	364/365	$328	$1,367
	404/405	$328	$1,367
	444/445	$328	$1,367
	447	$328	$1,367
	449/500	$328	$1,367
	5000/5800	$328	$1,367

Special Note:

- Adders above are not available for stock modification on explosion proof product.
- Thermistors will be installed on winding end turns.

Vertical Jacking Provisions

Vertical jacking is used to assist in the proper alignment of the motor shaft with the driven equipment for shimming purposes. Provisions for four jacking bolts (one per foot) are provided. Jacking bolts are to be supplied by the customer.

Option		Vertical Jacking (1)
Frame	143/145	$545
	182/184	$545
	213/215	$650
	254/256	$650
	284/286	$780
	324/326	$875
	364/365	$875
	404/405	$984
	444/445	$984
	447	$984
	449/500	$1,203
	5000/5800	$1,203

Special Note:

- This adder comes standard on totally enclosed fan cooled frames 5011/5811.

Vertical Lifting Provisions

This modification provides vertical lifting provisions for standard footless motors that are mounted vertical shaft down only.

Option		Vertical Lifting (1)
Frame	143/145	$328
	182/184	$394
	213/215	$394
	254/256	$547
	284/286	$547
	324/326	$755
	364/365	$755
	404/405	—
	444/445	—
	449/500	—
	5000/5800	—

(1) Vertical lifting available on roundbody EQP Global® footless.

Special Notes:

- Above adders are not available on drip proof or explosion proof motors, and are not available on any foot-mounted motors.
- It is recommended that if a motor is mounted vertically shaft down, a drip-cover also be provided (See "Drip-Cover" section).

Low Voltage Modifications
Production Price List

For “Build to Order” production motors 140-440 the list prices below are to be used. For frames 500 and above the list price is obtained from the applicable Stock Motor section of the catalog.

Use the multiplier symbol of the motor to obtain the net price of the motor. Use the modification multiplier symbol MTRMOD to obtain the net price of the modifications. Add them together to generate the “TOTAL NET PRICE”

Contact Toshiba for any potential configured items not listed.

HP	Speed (RPM)	Frame	SD List	840 List	841 List
			MXTFCG	MXT40G	MXT41G
1	3600	143T	N/A	N/A	N/A
1	1800	143T	$1,282	$1,388	$1,679
1	1200	145T	$1,594	$1,727	$2,089
1	900	182T	$2,054	$2,227	$2,524
1.5	3600	143T	$1,451	$1,572	$1,902
1.5	1800	145T	$1,407	$1,524	$1,844
1.5	1200	182T	$1,702	$1,843	$2,230
1.5	900	184T	$2,367	$2,552	$2,853
2	3600	145T	$1,689	$1,829	$2,213
2	1800	145T	$1,532	$1,659	$2,007
2	1200	184T	$1,971	$2,134	$2,582
2	900	213T	$3,120	$3,363	$3,760
3	3600	182T	$1,870	$2,025	$2,451
3	1800	182T	$1,716	$1,858	$2,249
3	1200	213T	$2,275	$2,464	$2,981
3	900	215T	$3,639	$3,923	$4,385
5	3600	184T	$1,962	$2,125	$2,572
5	1800	184T	$1,698	$1,839	$2,226
5	1200	215T	$2,695	$2,919	$3,532
5	900	254T	$4,034	$4,348	$4,861
7.5	3600	213T	$1,999	$2,165	$2,620
7.5	1800	213T	$1,814	$1,964	$2,377
7.5	1200	254T	$3,089	$3,345	$4,048
7.5	900	256T	$5,090	$5,487	$6,135
10	3600	215T	$2,286	$2,476	$2,996
10	1800	215T	$2,208	$2,391	$2,893
10	1200	256T	$3,773	$4,086	$4,944
10	900	284T	$5,943	$6,406	$7,162
15	3600	254T	$3,143	$3,404	$4,119
15	1800	254T	$2,979	$3,226	$3,904
15	1200	284T	$5,290	$5,729	$6,932
15	900	286T	$7,735	$8,338	$9,322
20	3600	256T	$3,878	$4,200	$5,082
20	1800	256T	$3,680	$3,985	$4,822
20	1200	286T	$6,195	$6,709	$8,118

HP	Speed (RPM)	Frame	SD List	840 List	841 List
			MXTFCG	MXT40G	MXT41G
20	900	324T	$9,455	$10,192	$11,395
25	3600	284TS	$4,995	$5,410	$6,546
25	1800	284T	$4,463	$4,833	$5,848
25	1200	324T	$7,896	$8,551	$10,347
25	900	326T	$10,994	$11,851	$13,250
30	3600	286TS	$5,577	$6,040	$7,308
30	1800	286T	$5,366	$5,811	$7,032
30	1200	326T	$9,180	$9,942	$12,030
30	900	364T	$13,011	$14,026	$15,681
40	3600	324TS	$7,231	$7,831	$9,476
40	1800	324T	$6,938	$7,514	$9,092
40	1200	364T	$12,011	$13,008	$15,740
40	900	365T	$15,735	$16,962	$18,964
50	3600	326TS	$9,547	$10,339	$12,511
50	1800	326T	$8,461	$9,163	$11,088
50	1200	365T	$14,022	$15,186	$18,375
50	900	404T	$18,800	$20,266	$22,613
60	3600	364TS	$11,766	$12,743	$15,419
60	1800	364T	$11,924	$12,914	$15,626
60	1200	404T	$13,746	$14,887	$18,013
60	900	405T	$21,475	$23,150	$25,882
75	3600	365TS	$14,816	$16,046	$19,415
75	1800	365T	$15,362	$16,637	$20,130
75	1200	405T	$15,147	$16,404	$19,849
100	3600	405TS	$14,144	$15,318	$18,535
100	1800	405T	$13,149	$14,240	$17,231
100	1200	444T	$19,098	$20,279	$22,087
125	3600	444TS	$20,407	$21,738	$23,755
125	1800	444T	$16,734	$18,182	$21,434
125	1200	445T	$20,159	$22,013	$26,862
150	3600	445TS	$21,648	$23,844	$27,710
150	1800	445T	$18,867	$20,422	$24,918
150	1200	447T	$22,991	$25,367	$30,054
200	3600	447TS	$26,798	$28,727	$35,052
200	1800	447T	$22,677	$24,840	$30,312

Production modifications not applicable to EQP Global® motors 140 through 440 frame (use production price on page 119).

Low Voltage Modifications

Production Modifications

Altitude **122**
Ambient Temperature **122**
Balance/Vibration **122**
Bases (Adjustable) **122**
Bearings **122**
Sealed/Shielded Bearings 122
Sleeve Bearings 122
Insulated Bearings 122
Regreasable or Locked Bearings 123
Change Bearings 123
Blowers **123**
Brakes **124**
CE Approval **124**
Conduit Box Modifications **124**
Auxiliary Terminal Box 124
Cast Iron Main Box 124
Location 124
Remote-Mount Conduit Box 124
Connections **124**
Couplings & Sheaves Mounted **125**
Current Transformers **125**
Documentation **125**
Dowel Pin Provisions **125**
Drains & Breathers **125**
Additional Drain Holes 125
Breathers 125
Drip Covers **126**
Enclosures **126**
Marine Duty 126
Mill & Chemical Construction 126
Petro-Chemical Construction 126
Classified-Division 2/Zone 2 Locations 126
Encoders **127**
Export Crating **127**
Fan Covers **127**
Flange-Mounting **127**
Open Drip-Proof Motors 127
Totally Enlosed Fan Cooled Motors 128
Totally Enlosed Explosion Proof Motors 128
Frequency **128**
Grease Fittings **128**
Grounding Provisions **128**
External Grounding Provisions on Motor Frame (Base) 128
External Grounding Pad to Motor Frame 128
Grounding Provisions to Motor Shaft 128
Hardware **129**
Insulation Modifications **129**
Upgrade to Class H Insulation System 129
Tropicalized Coating on Motor Winding & Internal Surface 129
Fungus-Proof Coating on Motor Windings 129
Encapsulate Windings 130
Epoxy Coating on Motor Windings 130
Labels **130**
Lead Length/Lead Terminals **130**
Crimp Terminals 130
Burndy Lugs/Two-Hole Terminals 130
Longer Lead Length than Standard 130
Neutral Lead (Three-Lead Plus a Neutral) 130
Lubrication **131**
High Temperature Grease 131
Low Temperature Grease 131
Oil-Mist 131
Special-Based Grease Requirements 131
Nameplates **131**
Duplicate or Special Nameplates 131
Paint **132**
Screens **132**
Screens to an Open Drip-Proof Motor 132
Seals **132**
Service Factor **133**
Shafts **133**
NEMA Double-Shaft 133
NEMA TS-Shaft to NEMA T-Shaft 133
NEMA TS Short Shaft 133
Special Shaft (Non-NEMA) 133
Shaft Seals **133**
Shaft Grounding Provisions **134**
Software: Engineering Data **134**
Space Heaters **135**
Starting/Connection **135**
Surge Protection **135**
Terminal Blocks/Strips **135**
Testing **136**
Thermal Protection **136**
Thermostats (Klixons) 136
Winding PTC Thermistors 136
Thermocouples 137
Resistance Temperature Detectors (RTDs) 137
Torque **137**
Vertical Jacking Provisions **138**
Vertical Lifting Provisions **138**
Vibration Detectors **138**
Voltage **138**
Windings (Special) **138**

Altitude

Standard designs are built for operation up to 3,300 ft. (1000 m) above sea level at a maximum ambient temperature of 40°C. Altitudes over 3,300 ft. may affect frame size. Please contact Toshiba to confirm.

Ambient Temperature

Toshiba motors are designed to operate in an ambient temperature range between -25° and 40°C (-13°F and 104°F). For operation in temperatures above or below the standard, contact Toshiba.

Special Notes:

- Non-standard ambient temperatures may affect frame size and insulation class. Please contact Toshiba to confirm.
- Maximum ambient for explosion proof motors when operated on adjustable speed drives is 50°C.

Balance/Vibration

All Toshiba motors are dynamically balanced and measured in accordance with NEMA MG1 standards unless otherwise specified by the design. Toshiba motors all have a standard vibration level of 0.12 inches/second. See adder below for vibration levels lower than the Toshiba standard.

Option		Precision 0.08 in/sec. (1, 2)	Precision 0.04 in/sec. (3, 4)	Special Balance Requirements
Frame	143/145	$284	$438	Contact Toshiba
	182/184	$284	$438	
	213/215	$284	$438	
	254/256	$328	$492	
	284/286	$328	$492	
	324/326	$383	$602	
	364/365	$383	$820	
	404/405	$492	$1,203	
	444/445	$492	$1,641	
	447	$930	$2,188	
	449/500	$930 (5)	$2,734 (5)	
	5000/5800	$984 (5)	$3,281 (5)	
	5011/5811	—	—	

(1) This vibration level is standard on all 840 products through 447 frame.
(2) This vibration level is standard on all 841 products.
(3) This vibration level is not available on Toshiba P-Base products. This precision level of vibration is not available for motors with roller bearings.
(4) This vibration level is not available on 5011/5811 frames.
(5) Contact Toshiba for 3600 RPM (2-pole motors).

Bases (Adjustable)

Contact Field Service for Spare Part Kits.

Bearings

Special bearings and designs are available on a production basis. Standard bearings can be changed for specific application requirements. The following list additions apply.

Sealed/Shielded Bearings

Open and totally enclosed general purpose motors on 250T frame and smaller contain shielded or sealed-type, non-regreasable bearings as standard. Contact Toshiba to determine actual stock design bearing information.

Option		Sealed Bearings
Frame	143/145	—
	182/184	—
	213/215	—
	254/256	—
	284/286	$328
	324/326	$328
	364/365	$514
	404/405	$820
	444/445	—
	447	—
	449/500	—
	5000/5800	—

Special Notes:

- Bearings are lubricated for life and cannot be regreased.
- Sealed bearings come standard on all 140 through 250 frame motors, except for all 841 products.

Sleeve Bearings

Contact Low Voltage Motor Application Support for price and availability.

Insulated Bearings

Insulated bearings are typically applied in applications where shaft current concerns exist (i.e. applications involving the use of adjustable speed drives). Insulating the bearings helps to prevent electrical arcing (bearing fluting) and potential premature bearing failure.

Pricing below is for insulating the bearings on both end bells.

Option		Insulating Ball Bearings	Insulating Roller
Frame	143/145	$1,476	—
	182/184	$2,122	—
	213/215	$2,516	—
	254/256	$2,892	—
	284/286	$3,292	—
	324/326	$3,359	—
	364/365	$3,380	—
	404/405	$3,609	$6,978 (1)
	444/445	$3,938	$7,289 (1)
	447	$3,938	$7,289 (1)
	449/500	$4,375	$7,960 (1)
	5000	$6,016	$11,474 (1)
	5800	$6,525	$12,500 (1)

(1) Contact Toshiba for delivery. Availability of bearings may vary.

Special Notes:

- Insulating the bearings is recommended when shaft voltage exceeds 300 mV.
- It is up to the user to determine when insulated bearings are required, especially with the use of inverter-fed control. NEMA MG1 Part 31 suggests insulating the bearing(s) on all motors in 500 series frames and larger when inverter-fed.
- Toshiba suggests insulating both bearings on all frame sizes 440 and larger when used with adjustable speed drives.
- When insulated bearings are used on direct-coupled applications, the use of an insulated coupling and/or a shaft grounding brush is required in order to reduce the risk of driven equipment bearing damage. Grounding brushes are not suitable for Division 2 environments.
- Insulated bearings are not available on angular contact bearing construction.
- If bearing thermal devices are required with insulated bearings, a special version of the thermal device will be required. Contact Toshiba for availability and price of this thermal device.

Regreasable or Locked Bearings

Regreasable and locked bearings come standard in all 280T frame and larger motors.

Option		Regreasable (1)	Locked (2)
Frame	143/145	$164	$164
	182/184	$164	$164
	213/215	$219	$219
	254/256	$219	$219
	284/286	Toshiba Standard	Toshiba Standard
	324/326		
	364/365		
	404/405		
	444/445		
	447		
	449/500		
	5000/5800		

(1) This comes standard on all 841 motors.
(2) This comes standard on 280 frame and larger on all 840 motors, and is standard on all 841 motors.

Special Notes:

- Adders above are not available on explosion proof product.
- If special end-play tolerances with bearing lock nuts are required, contact Toshiba for pricing.

Change Bearings

Cylindrical roller bearings are used in horizontal motors where high radial loads are present for an improved L-10 life, i.e. belted applications.

Option		Roller Bearings
Frame	143/145	—
	182/184	—
	213/215	—
	254/256	$708
	284/286	$926
	324/326	$1,025
	364/365	$1,090
	404/405	$1,199
	444/445	(1)
	447	(1)
	449/500	(1)
	5000/5800	(1)

(1) Roller Bearing standard for belt drive motors.

Special Notes:

- This is applicable only for 1800 RPM motors and slower.
- Roller bearing requests require that full belting/application details be provided prior to order acceptance.
- Adders above not available on explosion proof product.

Blowers

Toshiba motors are suitable for use with inverter-fed controllers. Turndown capability is a function of the product selected. See individual product page for specific information. When turndown requirements exceed product capability, the use of an auxiliary blower is required. Contact Toshiba for help with determining whether a blower is required for an application.

The National Electrical Code 430.126 (A) (4) mandates that motors with external-force ventilation have a form of thermal protection. See “Thermal Protection” section for the addition of thermal protection. This addition is not included in the blower adder.

Option		Blower
Frame	143/145	$2,189
	182/184	$2,328
	213/215	$2,571
	254/256	$2,730
	284/286	$3,137
	324/326	$3,585
	364/365	$4,553
	404/405	$5,679
	444/445	$6,995
	447	$6,995
	449/500	$7,279
	5010	$7,618
	5810	$18,125
	5011/5811	Contact Toshiba

Special Notes:

- Adders above are not available on explosion proof product.
- Blower standard Voltages as follows:
  - » 140 through 280T frames — single-phase 218 to 290 V and three-phase 209 to 340/361 to 603 V
  - » 320 through 5800 frames — three-phase 230 to 330/400 to 575 V
- On 320 frame motors and larger, blowers cannot operate on line voltages over 575 V.
- Contact Toshiba for applications requiring line voltages over 575 V.
- Blowers not available for Division 2 applications.

Brakes

Toshiba offers a brake motor series in up to 280 frame to cover applications with brake needs. Please see the Definite Purpose, Brake Motor section of the catalog. For brake motors above this, please contact Toshiba for availability.

Special Notes:

- Brakes are available for Division 1 and Division 2 applications for 140 through 250 frames. Contact Toshiba for price and availability.
- 140 through 180 frames are suitable for vertical mount without modifications.

CE Approval

CE approved motors are available on select ratings. Contact Toshiba for information.

Conduit Box Modifications

Toshiba's standard main conduit box on all motors are located in the F1 position, with the exception of oil well pump motors that have the main box located in the F2 position. (See TEFC Top Mount section of catalog for F3.)

Auxiliary Terminal Box

Termination of protective or monitoring devices can be provided in a separate auxiliary box (280 frame and larger) or a condulet mounted off the main terminal box (250T frame and below). All auxiliary boxes are mounted on the same side as the main terminal box unless otherwise specified.

Option		Condulet	Auxiliary Cast Iron Box
Frame	143/145	$383	—
	182/184	$383	—
	213/215	$383	—
	254/256	$383	—
	284/286	$450	$766
	324/326	$450	$766
	364/365	$450	$766
	404/405	—	$766
	444/445	—	$766
	447	—	$766
	449/500	—	$766
	5000/5800	—	$766

Special Notes:

- Adders above are not available on explosion proof product.
- Auxiliary conduit box is provided as standard with stator RTD adder on all motors.

Cast Iron Main Box

Cast iron conduit boxes come standard on all Explosion Proof, EQP Global®, and Quarry Duty Products. Cast iron conduit boxes also come standard on 500 frame and larger quarry duty products and all TEFC 5000 frames and above.

Location

All motors are provided with the main terminal box in the F1 position, with the exception of oil well pump motors that have the main box located in the F2 position. For conduit box location in the F2 position, see adder below.

Option		F2 (Production)	F3 (Top-Mount)
Frame	143/145	No Charge	See TEFC Top Mount Section of Catalog for F3
	182/184	No Charge	
	213/215	No Charge	
	254/256	No Charge	
	284/286	No Charge	
	324/326	No Charge	
	364/365	No Charge	
	404/405	No Charge	
	444/445	No Charge	
	447	No Charge	
	449/500	No Charge	
	5000/5800	No Charge	

Special Notes:

- Not all motors are field-modifiable to F2 assembly.
- See "Applications" section for F2 field-modifiability.

Remote-Mount Conduit Box

For applications requiring that the conduit box be located away from the motor, Toshiba is able to supply a remote-mount conduit box. The conduit box will be supplied with the main motor, but will arrive unfastened. The remote-mount conduit box includes a main terminal box and a threaded mounting plate on the motor and the conduit box.

Option		Cast Iron Conduit Box
Frame	143/145	$219
	182/184	$219
	213/215	$273
	254/256	$273
	284/286	$438
	324/326	$438
	364/365	$656
	404/405	$656
	444/445	$1,094
	447	$1,094
	449/500	$1,313
	5000/5800	$1,750

Special Note:

- Adders above are not available on explosion proof products.

Connections

For various motor connections (Y-delta, part-winding, etc.), see "Starting/Connection" modifications section.

Couplings & Sheaves Mounted

Couplings and V-belt sheaves must be supplied (finished bored, balanced, and key-seated) to Toshiba's shaft dimensions before they can be mounted to a motor. An incoming identification number must be obtained from Toshiba, and coupling must be shipped at least three weeks in advance before scheduled motor shipment, and must include manufacturer's mounting instructions.

Option		Customer Supplied Sheave/Coupling
Frame	143/145	$656
	182/184	$656
	213/215	$766
	254/256	$875
	284/286	$875
	324/326	$875
	364/365	$984
	404/405	$984
	444/445	$1,500
	447	$2,100
	449/500	$2,600
	5000/5800	$2,750

Special Note:

- Incoming parts without a proper Toshiba identification number will not be accepted and will be returned to sender.

Current Transformers

See "Surge Protection" modifications section.

Documentation

See "Software" modifications section.

Dowel Pin Provisions

Dowel pin holes will be provided on both sides of the motor drive end. These are provided to ensure motor alignment is maintained after the motor is installed. This feature comes standard on totally enclosed fan cooled 5011 and 5811 frames.

Option		Two Per Motor
Frame	143/145	$547
	182/184	$547
	213/215	$547
	254/256	$656
	284/286	$656
	324/326	$766
	364/365	$766
	404/405	$930
	444/445	$930
	447	$984
	449/500	$1,094
	5000/5800	$1,313

Special Note:

- If four holes are required, one on each motor foot, double the above adder.

Drains & Breathers

Standard horizontally-mounted totally enclosed fan cooled and open motors are provided with drain holes. Drain holes are located at the lowest point on the motor.

Additional Drain Holes

For additional drain hole(s), see adder below.

Option		Drain Hole	Drain Hole Conduit Box (1)	Stainless T-Drain	Stainless T-Drain Conduit Box (1)
Frame	143/145	$131	$131	$219	$219
	182/184	$131	$131	$219	$219
	213/215	$131	$131	$219	$219
	254/256	$131	$131	$328	$328
	284/286	$131	$131	$328	$328
	324/326	$131	$131	$328	$328
	364/365	$131	$131	$328	$328
	404/405	$131	$131	$328	$328
	444/445	$131	$131	$328	$328
	447	$131	$131	$328	$328
	449/500	$131	$131	$328	$328
	5000/5800	$131	$131	$328	$328

(1) Conduit box drain holes are available on cast conduit boxes only.

Special Notes:

- Adders above are not available on explosion proof products.
- All EQP Global® products are provided with additional plugged drain provisions in each bearing bracket for vertical mounting configurations. Plugs must be removed for proper drainage of moisture.

Breathers

To request breather(s) be added to a motor, see adder below.

Option		Standard Breather (1)	UL Stainless Breather (2)	Standard Breather Conduit Box (3)
Frame	143/145	$219	$273	$273
	182/184	$219	$273	$273
	213/215	$219	$273	$273
	254/256	$328	$383	$383
	284/286	$328	$383	$383
	324/326	$328	$383	$383
	364/365	$328	$438	$438
	404/405	$328	$438	$438
	444/445	$328	$438	$438
	447	$328	$438	$438
	449/500	$328	$438	$438
	5000/5800	$328	$438	$438

(1) All 840 and all 841 motors are equipped with either an automatic bronze drain and breather or stainless steel T-drains as standard.
(2) Explosion proof motors have UL-listed stainless steel drain and breathers as standard (for horizontal mounting only). For vertical mounting, apply list adder "UL Stainless Breather" located in the lowest point in the bearing bracket.
(3) Standard and stainless breathers are available for cast iron conduit boxes only (not available on explosion proof motors).

Special Notes:

- EQP Global® 840 and 841 motors have tapped holes fitted with stainless steel T-drains located at at the lowest point in the face of each bearing bracket (140 through 210 frames) or on the lowest point of the frame (250 through 360 frames).
- Additional breathers are not available on explosion proof product for vertical mounting.

Drip Covers

Drip covers can be furnished on standard TEFC motors for extra protection from dripping liquids and falling objects when the motor is mounted in the vertical shaft-down position. Severe duty drip covers are of fabricated steel ⅜" with lip.

Option		Steel - Severe Duty	Explosion Proof Motors
Frame	143/145	$177	$177
	182/184	$237	$237
	213/215	$237	$237
	254/256	$237	$237
	284/286	$330	$330
	324/326	$414	$414
	364/365	$450	$450
	404/405	$475	$475
	444/445	$510	$510
	447	$510	$510
	449/500	$510	$510
	5000/5800	—	—

Special Notes:

- The drip cover adder does not include vertical lifting provisions.
- If lifting provisions are required, see "Vertical Lifting" modifications section.

Enclosures

This section refers to additional specifications used to define the motor's enclosure. These adders may be required in order to provide a necessary additional degree of protection for normal operation in certain environments.

Marine Duty

Marine Duty IEEE 45 must be incorporated into an EQP Series 840 or 841 base motor. Please see adders below.

Option		IEEE 45 (1)	IEEE 45 (2)	ABS Type (3, 5)	ABS Unit (4, 5)
Frame	143/145	$383	Standard on 840 & 841 Products	$438	Contact Toshiba
	182/184	$383		$438	
	213/215	$405		$438	
	254/256	$438		$438	
	284/286	$645		$438	
	324/326	$700		$438	
	364/365	$853		$438	
	404/405	$1,083		$438	
	444/445	$1,291		$438	
	447	$1,542		$438	
	449/500	$1,542		$438	
	5000/5800	$1,914		—	

(1) In above-deck applications the adder includes space heaters with leads terminating in main terminal box and tropicalization in accordance with IEEE 45 requirements.
  » IP56 degree of protection is required
(2) In below-deck applications, the EQP Series product meets requirement as standard.
(3) ABS Type Approval – Includes a new nameplate with the ABS marking. Included on this nameplate is the IEEE 45/Marine Duty stamping and the IP rating.
(4) ABS Unit Approval – Contact Toshiba for clarification, pricing, and product availability.
(5) ABS is not available on EQP Global® series product 140 through 360 frames.

Special Note:

- EQP 840 and EQP 841 products through N449T frame are nameplated IEEE 45 Marine Duty as standard.

Mill & Chemical Construction

See the General Purpose TEFC EQP Global® 840 sections of the price guide for base motor product meeting this requirement.

Petro-Chemical Construction

See the General Purpose TEFC EQP Global® 841 sections of the price guide for base motor products meeting this requirement.

Classified-Division 2/Zone 2 Locations

Environmental/application conditions may require a special motor design and special labeling of the product to ensure proper protection and/or safety during use. If an environment and/or application has been identified as a Division 2 or Zone 2 location, Toshiba requires that a Class, Group, and Temperature code (T-code) be provided to ensure safe operation in the specified atmosphere. The adder below must be applied to the EQPIII or EQP Global® base motor list price of the proper frame size to meet the temperature code requirement (contact Toshiba for the correct motor sizing).

Option		Class I, Division 2 (1)	Class II, Division 2 (2, 3, 4)
Frame	143/145	No Charge	No Charge
	182/184	No Charge	No Charge
	213/215	No Charge	No Charge
	254/256	No Charge	No Charge
	284/286	No Charge	No Charge
	324/326	No Charge	No Charge
	364/365	No Charge	No Charge
	404/405	No Charge	No Charge
	444/445	No Charge	No Charge
	447	No Charge	No Charge
	449/500	No Charge	No Charge
	5000/5800	No Charge	No Charge

(1) Refer to Division 2 capabilities from Appendix C.
(2) This must be incorporated into a Global Series product.
(3) CSA certification not available for Class II, Division 2. Class II certification can be made available through special acceptance. Contact Toshiba for pricing and delivery.
(4) Groups F & G, T3B temperature code. Group E not available.

Special Notes:

- For Division 1 applications, see "Totally Enclosed Explosion Proof" section of the price guide or contact Toshiba.
- Suitability of Zone 2 application is based on the National Electric Code (NEC).
- Refer to Motor Appendix C for Division 2 reference tables.

Encoders

Encoders are used to regulate speed on motors linked to variable speed applications, and they are available either face-mounted or shaft-mounted. Toshiba's standard offering is a BEI HS35 (shaft-mount) or Avtron M56 (face-mount). All prices below are based on Pulse Per Revolution (PPR) of 1024 single-output and dual-channel (A & B) quadrature. Encoder type must be specified upon order.

Option		NorthStar SL56 (2, 3)	NorthStar HSD38 (1)	NorthStar ISD37 (1, 4)	Avtron AV56 (2, 3)	Avtron HS45 (1)
Frame	143/145	$3,391	$2,406	$3,281	$3,391	$4,310
	182/184	$3,391	$2,406	$3,281	$3,391	$4,310
	213/215	$3,391	$2,406	$3,281	$3,391	$4,310
	254/256	$3,391	$2,406	$3,281	$3,391	$4,310
	284/286	$4,041	$2,406	$3,281	$4,041	$4,310
	324/326	$4,041	$2,406	$3,281	$4,041	$4,310
	364/365	$4,041	$2,406	$3,281	$4,041	$4,310
	404/405	$4,041	$2,406	$3,281	$4,041	$4,310
	444/445	$4,041	$2,406	$3,281	$4,041	$4,310
	447	$4,041	$2,406	$3,281	$4,041	$4,310
	449/500	$4,041	$2,406	$3,281	$4,041	$4,310
	5000/5800	$4,041	$2,406	$3,281	$4,041	$4,310

Option		Avtron AV32 (1)	Avtron HS35M (1)	Dynapar HS35 (1)	Dynapar HS20 (1)	BEI HS35 (1)
Frame	143/145	$2,050	$2,734	$2,734	$2,188	$2,734
	182/184	$2,050	$2,734	$2,734	$2,188	$2,734
	213/215	$2,050	$2,734	$2,734	$2,188	$2,734
	254/256	$2,050	$2,734	$2,734	$2,188	$2,734
	284/286	$2,050	$2,734	$2,734	$2,188	$2,734
	324/326	$2,050	$2,734	$2,734	$2,188	$2,734
	364/365	$2,050	$2,734	$2,734	$2,188	$2,734
	404/405	$2,050	$2,734	$2,734	$2,188	$2,734
	444/445	$2,050	$2,734	$2,734	$2,188	$2,734
	447	$2,050	$2,734	$2,734	$2,188	$2,734
	449/500	$2,050	$2,734	$2,734	$2,188	$2,734
	5000/5800	$2,050	$2,734	$2,734	$2,188	$2,734

(1) The encoder is shaft-mounted.
(2) The encoder is face-mounted.
(3) 280 frame and above are for TEAO and TEBC applications only.
(4) This encoder is suitable for Division 2 environments (Groups A, B, C, D, F, and G).

Special Notes:

- Adders above are not available on explosion proof product.
- For availability on explosion proof product, contact Toshiba.

Export Crating

Toshiba provides packaging options for different shipping requirements. Options include standard commercial packaging (for common, below-deck transport on ships) and containerized shipping. Both options are available at a net price of 8% of the motor's total sell price or a minimum of $350, whichever is greater.

Fan Covers

Cast Iron fan covers are available for totally enclosed fan cooled enclosures.

Option		Cast Iron Fan Cover (1)
Frame	143/145	$90
	182/184	$110
	213/215	$140
	254/256	$180
	284/286	$260
	324/326	$300
	364/365	$485
	404/405	$640
	444/445	$1000
	447	$1,500
	449	$2,200
	500	Contact Toshiba
	5000/5800	Contact Toshiba

(1) This feature is standard on EQPIII 840, EQPIII 841, EQP Global® 840, EQP Global® 841, and explosion proof motors.

Flange-Mounting

Flanges can be ordered through production and are also available as kits. Contact Field Service for Spare Part Kits.

Open Drip Proof Motors

Option		C-Face Footed	D-Flange Footed (1)
Frame	143/145	—	—
	182/184	—	—
	213/215	—	—
	254/256	—	—
	284/286	—	—
	324/326	—	—
	364/365	—	$1,695
	404/405	$1,094	$2,078
	444/445	$1,586	$2,297
	447	$1,695	$2,734
	449/500	—	$2,734 (2)
	5000/5800	—	—

(1) D-flanges are available on 2-pole (3600 RPM) or 4-pole (1800 RPM) short shaft motors only.
(2) 500 frame D-flanges are available with diameters larger than those of short shaft motors. Contact Toshiba for specific availability.

Special Note:

- 210 through 440 frames meet NEMA BA dimension for C-flanges.

Totally Enclosed Fan Cooled Motors

Option		C-Face Footed	C-Face Footless (1)	D-Flange Footed	D-Flange Footless (1)
Frame	143/145	$109 (2)	$175	—	—
	182/184	$131 (2)	$219	—	—
	213/215	$175 (2)	$219	$547	$656
	254/256	$263 (2)	$350	$875	$984
	284/286	$438	$514	$930	$1,148
	324/326	$492	$678	$1,422	$1,641
	364/365	$820	$1,061	$1,695	$2,188
	404/405	$1,148	$1,586	$2,078	$2,570
	444/445	$1,477	$2,242	$2,297	$3,063
	447	$1,477	$2,242	$2,297	$3,063
	449	$1,641 (3)	$2,516 (3)	$2,734 (3)	$3,391 (3)
	500	—	—	—	—
	5000/5800	$2,200	—	$2,953	—

(1) These adders do not include drip covers or vertical lifting provisions.
(2) Motors do not meet NEMA BA dimensions (NEMA BA dimensions are available on 140 and 180 frame as production motors when specified).
(3) This option is not available on 500 frame motors; only on N449 frames.

Totally Enclosed Explosion Proof Motors

Option		C-Face Footed
Frame	143/145	$241 (1)
	182/184	$273 (1)
	213/215	$328 (1)
	254/256	$438 (1)
	284/286	$766
	324/326	$875
	364/365	$984
	404/405	—
	444/445	—
	447	—
	449/500	—
	5000/5800	—

(1) Motors do not meet NEMA BA dimensions.

Frequency

See Voltage Section.

Grease Fittings

Standard hydraulic, Alemite/Zerk type fittings are provided with motors with regreasable bearings. For special grease fittings and drains, contact Toshiba for pricing and availability. For grease fittings, see “Regreasable Bearings” modification.

Grounding Provisions

All motor frames 140 through 5810 have CSA clamp-type grounding lugs in the conduit box. All EQP Global® 840 and EQP Global® 841 motors are provided with a UL-approved clamp-type grounding lug in the conduit box.

External Grounding Provisions on Motor Frame (Base)

All EQPIII 841 and EQP Global® 841 motors have an additional grounding provision on the motor base as standard. The grounding provisions on the motor base are ¼ to 20 UNC (unified inch coarse thread) for motors up to 50 HP, ⅜ to 16 UNC for motors above 50 HP and up to 200 HP, and ½ to 13 UNC for motors above 200 HP.

Option		Base Grounding
Frame	143/145	$219
	182/184	$219
	213/215	$219
	254/256	$219
	284/286	$219
	324/326	$219
	364/365	$219
	404/405	$219
	444/445	$219
	447	$219
	449/500	$219
	5010/5810	$219
	5011/5811	(1)

(1) Grounding provision is provided as standard.

Special Note:

- External grounding provisions are available for explosion proof product but must be used as supplementary ground connection in conjunction to the main equipment ground provision provided In the main terminal box.

External Grounding Pad to Motor Frame

Apply the adder below for a copper ground pad with two holes mounted on the motor frame. When placing the order, the hole and tap size must be provided.

Option		Frame Grounding
Frame	143/145	—
	182/184	—
	213/215	—
	254/256	—
	284/286	—
	324/326	$1,641
	364/365	$1,641
	404/405	$1,641
	444/445	$1,641
	447	$1,641
	449/500	$1,641
	5000/5800	$1,641

Grounding Provisions to Motor Shaft

See “Shaft Grounding” modifications section.

Hardware

Standard hardware is non-corrosive zinc dichromate. Stainless hardware fasteners (holding brackets, conduit box, fan cover, and inner caps) are available. Toshiba standard stainless hardware is 304 unless specified otherwise.

Option		304 SS Hardware	316 SS Hardware
Frame	143/145	$328	$438
	182/184	$328	$438
	213/215	$383	$492
	254/256	$438	$547
	284/286	$438	$547
	324/326	$711	$875
	364/365	$766	$875
	404/405	$875	$1,094
	444/445	$930	$1,148
	447	$984	$1,203
	449/500	$984	$1,313
	5000/5800	$1,094	$1,531

Special Note:

- Adders above are not available on explosion proof product.

Insulation Modifications

Insulation systems are divided into classes according to the thermal endurance by temperature rating. Standard motor insulation is non-hygroscopic Class F (utilizing Class H components), and is dipped and baked in a Class H varnish. Unusual or severe applications may require special insulation systems or winding protection.

Upgrade to Class H Insulation System

Option		Class H
Frame	143/145	$284
	182/184	$284
	213/215	$284
	254/256	$372
	284/286	$656
	324/326	$809
	364/365	$1,039
	404/405	$1,498
	444/445	$2,122
	447	$2,625
	449/500	$3,281
	5000/5800	$4,375

Special Notes:

- Adders above not available on explosion proof product.
- Class H insulation is standard on dry kiln product.
- No UL Component Recognition (UR) approval listing for Class H.
- Class H insulation is not UL 1004 compliant.

Tropicalized Coating on Motor Winding & Internal Surface

This adder provides additional insulation coating as well as corrosion protection for all internal machined surfaces.

Option		Internal Coating
Frame	143/145	$164
	182/184	$164
	213/215	$219
	254/256	$328
	284/286	$547
	324/326	$766
	364/365	$875
	404/405	$1,203
	444/445	$1,641
	447	$2,406
	449/500	$2,406
	5000/5800	$2,734

Special Note:

- This adder comes standard on all 840 and all 841 product.

Fungus-Proof Coating on Motor Windings

Unwanted fungi may break down a motor's insulation system over time. The addition of the fungus-proof adder will protect motor windings from this type of problem.

Option		Fungus-Proof Coating
Frame	143/145	$109
	182/184	$109
	213/215	$164
	254/256	$219
	284/286	$328
	324/326	$438
	364/365	$547
	404/405	$711
	444/445	$930
	447	$1,203
	449/500	$1,203
	5000/5800	$1,531

Encapsulate Windings

The encapsulate windings adder consists of an additional epoxy resin coating on the motor winding. Protects motor internally in situations where internal components will be directly exposed to corrosive and/or humid environments.

Option		Encapsulate (1)
Frame	143/145	$656
	182/184	$656
	213/215	$656
	254/256	$1,050
	284/286	$1,214
	324/326	$1,313
	364/365	$1,553
	404/405	$2,166
	444/445	$2,964
	447	$3,281
	449/500	Contact Toshiba
	5000/5800	

(1) List prices apply to open drip-proof motors only.

Special Note:

- Adders above are not available on explosion proof or totally enclosed fan cooled product.

Epoxy Coating on Motor Windings

This adder provides additional protection against corrosive and/or humid environments.

Option		Epoxy Coating
Frame	143/145	$164
	182/184	$164
	213/215	$219
	254/256	$328
	284/286	$547
	324/326	$766
	364/365	$875
	404/405	$1,203
	444/445	$1,641
	447	$2,406
	449/500	$2,406
	5000/5800	$2,734

Labels

See “Nameplates” section for information.

Lead Length/Lead Terminals

Crimp-type lead lugs/ring terminals come standard on motors as follows:

1. 210 frame and larger on all EQP 840 products
2. All EQP 841 products
3. All other 280 frame and larger motors

Crimp Terminals

Option		Crimp
Frame	143/145	$109
	182/184	$109
	213/215	$153
	254/256	$153
	284/286	—
	324/326	—
	364/365	—
	404/405	—
	444/445	—
	447	—
	449/500	—
	5000/5800	—

Burndy Lugs/Two-Hole Terminals

Option		Burndy
Frame	143/145	—
	182/184	—
	213/215	—
	254/256	—
	284/286	$744
	324/326	$744
	364/365	$744
	404/405	$744
	444/445	$744
	447	$744
	449/500	$744
	5000/5800	$744

Longer Lead Length than Standard

Typical lead lengths are 5” on 143-184T, 7” on 213-256T, 10” on 284-365T, and 12” on 404-5810U frames. Prices are based on a per foot, per lead basis. Multiply the number of motor leads by the number of desired feet and then by the applicable charge below.

Option		Per Foot, Per Lead (1)
Frame	143/145	$11
	182/184	$11
	213/215	$11
	254/256	$11
	284/286	$18
	324/326	$18
	364/365	$22
	404/405	$22
	444/445	$33
	447	$33
	449/500	$55
	5000/5800	$55

(1) For standard number of leads, refer to the Toshiba Installation and Maintenance Manual.

Lubrication

All bearings in motors with Class F insulation will be furnished with a lubricant that is capable of operating in ambient temperatures between -25˚ and 65˚C. Please note that it is not recommended to mix greases of different bases. The mixing of different types of thickeners may destroy the composition and physical properties of the grease.

High Temperature Grease

This adder is for applications in which the ambient temperature is greater than 65˚C.

Option		High Temp. Grease
Frame	143/145	$109
	182/184	$109
	213/215	$109
	254/256	$109
	284/286	$109
	324/326	$273
	364/365	$273
	404/405	$273
	444/445	$273
	447	$273
	449/500	$273
	5000/5800	$273

Low Temperature Grease

This adder is for applications in which the ambient temperature ranges from -25˚ to -40˚C.

Option		Low Temp. Grease
Frame	143/145	$109 (1)
	182/184	$109 (1)
	213/215	$109 (1)
	254/256	$109 (1)
	284/286	$109
	324/326	$273
	364/365	$273
	404/405	$273
	444/445	$273
	447	$273
	449/500	$273
	5000/5800	$273

(1) All sealed bearing design motors come standard with lithium based grease suitable for -40°C ambient.

Oil-Mist

Oil-mist lubrication is available on EQPIII 840 and EQPIII 841 motors only. Toshiba's EQPIII 840 and EQPIII 841 motors can be modified to accept an externally-generated oil-mist/dry sump lubrication arrangement. The type of preparation must be noted within the purchase order:

1. Oil-Mist Provisions (for future oil mist): The bearing cavity is arranged for oil-mist, but the bearings will be packed with grease for normal operation. Should the oil-mist system be connected, Toshiba recommends that the grease be cleaned from the bearings and bearing cavities.
2. Oil-Mist Ready: The bearings will receive a light coat of oil for testing and shipment; however, the oil-mist system must be connected upon receipt of product.

Option		Oil-Mist Provisions	Oil-Mist Ready
Frame	143/145	$766	$766
	182/184	$766	$766
	213/215	$766	$766
	254/256	$875	$875
	284/286	$875	$875
	324/326	$1,094	$1,094
	364/365	$1,313	$1,313
	404/405	$1,750	$1,750
	444/445	$2,625	$2,625
	447	$3,172	$3,172
	449/500	$3,172	$3,172
	5000/5800	$3,828	$3,828

Special Notes:

- Adders above are not available on explosion proof product.
- This adder is not available on general purpose vertical shaft-down or shaft-up applications. Contact Toshiba for vertical oil mist applications.
- Oil-mist options are available on our vertical solid shaft P-base products.
- For storage, refer to Toshiba's oil-mist manual.

Special-Based Grease Requirements

This adder is for applications in which the customer specifies a grease other than the Toshiba standard. For other special grease, contact Toshiba.

Nameplates

Standard nameplates are 304-grade stainless steel with engraved lettering. Additional nameplates for remote-mounting and special markings are available.

Duplicate or Special Nameplates

For requests other than what is listed below, contact Toshiba.

Option		Duplicate Nameplate	Special ID Tag
Frame	56/143/145	$150	$150
	182/184	$150	$150
	213/215	$150	$150
	254/256	$150	$150
	284/286	$150	$150
	324/326	$150	$150
	364/365	$150	$150
	404/405	$150	$150
	444/445	$150	$150
	447	$150	$150
	449/500	$150	$150
	5000/5800	$150	$150

Paint

The standard paint finish is a self-priming, air-dried, acrylic alkyd resin finish. Beyond the standard colors offered by Toshiba, special colors and types of paints are available upon request. For special paint requirements, full specifications and color chip/manufacture color code will be required. Special paints requiring special application/curing equipment may not be available. Contact Toshiba for full details.

Option		Color Change Only	Special
Frame	143/145	Contact Toshiba	Contact Toshiba
	182/184		
	213/215		
	254/256		
	284/286		
	324/326		
	364/365		
	404/405		
	444/445		
	447		
	449/500	$984	
	5000/5800	$1,094	

Special Note:

- TIC standard paint color is RAL 6012 green.

Screens

Corrosion-resistant screens covering air inlets and outlets of open drip-proof motors are available. Motors equipped with screens will meet the NEMA guarded definition.

Screens to an Open Drip-Proof Motor

Option		Corrosion-Resistant	Stainless Steel
Frame	143/145	$219	$273
	182/184	$273	$328
	213/215	$306	$361
	254/256	$361	$416
	284/286	$383	$438
	324/326	$438	$547
	364/365	$547	$766
	404/405	$766	$1,094
	444/445	$820	$1,203
	447	$875	$1,258
	449/500	$875	$1,258
	5000/5800	$1,094	$1,641

Special Note:

- Screens come standard on oil well pump motors.

Seals

Shaft seals are installed on the shaft at the bracket face to prevent the ingress of dirt and liquid.

Option		V-Ring Drive End (1)	V-Ring Both Ends (1)	Labyrinth Drive End (2)
Frame	143/145	$142	$284	$492
	182/184	$186	$372	$492
	213/215	$186	$372	$547
	254/256	$186	$372	$656
	284/286	$197	$394	$766
	324/326	$252	$503	$766
	364/365	$252	$503	$984
	404/405	$317	$634	$984
	444/445	$328	$656	$1,203
	447	$328	$656	$1,422
	449/500	$350	$700	$1,531
	5000/5800	$350	$700	$1,641

Option		Labyrinth Both Ends (2)	Taconite Drive End (3)	Taconite Both Ends (3)
Frame	143/145	$984	$492	$984
	182/184	$984	$492	$984
	213/215	$1,094	$547	$1,094
	254/256	$1,313	$656	$1,313
	284/286	$1,531	$766	$1,531
	324/326	$1,531	$766	$1,531
	364/365	$1,969	$984	$1,969
	404/405	$1,969	$984	$1,969
	444/445	$2,406	$1,203	$2,406
	447	$2,844	$1,422	$2,844
	449/500	$3,063	$1,531	$3,063
	5000/5800	$3,281	$1,641	$3,281

(1) V-Ring shaft seals come standard on the drive end of totally enclosed motors.
(2) Non-contact labyrinth seals come standard on both ends of all EQP 841 series products and 400 frame and larger for EQP 840 series products.
(3) The taconite construction consists of two special bronze labyrinth seals (one on each end).

Special Notes:

- Adders above are not available on explosion proof product.
- Explosion proof products are provided with brass shaft slinger on both ends as standard. Contact Toshiba for pricing and availability for labyrinth seals.

Service Factor

Standard stock motors are designed for 1.15 service factor unless otherwise noted. Higher service factors are available if requested. Inquiries for service factors above 1.15 should be submitted to Toshiba for review. In certain cases, a higher service factor will require an increase in frame size or a special design.

Shafts

For shafts other than the Toshiba standard, see adders below.

NEMA Double-Shaft

Option		NEMA Double-Shaft
Frame	143/145	$153
	182/184	$153
	213/215	$208
	254/256	$273
	284/286	$405
	324/326	$591
	364/365	$667
	404/405	$733
	444/445	$973
	447	$973
	449/500	$973 (1)
	5000/5800	—

(1) The NEMA double-shaft adder is defined up to N449 frame only. For 500 frame and larger, see "Special Shaft" adder section.

NEMA TS-Shaft to NEMA T-Shaft

Option		NEMA TS to NEMA T (2-Pole Motors)
Frame	284/286	$405
	324/326	$591
	364/365	$667
	404/405	$755

Special Note:

- T-shaft, 2-pole motors are not recommended for belted applications.

NEMA TS Short Shaft

Toshiba does not charge for this modification on a production basis for direct-coupled applications. Requests for this option will be subject to standard factory lead times.

Special Shaft (Non-NEMA)

Any special shafts beyond what is listed above require adders from both Table A and Table B below.

- Table A – Base Charge for Shaft
- Table B – Shaft Feature Adder

Table A – Base Adder for Special Shaft Requirement

Option		Quantity 1	Quantity 2 to 4	Quantity 5+
Frame	143/145	$656	$295	$109
	182/184	$656	$295	$109
	213/215	$766	$295	$109
	254/256	$831	$328	$131
	284/286	$930	$372	$186
	324/326	$1,006	$427	$230
	364/365	$1,192	$481	$273
	404/405	$1,389	$492	$339
	444/445	$1,641	$678	$416
	447	$1,750	$711	$416
	449/500	$1,750	$711	$416
	5000/5800	$2,406	$1,148	$656

Table B – Shaft Features/Material

Option		304 Stainless Steel (1)	316 Stainless Steel (1)	416 Stainless Steel (2)	4142 High Strength Steel	For each additional 5" length (3)
Frame	143/145	$175	$328	$131	$66	$66
	182/184	$175	$328	$131	$66	$66
	213/215	$372	$711	$273	$98	$98
	254/256	$514	$1,006	$383	$98	$98
	284/286	$766	$1,498	$569	$120	$120
	324/326	$1,389	$2,734	$984	$153	$153
	364/365	$1,794	$3,588	$1,313	$164	$164
	404/405	$2,581	$5,163	$1,936	$186	$186
	444/445	$2,767	$5,534	$2,078	$219	$219
	447	$2,898	$5,797	$2,078	$230	$230
	449/500	$3,063	$6,125	$2,188	$230	$230
	5000/5800	$3,281	$6,563	$2,461	$273	$273

Option		Drill & Tap in Shaft End	Steps – For Each Step or Reduced Dia.	Special Keyway	Threads	Tapers
Frame	143/145	$66	$66	$66	$66	$88
	182/184	$66	$66	$66	$66	$88
	213/215	$98	$98	$98	$98	$109
	254/256	$98	$98	$98	$98	$142
	284/286	$120	$120	$120	$120	$175
	324/326	$153	$153	$153	$153	$208
	364/365	$164	$164	$164	$164	$230
	404/405	$186	$186	$186	$186	$263
	444/445	$219	$219	$219	$219	$295
	447	$230	$230	$230	$230	$306
	449/500	$230	$230	$230	$230	$306
	5000/5800	$273	$273	$273	$273	$438

(1) Not available on 2-pole (3600/3000 RPM) motors.
(2) The use of 416 stainless steel is required for 2-pole motors.
(3) For lengths greater than four times the shaft diameter, contact Toshiba for availability and pricing.

Shaft Seals

See "Seals" modification section.

Shaft Grounding Provisions

Shaft grounding provisions help to eliminate shaft currents that can be introduced into the motor through upstream controllers (i.e. adjustable speed drives). These currents can potentially lead to premature failure of the bearings, commonly referred to as "fluting."

Option		Shaft Grounding Brush	Aegis Grounding Ring (1)
Frame	143/145	$1,367	$182
	182/184	$1,367	$208
	213/215	$1,367	$236
	254/256	$1,367	$290
	284/286	$1,367	$344
	324/326	$1,477	$398
	364/365	$1,641	$404
	404/405	$1,805	$597
	444/445	$2,187	$861
	447	$2,187	$861
	449/500	$2,187	$861
	5000/5800	$2,734	—

(1) For C-face motors with drive end installation - contact Toshiba.

Special Notes:

- Adders above do not include insulated bearings.
- Adders above are not available on explosion proof product.
- Insulating the bearings is recommended when the shaft voltage exceeds 300 mV.
- It is up to the user to determine when insulated bearings are required, especially with the use of an inverter-fed control. NEMA MG1 Part 31 suggests insulating the bearing(s) on all motors in 500 series frames and larger that are inverter-fed.
- Shaft grounding rings may be used to divert the current around the bearing with the use of inverter-fed control.
- Toshiba recommends the non-drive end bearing be insulated on all frame sizes 440 and larger, when used with adjustable speed drives.
- Insulated bearings are not available on angular contact bearing construction.
- Where insulated bearings are used on direct coupled applications the use of insulated coupling and/or shaft grounding brush is required to reduce the risk of driven equipment bearing damage.
  - » Ground rings are not suitable for Division 2 environments
- If bearing thermal devices are required with the insulated bearing, a special version of the thermal device will be required.
- Contact Toshiba for availability and price.
- Adders above, are suitable for drive end and non-drive end installation.

Software: Engineering Data

Upon request only at the time of order, Toshiba will provide the following standard data package is available for production motors at no charge: certified print, speed-torque and speed-current curve (at 100% rated voltage), nameplate data, performance data, connection diagram, instruction and maintenance manual, and spare bearings parts list.

Above data will be sent out in electronic format. If hard copy information is required, see the adder below. For software other than what is listed above or that is specified after time of order, see table below.

Prices below are NET adders per option.

Software	Price
Toshiba Standard Software Package (1)	$75
Speed Torque & Speed-Current Curve	$75
Thermal Damage (Safe Stall Time) Curve	$75
Performance Curve	$75
Torsional Data (3)	$100
Non-Standard Outline Drawing	Contact Toshiba
Certificate of Compliance	$75
First Page of Customer Supplied Data Sheet (2)	$55
Additional Pages of Customer Supplied Data Sheet (2)	$40
Additional Copies of Data	$30
Express Shipping	$50
Other Special Requests	Contact Toshiba

(1) This adder applies only if it is specified after the order has been entered and acknowledged.
(2) This adder pertains to typical Toshiba performance data only.
(3) This adder will include shaft drawing, rotor assembly inertia, shaft torsional stiffness values.

Space Heaters

Space heaters are strip-type heaters mounted inside the frame near the coils to prevent moisture condensation in the motor during times the motor is not energized. Heater leads are brought out to the motor's main conduit box and marked H1 and H2. Standard heater voltage is 120 V single-phase unless otherwise specified.

Option		Standard	Division 2	Explosion Proof
Frame	143/145	$328	$492	$634
	182/184	$328	$492	$634
	213/215	$328	$492	$634
	254/256	$328	$492	$634
	284/286	$481	$722	$952
	324/326	$481	$722	$952
	364/365	$580	$870	$1,148
	404/405	$700	$1,050	$1,400
	444/445	$831	$1,242	$1,652
	447	$941	$1,412	$1,859
	449/500	$941	$1,412	$1,859
	5000/5800	$1,148	$1,722	—

Starting/Connection

Toshiba standard stock motors have various starting connections/configurations available. For special or non-standard starting requirements, use the modifications below.

Option		Part Winding	Wye-Delta
Frame	143/145	—	—
	182/184	—	—
	213/215	$153	$153
	254/256	$208	$208
	284/286	$241	$241
	324/326	$295	$295
	364/365	$427	$427
	404/405	$667	$667
	444/445	$1,083	$1,083
	447	$1,203	$1,203
	449/500	$1,203	$1,203
	5000/5800	(1)	(1)

(1) Contact Toshiba on 5000 frames and larger for price and availability.

Surge Protection

Surge protection for motors is available on 440 frames and larger.

Option		Surge Capacitors (1)	Lightning Arrestor (1)	Surge Protection Package (1)	Current Transformer (2) (One Per Phase)
Frame	449/500	$4,750	$16,700	$20,925	$5,900
	5000/5800	$4,750	$16,700	$20,925	$5,900

(1) Not available for use with ASD control.
(2) Current transformers supplied with 10:1 current ratio as standard. Specify if other current ratio is desired.

Special Notes:

- This adder comes with an oversized main terminal box.
- These adders are not suitable for Division 2 environments.

Terminal Blocks/Strips

Insulated stud-type terminal blocks/strips can be provided for single-voltage, single-speed applications in the standard conduit box.

Option		Terminal Block (1)	Terminal Strip (2)
Frame	143/145	$339	$219
	182/184	$339	$219
	213/215	$339	$219
	254/256	$339	$219
	284/286	$405	$219
	324/326	$733	$219
	364/365	$733	$219
	404/405	$733	$219
	444/445	$1,589	$219
	447	$1,589	$219
	449/500	$1,805	$219
	5000/5800	$2,527	$219

(1) This adder refers to power leads only.
(2) This adder refers to accessory leads only.

Specia' Note:

- Adders above are not available on explosion proof product.

Testing

Toshiba motors are tested in compliance with IEEE Std. 112 to meet NEMA MG1 requirements. Test reports and optional testing are available for each individual motor. Duplicates/copies of standard routine test reports are available.

Please contact Toshiba for scheduling/coordination for witness testing requirements.
Prices below are NET adders per option.

Option		Routine, Unwitnessed (Report Only)	Routine, Witnessed	Complete, Unwit-nessed (2)	Complete, Witnessed (2)	Noise, Un-witnessed (1)
Frame	143/145	$60	$600	$3,800	$4,500	$1,200
	182/184	$60	$600	$3,800	$4,500	$1,200
	213/215	$60	$600	$3,800	$4,500	$1,200
	254/256	$60	$600	$3,800	$4,500	$1,200
	284/286	$60	$1,000	$4,200	$5,250	$1,600
	324/326	$60	$1,000	$4,200	$6,000	$1,600
	364/365	$60	$1,500	$4,500	$6,750	$1,600
	404/405	$60	$1,500	$4,500	$7,500	$1,600
	444/445	$60	$1,500	$5,700	$8,250	$2,000
	447	$60	$1,500	$5,700	$8,250	$2,000
	449/500	$60	$2,000	$6,400	$10,500	$2,400
	5000/5800	$60	$2,000	$6,400	$10,500	$2,400

Option		Noise, Witnessed (1)	Vibration	Insulation Resistance	Polarization Index
Frame	143/145	$2,000	$1,200	$700	$1,000
	182/184	$2,000	$1,200	$700	$1,000
	213/215	$2,000	$1,200	$700	$1,000
	254/256	$2,000	$1,200	$800	$1,100
	284/286	$2,400	$1,600	$800	$1,100
	324/326	$2,400	$1,600	$900	$1,200
	364/365	$2,400	$1,600	$900	$1,200
	404/405	$2,400	$1,600	$1,000	$1,300
	444/445	$3,000	$2,000	$1,000	$1,300
	447	$3,000	$2,000	$1,100	$1,400
	449/500	$3,000	$2,000	$1,100	$1,400
	5000/5800	$3,000	$2,000	$1,100	$1,400

(1) Noise test consists of overall sound pressure values/readings only. For octave band measurements, contact Toshiba.
(2) Complete performance test per IEEE 112 method B.

Special Notes:

- For testing of more than one voltage or speed, multiply the adder above by the following.
  - » One Additional Voltage or Speed — 1.50
  - » Two Additional Voltages or Speeds — 2.00
  - » Three Additional Voltages or Speeds — 2.50
- Contact Toshiba for additional voltages not listed below.

Thermal Protection

Toshiba provides a wide variety of protective devices which are available as follows.

Thermostats (Klixons)

Toshiba's standard offering includes a normally-closed (NC), bi-metallic, temperature actuated element mounted on the stator winding. Leads are marked P1 and P2. Termination of the leads is in the main conduit box. Special thermostats are available upon request. Contact Toshiba for pricing and availability.

Option		Klixons NC	Klixons NO	Hermetically Sealed (1)
Frame	56/143/145	$246	$328	$328
	182/184	$246	$328	$328
	213/215	$246	$328	$328
	254/256	$246	$328	$328
	284/286	$246	$328	$328
	324/326	$345	$459	$459
	364/365	$345	$459	$459
	404/405	$492	$656	$656
	444/445	$492	$656	$656
	447	$608	$809	$809
	449/500	$608	$809	$809
	5000/5800	$657	$875	$875

(1) If used in Division 2 environments, hermetically sealed thermostats are required.

Winding PTC Thermistors

Non-linear resistance temperature detectors are mounted on the motor winding. This thermal protection consists of three thermistors only or three thermistors with a solid state control relay. The provided control relay is intended for mounting in a remote location.

Option		Mark A (PTC) Thermistor	Mark A (PTC) Thermistor & Module (1)
Frame	143/145	$328	$1,367
	182/184	$328	$1,367
	213/215	$328	$1,367
	254/256	$328	$1,367
	284/286	$328	$1,367
	324/326	$328	$1,367
	364/365	$328	$1,367
	404/405	$328	$1,367
	444/445	$328	$1,367
	447	$328	$1,367
	449/500	$328	$1,367
	5000/5800	$328	$1,367

(1) This adder includes auxiliary conduit.

Special Note:

- Thermistors can only be terminated in the main terminal box for explosion proof product.

Thermocouples

Winding (Stator) Thermocouples – A set of six (two per phase) winding thermocouples are provided and leads are terminated in a separate auxiliary conduit box. Pricing below does not include readout device(s).

Option		Stator Thermocouples "Type J"	Stator Thermocouples "Type T"
Frame	143/145	—	—
	182/184	—	—
	213/215	—	—
	254/256	—	—
	284/286	$2,625	$2,625
	324/326	$2,625	$2,625
	364/365	$2,625	$2,625
	404/405	$2,625	$2,625
	444/445	$2,625	$2,625
	447	$2,625	$2,625
	449/500	$2,625	$2,625
	5000/5800	$2,625	$2,625
Option		**Stator Thermocouples "Type E"**	**Stator Thermocouples "Type K"**
Frame	143/145	—	—
	182/184	—	—
	213/215	—	—
	284/286	$2,625	$2,625
	324/326	$2,625	$2,625
	364/365	$2,625	$2,625
	404/405	$2,625	$2,625
	444/445	$2,625	$2,625
	447	$2,625	$2,625
	449/500	$2,625	$2,625
	5000/5800	$2,625	$2,625

Bearing Thermocouple – Pricing includes one per bearing (total of two thermocouples) with leads terminated in separate terminal housings. Pricing below does not include readout device(s).

Option		Bearing Thermocouples "Type J"	Bearing Thermocouples "Type T"
Frame	143/145	—	—
	182/184	—	—
	213/215	—	—
	254/256	—	—
	284/286	$3,938	$3,938
	324/326	$3,938	$3,938
	364/365	$3,938	$3,938
	404/405	$3,938	$3,938
	444/445	$3,938	$3,938
	447	$3,938	$3,938
	449/500	$3,938	$3,938
	5000/5800	$3,938	$3,938
Option		**Bearing Thermocouples "Type E"**	**Bearing Thermocouples "Type K"**
Frame	143/145	—	—
	182/184	—	—
	213/215	—	—
	254/256	—	—
	284/286	$3,938	$3,938
	324/326	$3,938	$3,938
	364/365	$3,938	$3,938
	404/405	$3,938	$3,938
	444/445	$3,938	$3,938
	447	$3,938	$3,938
	449/500	$3,938	$3,938
	5000/5800	$3,938	$3,938

Resistance Temperature Detectors (RTDs)

Winding (Stator) RTDs – A set of six (two per phase, three leads) winding RTDs are provided with leads terminated in an auxiliary conduit box. Pricing below does not include readout device(s).

Option		Stator RTDs (Copper; 10 ohm)	Stator RTDs (Platinum; 100 ohm)	Stator RTDs (Nickel; 120 ohm)
Frame	143/145	—	—	—
	182/184	—	—	—
	213/215	—	—	—
	254/256	—	—	
	284/286	$4,266	$4,266	$4,266
	324/326	$4,266	$4,266	$4,266
	364/365	$4,266	$4,266	$4,266
	404/405	$4,266	$4,266	$4,266
	444/445	$4,266	$4,266	$4,266
	447	$4,266	$4,266	$4,266
	449/500	$4,266	$4,266	$4,266
	5000/5800	$4,266	$4,266	$4,266

Special Notes:

- Contact Toshiba for pricing on other RTD types.
- This adder is not available on explosion proof motors.

Bearing RTDs – Pricing includes one RTD per bearing (a total of two RTDs) and a three-lead single element design with leads terminated in separate terminal housings. Pricing below does not include readout device(s).

Option		Bearing RTDs (Copper; 10 ohm)	Bearing RTDs (Platinum; 100 ohm)	Bearing RTDs (Nickel; 120 ohm)
Frame	143/145	—	—	—
	182/184	—	—	—
	213/215	—	—	—
	254/256	—	—	
	284/286	$4,813	$4,813	$4,813
	324/326	$4,813	$4,813	$4,813
	364/365	$4,813	$4,813	$4,813
	404/405	$4,813	$4,813	$4,813
	444/445	$4,813	$4,813	$4,813
	447	$4,813	$4,813	$4,813
	449/500	$4,813	$4,813	$4,813
	5000/5800	$4,813	$4,813	$4,813

Special Notes:

- Contact Toshiba for pricing on other RTD types, including dual element.
- This adder is not available on explosion proof motors.

Torque

Toshiba offers standard stock NEMA Design B, C, and D motors in our catalog. For other special torque requirements (i.e. starting/locked rotor, pull-up and/or breakdown torque), contact Toshiba. When available, please provide speed torque curve on the driven equipment and driven equipment inertia.

Vertical Jacking Provisions

Vertical jacking is used to assist in the proper alignment of the motor shaft with the driven equipment for shimming purposes. Provisions for four jacking bolts (one per foot) are provided. Jacking bolts are to be supplied by the customer.

Option		Vertical Jacking
Frame	143/145	$545
	182/184	$545
	213/215	$650
	254/256	$650
	284/286	$760
	324/326	$875
	364/365	$875
	404/405	$984
	444/445	$984
	447	$984
	449/500	$1,203
	5000/5800	$1,203

Special Note:

- This adder comes standard on totally enclosed fan cooled frames 5011/5811.

Vertical Lifting Provisions

This modification provides vertical lifting provisions for standard footless motors that are mounted vertical shaft down only.

Option		Vertical Lifting (2)
Frame	143/145	$328
	182/184	$394
	213/215	$394
	254/256	$547
	284/286	$547
	324/326	$755
	364/365	$755
	404/405	$952
	444/445	$1050
	447	$1050
	449/500	$1203
	5000/5800	—

(1) Vertical lifting available on 500 frame motors.
(2) Contact Toshiba for footed motors.

Special Notes:

- Above adders not available on open drip-proof or explosion proof motors, and are not available on any foot-mounted motors.
- It is recommended that if a motor is mounted vertically, a drip cover also be provided (see "Drip Cover" section).

Vibration Detectors

These detectors are for single direction monitoring (horizontal, vertical, or axial). For total coverage of all three directions, three detectors must be provided. Monitoring direction must be specified at time of order.

Vibration Monitoring Detectors

Robertshaw - consists of a self-contained detector and switch. A Robertshaw is an acceleration-sensitive instrument that measures peak vibratory shock at the point of measurement.

Accelerometer - used to sense bearing housing vibration on motors with anti-friction bearings.

Option		Provisions Only for Robertshaw (1, 3)	Robertshaw Sensor (2, 3)	Provisions for Accelerometer or Velocity Sensor (4)	Metrix Accelerometer Sensor Both Ends (5)
Frame	143/145	—	—	$547	—
	182/184	—	—	$547	—
	213/215	—	—	$547	—
	254/256	$1,039	$4,266	$547	—
	284/286	$1,039	$4,266	$547	—
	324/326	$1,039	$4,266	$547	—
	364/365	$1,039	$4,266	$547	—
	404/405	$1,039	$4,266	$547	—
	444/445	$1,039	$4,266	$1,039	$7,380
	447	$1,039	$4,266	$1,039	$7,380
	449/500	$1,039	$4,266	$1,039	$7,380
	5000/ 5800	$1,039	$4,266	$1,039	$7,380

(1) Provisions for mounting are based on a Robertshaw model number 366.
(2) Standard model number offering is 366 (not suitable for Division 2 applications – Contact Toshiba for Division 2).
(3) This adder is not available on explosion proof motors.
(4) Pricing is based on Toshiba providing a single 1"-spot face surface with a ¼"-28 drill and tapped hole, unless specified otherwise.
(5) Pricing is based on Metrix Vibration Sensor Model ST5484E

Special Note:

- For regreasable motors, the provisions available are horizontal and axial.

Voltage

Motors are designed to operate successfully at plus or minus ten percent (10%) rated voltage; or plus or minus five percent (5%) of rated frequency; or combined variation not to exceed ten percent (10%). For 60 Hz voltages other than 230/460, 460, 575, please refer to the list adder for an applicable charge.

This adder applies to 600 V motors or below only. Contact Toshiba for voltages above 600 that are not listed in this catalog.

Option		60 Hz	50 Hz
Frame	143/145	$175	Contact Toshiba
	182/184	$175	
	213/215	$219	
	254/256	$273	
	284/286	$328	
	324/326	$558	
	364/365	$820	
	404/405	$1,291	
	444/445	$1,750	
	447	$2,144	
	449/500	$2,144	
	5000/5800	$2,636	

Windings (Special)

See "Voltage" modifications section.

Medium Voltage General Purpose Series

Open Enclosure Motors

Toshiba's general purpose, medium voltage open enclosure motor series is designed to meet the industry's ever-increasing need for improved energy conservation and product reliability. These motors offer some of the highest efficiency and torque ratings while producing some of the lowest vibration ratings in the industry—leading to a longer life and greater reliability. This motor series is recommended for indoor and outdoor use.

The general purpose, medium voltage open enclosure motor is available in a high efficiency design with a die cast aluminum rotor and anti-friction ball bearings as standard or with an optional copper bar rotor and/or sleeve bearings. These motor offerings are completely customizable due to our in-house design, engineering, and manufacturing capabilities. This allows us to not only meet but exceed specific application requirements.

Standard Features:

- Open Drip-Proof, Weather-Protected Type I, or Weather-Protected Type II
- High Efficiency
- 60 Hz: 2300/4160, 2300/4000, or 4000 V
- Three-Phase
- 1.15 Service Factor*
- Horizontal Foot-Mounted Direct-Coupled Applications
- Class F Form-Wound Insulation
- Class B Temperature Rise at 1.0 Service Factor by Resistance*
- IP22, IP23, or IP24 Protection
- Vacuum-Pressure Impregnated System
- Cast Iron Frame & Brackets with Cast Iron or Stamped Steel Terminal Box(es)
- Anti-Friction Ball or Sleeve Bearings
- Aluminum Die Cast or Copper Bar Rotor
- Polyurea Base Grease or ISO VG Oil
- 304 Stainless Steel Nameplate

*Except Where Noted

Applications:

- Pumps
- Fans
- Compressors
- Conveyors
- Mixers
- Material Handling
- General Applications

Warranty:

- From Date of Manufacture: 18 Months**
- From Date of Installation: 12 Months**

**Whichever Comes First

Open Enclosure

Open Drip-Proof (ODP)

High Efficiency

Toshiba's general purpose, open drip-proof, high efficiency motor series are designed to meet the industry's ever-increasing need for improved energy conservation and product reliability. These product lines offer a high torque and low vibration design leading to longer life and greater reliability. These motor offerings are completely customizable due to our in-house design, engineering, and manufacturing capabilities. This allows us to not only meet but exceed specific application requirements.

Product Scope:

Horsepower: 200 to 900 HP

Speed (60 Hz): 3600, 1800, 1200, or 900 RPM*

Volt (60 Hz): 2300/4160 or 4000 V**

Enclosure: Open Drip-Proof: IP22

Frame Size: 445T through 5810US

Construction: Cast Iron Frame & Brackets with Cast Iron or Stamped Steel Terminal Box(es)

Insulation: Class F with Class B Rise at 1.0 Service Factor by Resistance (except where noted)

Environment: Recommended for Indoor Use

*Contact Toshiba for availability on lower speed designs

**Contact Toshiba for availability on 6000, 60 Hz motors

Additional Options Available; See Catalog Production Modifications Section

HP	Speed (RPM)	Volts	Frame	Bearing	Weight (lbs.)	Model Number	FL Amps	Nominal FL EFF	Notes	Discount Symbol	List Price
200	3600	2300/4160	445TS	ANTI-FRICTION	3500	F2002VLG3JF	49/28	92.4		MXTDPM	$30,580
200	1800	2300/4160	445T	ANTI-FRICTION	3500	F2004VLF3JF	50/29	93.6		MXTDPM	$30,311
200	1200	2300/4160	505US	ANTI-FRICTION	4000	F2006VLF3JF	52/31	92.4		MXTDPM	$36,201
250	3600	2300/4160	505USS	ANTI-FRICTION	4000	F2502VLG3JF	60/34	92.4		MXTDPM	$33,386
250	1800	2300/4160	447TS	ANTI-FRICTION	3500	F2504VLF3JF	60/34	94.1		MXTDPM	$32,427
250	1200	2300/4160	505US	ANTI-FRICTION	4000	F2506VLF3JF	63/37	93		MXTDPM	$37,505
250	900	2300/4160	5810US	ANTI-FRICTION	5500	F2508VLF3JM	62/36	93	12	MXTDPM	$65,955
300	3600	2300/4160	505USS	ANTI-FRICTION	4000	F3002VLG3JF	72/40	94.1		MXTDPM	$34,762
300	1800	2300/4160	505US	ANTI-FRICTION	4000	F3004VLF3JF	70/40	93.6		MXTDPM	$34,884
300	1200	2300/4160	505US	ANTI-FRICTION	4000	F3006VLF3JF	71/41	94.5		MXTDPM	$38,905
300	900	2300/4160	5810US	ANTI-FRICTION	5500	F3008VLF3JM	74/43	93.8	12	MXTDPM	$67,333
350	3600	2300/4160	507USS	ANTI-FRICTION	4000	F3502VLG3JF	81/45	93.6	14	MXTDPM	$36,779
350	1800	2300/4160	505US	ANTI-FRICTION	4000	F3504VLF3JF	80/44	95		MXTDPM	$37,059
350	1200	2300/4160	507US	ANTI-FRICTION	4000	F3506VLF3JF	84/49	94.5	14	MXTDPM	$41,751

Open Enclosure

Open Drip-Proof (ODP)

High Efficiency

HP	Speed (RPM)	Volts	Frame	Bearing	Weight (lbs.)	Model Number	FL Amps	Nominal FL EFF	Notes	Discount Symbol	List Price
350	900	2300/4160	5810US	ANTI-FRICTION	5500	F3508VLF3JM	86/49	94.1	12	MXTDPM	$71,782
400	3600	2300/4160	507USS	ANTI-FRICTION	4000	F4002VLG3JF	91/51	94.5		MXTDPM	$37,982
400	1800	2300/4160	507US	ANTI-FRICTION	4000	F4004VLF3JF	90/52	94.5		MXTDPM	$38,170
400	1200	2300/4160	509US	ANTI-FRICTION	4500	F4006VLF3JF	99/58	95.2		MXTDPM	$51,088
400	900	2300/4160	5810US	ANTI-FRICTION	5500	F4008VLF3JM	98/56	94.1	12	MXTDPM	$73,031
450	3600	2300/4160	509USS	ANTI-FRICTION	4500	F4502VLG3JF	102/56	95.4		MXTDPM	$41,639
450	1800	2300/4160	509US	ANTI-FRICTION	4500	F4504VLF3JF	100/56	95.4		MXTDPM	$43,320
450	1200	2300/4160	509US	ANTI-FRICTION	4500	F4506VLF3JF	109/64	95	3, 14	MXTDPM	$57,537
450	900	2300/4160	5810US	ANTI-FRICTION	5500	F4508VLF3JM	109/63	94.4	12	MXTDPM	$76,202
500	3600	2300/4160	509USS	ANTI-FRICTION	4500	F5002VLG3JF	112/61	94.5		MXTDPM	$42,761
500	1800	2300/4160	509US	ANTI-FRICTION	4500	F5004VLF3JF	114/64	95.4		MXTDPM	$44,940
500	1200	2300/4160	5810US	ANTI-FRICTION	5500	F5006VLF3JM	114/66	95.3	12	MXTDPM	$76,916
500	900	2300/4160	5810US	ANTI-FRICTION	5500	F5008VLF3JM	122/70	95.2	12	MXTDPM	$79,793
600	1800	2300/4160	5810US	ANTI-FRICTION	5500	F6004VLF3JM	135/78	93.7	12	MXTDPM	$85,533
600	1200	2300/4160	5810US	ANTI-FRICTION	5500	F6006VLF3JM	139/81	95.4	12	MXTDPM	$86,099
700	1800	2300/4160	5810US	ANTI-FRICTION	5500	F7004VLF3JM	157/90	93.7	12	MXTDPM	$87,873
700	1200	2300/4160	5810US	ANTI-FRICTION	5500	F7006VLF3JM	162/93	96.1	12	MXTDPM	$88,377
800	1800	2300/4160	5810US	ANTI-FRICTION	5500	F8004VLF3JM	178/103	94.2	12	MXTDPM	$89,742
900	1800	2300/4160	5810US	ANTI-FRICTION	5500	F9004VLF3JM	200/115	94.7	12	MXTDPM	$91,900

FL Amps and FL EFF are average expected design values and not guaranteed.
The weights listed above are estimated.
Please contact Toshiba for information on product availability.
"CF" = Consult Factory

Open Enclosure

Weather Protected I (WPI)

High Efficiency

Toshiba's general purpose WPI, high efficiency motor series is designed to meet the industry's ever-increasing need for improved energy conservation and product reliability. These product lines offer a high torque and low vibration design leading to longer life and greater reliability. These motor offerings are completely customizable due to our in-house design, engineering, and manufacturing capabilities. This allows us to not only meet but exceed specific application requirements.

Product Scope:

Horsepower: 400 to 11,000 HP

Speed (60 Hz): 3600, 1800, 1200, or 900 RPM*

Volt (60 Hz): 2300/4000, or 4000 V**

Enclosure: Weather-Protected Type I: IP23

Frame Size: 5011/5012US through 1429

Construction: Cast Iron Frame, End Brackets, & Main Terminal Box for 5812 and smaller (Fabricated Steel Main Terminal Box for 6800 and Larger frames); Thick-Walled Heavy Fabricated Steel Frame for 1083 through 1429

Insulation: Class F with Class B Rise at 1.0 Service Factor by Resistance (Except Where Noted)

Environment: Recommended for Indoor Use

*Contact Toshiba for availability on lower speed designs

**Contact Toshiba for availability on 6000 and 13,200 V, 60 Hz motors

General Features:

- Winding RTDs (100 Ohm Platinum, Two per Phase) – Wired to an Auxiliary Box
- Space Heater (120 V, I, 60) – Wired to an Auxiliary Box
- Bearing RTDs/Vibration Provisions
- Insulated NDE Bearing for 5012, 5812, and 6800 Frames (for Anti-Friction Ball Bearing)
- Insulated NDE Bearing for 450, 1080, and 1420 Frames (for Anti-Friction Ball Bearing)
- Insulated Sleeve Bearings on Both Ends or Bearing Housing
- Copper Bar Rotor Construction (Where Noted)

Additional Options Available; See Catalog Production Modifications Section

HP	Speed (RPM)	Volts	Frame	Bearing	Weight (lbs.)	Model Number	FL Amps	Nominal FL EFF	Notes	Discount Symbol	List Price
400	3600	2300/4000	5011/12USS	ANTI-FRICTION	5000	4003WPAK11F-A	94/54	93.6	4	MXTWP1	$65,086
400	3600	2300/4000	5011/12USS	ANTI-FRICTION	5000	4003WPAK11F-C	94/54	93	4, 12	MXTWP1	$86,458
400	3600	2300/4000	5011/12USS	SLEEVE	5000	4003WPQK11F-A	94/54	93	4, 10	MXTWP1	$82,641
400	3600	2300/4000	5011/12USS	SLEEVE	5000	4003WPQK11F-C	94/54	93	4, 10, 12	MXTWP1	$104,013
400	1800	2300/4000	5011/12US	ANTI-FRICTION	5000	4004WPAK11E-A	95/55	92.4		MXTWP1	$67,547
400	1800	2300/4000	5011/12US	ANTI-FRICTION	5000	4004WPAK11E-C	93/54	92.4	12	MXTWP1	$88,919
400	1200	2300/4000	5011/12US	ANTI-FRICTION	5000	4006WPAK11E-A	99/57	92.7		MXTWP1	$74,079
400	1200	2300/4000	5011/12US	ANTI-FRICTION	5000	4006WPAK11E-C	103/60	93.8	12	MXTWP1	$95,450
450	3600	2300/4000	5011/12USS	ANTI-FRICTION	5000	4503WPAK11F-A	104/60	94.1	4	MXTWP1	$65,550

Open Enclosure

Weather Protected I (WPI)
High Efficiency

HP	Speed (RPM)	Volts	Frame	Bearing	Weight (lbs.)	Model Number	FL Amps	Nominal FL EFF	Notes	Discount Symbol	List Price
450	3600	2300/4000	5011/12USS	ANTI-FRICTION	5000	4503WPAK11F-C	104/60	93.6	4, 12	MXTWP1	$86,921
450	3600	2300/4000	5011/12USS	SLEEVE	5000	4503WPQK11F-A	104/60	93.6	4, 10	MXTWP1	$83,105
450	3600	2300/4000	5011/12USS	SLEEVE	5000	4503WPQK11F-C	104/60	93.6	4, 10, 12	MXTWP1	$104,477
450	1800	2300/4000	5011/12US	ANTI-FRICTION	5000	4504WPAK11E-A	106/61	93		MXTWP1	$68,513
450	1800	2300/4000	5011/12US	ANTI-FRICTION	5000	4504WPAK11E-C	101/58	92.4	12	MXTWP1	$89,884
450	1200	2300/4000	5011/12US	ANTI-FRICTION	5000	4506WPAK11E-A	113/65	93.5		MXTWP1	$75,044
450	1200	2300/4000	5011/12US	ANTI-FRICTION	5000	4506WPAK11E-C	116/67	94	12	MXTWP1	$96,416
500	3600	2300/4000	5011/12USS	ANTI-FRICTION	5000	5003WPAK11F-A	114/66	93.6	4	MXTWP1	$66,411
500	3600	2300/4000	5011/12USS	ANTI-FRICTION	5000	5003WPAK11F-C	114/66	93	4, 12	MXTWP1	$87,783
500	3600	2300/4000	5011/12USS	SLEEVE	5000	5003WPQK11F-A	114/66	93.6	4, 10	MXTWP1	$83,966
500	3600	2300/4000	5011/12USS	SLEEVE	5000	5003WPQK11F-C	114/66	93	4, 10, 12	MXTWP1	$105,337
500	1800	2300/4000	5011/12US	ANTI-FRICTION	5000	5004WPAK11E-A	114/66	93		MXTWP1	$68,981
500	1800	2300/4000	5011/12US	ANTI-FRICTION	5000	5004WPAK11E-C	113/65	92.4	12	MXTWP1	$90,353
500	1200	2300/4000	5011/12US	ANTI-FRICTION	5000	5006WPAK11E-A	128/74	93.6		MXTWP1	$75,513
500	1200	2300/4000	5011/12US	ANTI-FRICTION	5000	5006WPAK11E-C	130/75	94.2	12	MXTWP1	$96,884
600	3600	2300/4000	5011/12USS	ANTI-FRICTION	5000	6003WPAK11F-A	137/79	94.4	4	MXTWP1	$68,218
600	3600	2300/4000	5011/12USS	ANTI-FRICTION	5000	6003WPAK11F-C	137/79	94.1	4, 12	MXTWP1	$89,589
600	3600	2300/4000	5011/12USS	SLEEVE	5000	6003WPQK11F-A	137/79	94.1	4, 10	MXTWP1	$85,773
600	3600	2300/4000	5011/12USS	SLEEVE	5000	6003WPQK11F-C	137/79	94.1	4, 10, 12	MXTWP1	$107,144
600	1800	2300/4000	5011/12US	ANTI-FRICTION	5000	6004WPAK11E-A	139/80	93.5		MXTWP1	$69,968
600	1800	2300/4000	5011/12US	ANTI-FRICTION	5000	6004WPAK11E-C	133/77	93.4	12	MXTWP1	$91,339
600	1200	2300/4000	5011/12US	ANTI-FRICTION	5000	6006WPAK11E-C	157/90	94.2	12	MXTWP1	$99,141
600	900	4000	5811/12US	ANTI-FRICTION	7300	6008WPAL11E-A	93	94.3		MXTWP1	$91,427
600	900	4000	5811/12US	ANTI-FRICTION	7300	6008WPAL11E-C	84	94.7	12	MXTWP1	$114,835
700	3600	2300/4000	5011/12USS	ANTI-FRICTION	5000	7003WPAK11F-A	158/91	94.5	4	MXTWP1	$73,397
700	3600	2300/4000	5011/12USS	ANTI-FRICTION	5000	7003WPAK11F-C	158/91	94.3	4, 12	MXTWP1	$94,768
700	3600	2300/4000	5011/12USS	SLEEVE	5000	7003WPQK11F-A	158/91	94.2	4, 10	MXTWP1	$90,952
700	3600	2300/4000	5011/12USS	SLEEVE	5000	7003WPQK11F-C	158/91	94.3	4, 10, 12	MXTWP1	$112,323
700	1800	2300/4000	5011/12US	ANTI-FRICTION	5000	7004WPAK11E-A	165/95	94		MXTWP1	$78,143
700	1800	2300/4000	5011/12US	ANTI-FRICTION	5000	7004WPAK11E-C	151/87	93.7	12	MXTWP1	$99,514
700	1200	4000	5811/12US	ANTI-FRICTION	7300	7006WPAK11E-A	100	93.5		MXTWP1	$86,361
700	1200	4000	5811/12US	ANTI-FRICTION	7300	7006WPAK11E-C	100	93.5	12	MXTWP1	$109,767
700	900	4000	5811/12US	ANTI-FRICTION	7300	7008WPAL11E-A	108	94.3		MXTWP1	$93,627
700	900	4000	5811/12US	ANTI-FRICTION	7300	7008WPAL11E-C	99	94.9	12	MXTWP1	$117,033
800	3600	2300/4000	5011/12USS	ANTI-FRICTION	5000	8003WPAK11F-A	180/104	94.1	4	MXTWP1	$78,079
800	3600	2300/4000	5011/12USS	ANTI-FRICTION	5000	8003WPAK11F-C	180/104	94.1	4, 12	MXTWP1	$99,450
800	3600	2300/4000	5011/12USS	SLEEVE	5000	8003WPQK11F-A	180/104	93.8	4, 10	MXTWP1	$95,633
800	3600	2300/4000	5011/12USS	SLEEVE	5000	8003WPQK11F-C	180/104	94.1	4, 10, 12	MXTWP1	$117,006
800	3600	4000	5811/12USS	ANTI-FRICTION	7300	8003WPAL11F-A	102	95.2	4	MXTWP1	$89,680
800	3600	4000	5811/12USS	ANTI-FRICTION	7300	8003WPAL11F-C	103	95.1	4, 12	MXTWP1	$112,327
800	1800	2300/4000	5011/12US	ANTI-FRICTION	5000	8004WPAK11E-A	187/108	93.6		MXTWP1	$82,696
800	1800	2300/4000	5011/12US	ANTI-FRICTION	5000	8004WPAK11E-C	174/100	94.1	12	MXTWP1	$104,068
800	1200	4000	5811/12US	ANTI-FRICTION	7300	8006WPAL11E-A	115	94.5		MXTWP1	$94,989
800	1200	4000	5811/12US	ANTI-FRICTION	7300	8006WPAL11E-C	108	94.8	12	MXTWP1	$118,397
800	900	4000	6810/11/12US	ANTI-FRICTION	14500	8008WPAL11E-C	108	94.9	12	MXTWP1	$194,312
800	900	4000	6810/11/12US	SLEEVE	15000	8008WPQL11E-C	108	94.9	10, 12	MXTWP1	$208,999
900	3600	4000	5811/12USS	ANTI-FRICTION	7300	9003WPAL11F-A	114	95.4	4	MXTWP1	$90,155
900	3600	4000	5811/12USS	ANTI-FRICTION	7300	9003WPAL11F-C	110	95.8	4, 12	MXTWP1	$113,562

Open Enclosure

Weather Protected I (WPI) High Efficiency

HP	Speed (RPM)	Volts	Frame	Bearing	Weight (lbs.)	Model Number	FL Amps	Nominal FL EFF	Notes	Discount Symbol	List Price
900	3600	4000	5811/12USS	SLEEVE	7500	9003WPQL11F-A	114	95.3	4, 10	MXTWP1	$108,431
900	3600	4000	5811/12USS	SLEEVE	7500	9003WPQL11F-C	110	95.7	4, 10, 12	MXTWP1	$131,881
900	1800	4000	5811/12US	ANTI-FRICTION	7300	9005WPAL11E-A	113	95.5	4	MXTWP1	$91,870
900	1800	4000	5811/12US	ANTI-FRICTION	7300	9005WPAL11E-C	117	95.6	4, 12	MXTWP1	$115,276
900	1800	4000	5811/12US	SLEEVE	7500	9005WPQL11E-A	113	95.5	4, 10	MXTWP1	$110,189
900	1800	4000	5811/12US	SLEEVE	7500	9005WPQL11E-C	113	95.5	4, 10, 12	MXTWP1	$133,596
900	1200	4000	5811/12US	ANTI-FRICTION	7300	9006WPAL11E-A	124	94.5		MXTWP1	$97,331
900	1200	4000	5811/12US	ANTI-FRICTION	7300	9006WPAL11E-C	125	94.9	12	MXTWP1	$120,739
900	900	4000	6810/11/12US	ANTI-FRICTION	14500	9008WPAL11E-C	121	95	12	MXTWP1	$196,820
900	900	4000	6810/11/12US	SLEEVE	15000	9008WPQL11E-C	121	95	10, 12	MXTWP1	$211,627
1000	3600	4000	5811/12USS	ANTI-FRICTION	7300	M203WPAL11F-A	126	95.5	4	MXTWP1	$91,390
1000	3600	4000	5811/12USS	ANTI-FRICTION	7300	M203WPAL11F-C	122	96	4, 12	MXTWP1	$114,797
1000	3600	4000	5811/12USS	SLEEVE	7500	M203WPQL11F-A	126	95.4	4, 10	MXTWP1	$109,708
1000	3600	4000	5811/12USS	SLEEVE	7500	M203WPQL11F-C	122	95.9	4, 10, 12	MXTWP1	$133,115
1000	1800	4000	5811/12US	ANTI-FRICTION	7300	M205WPAL11E-A	128	95.4	4	MXTWP1	$94,096
1000	1800	4000	5811/12US	ANTI-FRICTION	7300	M205WPAL11E-C	131	95.7	4, 12	MXTWP1	$117,502
1000	1800	4000	5811/12US	SLEEVE	7500	M205WPQL11E-A	128	95.4	4, 10	MXTWP1	$112,414
1000	1800	4000	5811/12US	SLEEVE	7500	M205WPQL11E-C	131	95.6	4, 10, 12	MXTWP1	$135,820
1000	1200	4000	5811/12US	ANTI-FRICTION	7300	M206WPAL11E-A	140	94.5	3, 14	MXTWP1	$99,975
1000	1200	4000	5811/12US	ANTI-FRICTION	7300	M206WPAL11E-C	137	94.6	3, 12, 14	MXTWP1	$123,383
1000	1200	4000	6810/11/12US	ANTI-FRICTION	14500	M207WPAL11E-C	125	94.7	4, 12	MXTWP1	$209,380
1000	1200	4000	6810/11/12US	SLEEVE	15000	M207WPQL11E-C	125	94.7	4, 10, 12	MXTWP1	$225,607
1000	900	4000	6812/13US	ANTI-FRICTION	15500	M208WPAL11E-C	134	95.2	12	MXTWP1	$206,520
1000	900	4000	6812/13US	SLEEVE	15000	M208WPQL11E-C	134	95.2	10, 12	MXTWP1	$221,327
1250	3600	4000	5811/12USS	ANTI-FRICTION	7300	M253WPAL11F-A	158	95.7	4	MXTWP1	$96,433
1250	3600	4000	5811/12USS	ANTI-FRICTION	7300	M253WPAL11F-C	153	96.2	4, 12	MXTWP1	$119,840
1250	3600	4000	5811/12USS	SLEEVE	7500	M253WPQL11F-A	158	95.6	4, 10	MXTWP1	$114,751
1250	3600	4000	5811/12USS	SLEEVE	7500	M253WPQL11F-C	153	96.1	4, 10, 12	MXTWP1	$138,158
1250	1800	4000	5811/12US	ANTI-FRICTION	7300	M255WPAL11E-A	159	95.5	4	MXTWP1	$100,627
1250	1800	4000	5811/12US	ANTI-FRICTION	7300	M255WPAL11E-C	162	95.9	4, 12	MXTWP1	$124,034
1250	1800	4000	5811/12US	SLEEVE	7500	M255WPQL11E-A	159	95.5	4, 10	MXTWP1	$118,945
1250	1800	4000	5811/12US	SLEEVE	7500	M255WPQL11E-C	162	95.8	10, 12	MXTWP1	$142,353
1250	1200	4000	6810/11/12US	ANTI-FRICTION	14500	M257WPAL11E-C	157	94.9	12	MXTWP1	$213,190
1250	1200	4000	6810/11/12US	SLEEVE	15000	M257WPQL11E-C	157	94.9	10, 12	MXTWP1	$227,997
1250	900	4000	6812/13US	ANTI-FRICTION	15500	M258WPAL11E-C	169	95.3	12	MXTWP1	$218,600
1250	900	4000	6812/13US	SLEEVE	15000	M258WPQL11E-C	169	95.3	10, 12	MXTWP1	$233,407
1500	3600	4000	5811/12USS	ANTI-FRICTION	7300	M303WPAL11F-A	189	95.8	4	MXTWP1	$101,155
1500	3600	4000	5811/12USS	ANTI-FRICTION	7300	M303WPAL11F-C	183	96.2	4, 12	MXTWP1	$124,562
1500	3600	4000	5811/12USS	SLEEVE	7500	M303WPQL11F-A	189	95.7	4, 10	MXTWP1	$119,473
1500	3600	4000	5811/12USS	SLEEVE	7500	M303WPQL11F-C	183	96.1	4, 10, 12	MXTWP1	$142,880
1500	1800	4000	5811/12USS	ANTI-FRICTION	7300	M305WPAL11E-A	189	95.6	4	MXTWP1	$104,211
1500	1800	4000	5811/12USS	ANTI-FRICTION	7300	M305WPAL11E-C	193	96	4, 12	MXTWP1	$127,617
1500	1800	4000	5811/12USS	SLEEVE	7500	M305WPQL11E-A	189	95.6	4, 10	MXTWP1	$122,529
1500	1800	4000	5811/12USS	SLEEVE	7500	M305WPQL11E-C	193	95.9	4, 10, 12	MXTWP1	$145,935
1500	1200	4000	5811/12USS	ANTI-FRICTION	14500	M307WPAL11E-C	187	95	4, 12	MXTWP1	$219,320
1500	1200	4000	6810/11/12US	SLEEVE	15000	M307WPQL11E-C	187	95	4, 10, 12	MXTWP1	$234,127
1500	900	4000	5811/12USS	ANTI-FRICTION	14500	M308WPAL11E-C	205	95.4	10, 12	MXTWP1	$228,730
1500	900	4000	6810/11/12US	SLEEVE	15000	M308WPQL11E-C	205	95.4	10, 12	MXTWP1	$243,537

Open Enclosure

Weather Protected I (WPI)
High Efficiency

HP	Speed (RPM)	Volts	Frame	Bearing	Weight (lbs.)	Model Number	FL Amps	Nominal FL EFF	Notes	Discount Symbol	List Price
1750	3600	4000	5811/12USS	ANTI-FRICTION	7300	M353WPAL11F-A	224	95.8	4	MXTWP1	$104,493
1750	3600	4000	5811/12USS	ANTI-FRICTION	7300	M353WPAL11F-C	216	96.1	4, 12	MXTWP1	$127,900
1750	3600	4000	5811/12USS	SLEEVE	7500	M353WPQL11F-A	224	95.6	4, 10	MXTWP1	$122,811
1750	3600	4000	5811/12USS	SLEEVE	7500	M353WPQL11F-C	216	95.9	4, 10, 12, 14	MXTWP1	$146,219
1750	1800	4000	5811/12US	ANTI-FRICTION	7300	M355WPAL11E-A	221	95.5	4, 14	MXTWP1	$106,082
1750	1800	4000	5811/12US	SLEEVE	7500	M355WPQL11E-A	221	95.5	4, 10, 14	MXTWP1	$124,400
1750	1800	4000	6810/11/12US	ANTI-FRICTION	14500	M355WPAL11E-CF	219	95.8	4, 12	MXTWP1	$219,230
1750	1800	4000	6810/11/12US	SLEEVE	15000	M355WPQL11E-CF	219	95.8	4, 10, 12	MXTWP1	$234,037
1750	1200	4000	6810/11/12US	ANTI-FRICTION	14500	M357WPAL11E-C	218	95.3	4, 12	MXTWP1	$227,712
1750	1200	4000	6810/11/12US	SLEEVE	15000	M357WPQL11E-C	218	95.3	4, 10, 12	MXTWP1	$242,519
1750	900	4000	R1083	ANTI-FRICTION	17000	J1758GLF3I-M	239	95.9	11, 12	MXTWP1	$253,556
1750	900	4000	R1083	SLEEVE	17000	J1758GLFLI-M	240	95.7	11, 12	MXTWP1	$275,006
2000	3600	4000	5811/12USS	ANTI-FRICTION	7300	M403WPAL11F-A	253	95.8	4, 14	MXTWP1	$108,298
2000	3600	4000	5811/12USS	ANTI-FRICTION	7300	M403WPAL11F-C	245	96.1	4, 12, 14	MXTWP1	$131,704
2000	3600	4000	5811/12USS	SLEEVE	7500	M403WPQL11F-A	253	95.7	4, 10, 14	MXTWP1	$126,616
2000	3600	4000	6810/11/12USS	SLEEVE	15000	M403WPQL11F-CF	249	95.2	4, 10, 12	MXTWP1	$248,541
2000	1800	4000	6810/11/12US	ANTI-FRICTION	14500	M405WPAL11E-C	250	95.9	4, 12	MXTWP1	$225,832
2000	1800	4000	6810/11/12US	SLEEVE	15000	M405WPQL11E-C	250	95.9	4, 10, 12	MXTWP1	$240,639
2000	1200	4000	6810/11/12US	ANTI-FRICTION	14500	M407WPAL11E-C	250	95.3	4, 12	MXTWP1	$238,610
2000	1200	4000	6810/11/12US	SLEEVE	15000	M407WPQL11E-C	250	95.3	4, 10, 12	MXTWP1	$253,417
2000	900	4000	R1083	ANTI-FRICTION	17000	J2008GLF3I-M	271	96.2	11, 12	MXTWP1	$259,630
2000	900	4000	R1083	SLEEVE	17000	J2008GLFLI-M	271	96	11, 12	MXTWP1	$281,080
2250	3600	4000	6810/11/12USS	SLEEVE	15000	M453WPQL11F-C	279	95.4	4, 10, 12	MXTWP1	$265,389
2250	1800	4000	6810/11/12US	ANTI-FRICTION	14500	M455WPAL11E-C	278	96	4, 12	MXTWP1	$238,103
2250	1800	4000	6810/11/12US	SLEEVE	15000	M455WPQL11E-C	278	96	4, 10, 12	MXTWP1	$252,910
2250	1200	4000	6812/13US	ANTI-FRICTION	15500	M457WPAL11E-C	281	95.6	4, 12	MXTWP1	$249,680
2250	1200	4000	6812/13US	SLEEVE	15000	M457WPQL11E-C	281	95.6	4, 10, 12	MXTWP1	$264,487
2250	900	4000	R1083	ANTI-FRICTION	17000	J2258GLF3I-M	303	96.4	11, 12	MXTWP1	$262,585
2250	900	4000	R1083	SLEEVE	17000	J2258GLFLI-M	304	96.2	11, 12	MXTWP1	$284,035
2500	3600	4000	6810/11/12USS	SLEEVE	15000	M503WPQL11F-C	309	95.7	4, 10, 12	MXTWP1	$278,639
2500	1800	4000	6810/11/12US	ANTI-FRICTION	14500	M505WPAL11E-C	309	96.3	4, 12	MXTWP1	$247,402
2500	1800	4000	6810/11/12US	SLEEVE	15000	M505WPQL11E-C	309	96.3	4, 10, 12	MXTWP1	$262,209
2500	1200	4000	6812/13US	ANTI-FRICTION	15500	M507WPAL11E-C	318	95.9	4, 12	MXTWP1	$261,320
2500	1200	4000	6812/13US	SLEEVE	15000	M507WPQL11E-C	318	95.9	4, 10, 12	MXTWP1	$276,127
2500	900	4000	R1085	ANTI-FRICTION	17000	J2508GLF3I-M	335	96.5	11, 12	MXTWP1	$268,366
2500	900	4000	R1085	SLEEVE	17000	J2508GLFLI-M	336	96.3	11, 12	MXTWP1	$289,816
2750	3600	4000	6810/11/12USS	SLEEVE	15000	M553WPQL11F-C	337	96.3	4, 10, 12	MXTWP1	$293,765
2750	1800	4000	6812/13US	ANTI-FRICTION	15500	M555WPAL11F-C	368	96	4, 12	MXTWP1	$259,730
2750	1800	4000	6812/13US	SLEEVE	15000	M555WPQL11F-C	368	96	4, 10, 12	MXTWP1	$274,537
2750	1200	4000	6812/13US	ANTI-FRICTION	15500	M557WPAL11F-C	368	95.9	3, 4, 12, 14	MXTWP1	$272,190
2750	1200	4000	6812/13US	SLEEVE	15000	M557WPQL11F-C	368	95.9	3, 4, 10, 12, 14	MXTWP1	$286,997
2750	900	4000	R1087	ANTI-FRICTION	17000	J2758GLF3I-M	377	95.8	11, 12	MXTWP1	$281,667
2750	900	4000	R1087	SLEEVE	17000	J2758GLFLI-M	377	95.8	11, 12	MXTWP1	$303,117
3000	3600	4000	6810/11/12USS	SLEEVE	15000	M603WPQL11F-C	370	96.1	4, 10, 12	MXTWP1	$306,465
3000	1800	4000	6812/13US	ANTI-FRICTION	15500	M605WPAL11E-C	369	96.5	4, 12	MXTWP1	$272,389
3000	1800	4000	6812/13US	SLEEVE	15000	M605WPQL11E-C	369	96.5	4, 10, 12	MXTWP1	$287,196
3000	900	4000	R1087	ANTI-FRICTION	17000	J3008GLF3I-M	416	95.6	11, 12	MXTWP1	$296,882
3000	900	4000	R1087	SLEEVE	17000	J3008GLFLI-M	416	95.6	11, 12	MXTWP1	$318,332

Open Enclosure

Weather Protected I (WPI) High Efficiency

HP	Speed (RPM)	Volts	Frame	Bearing	Weight (lbs.)	Model Number	FL Amps	Nominal FL EFF	Notes	Discount Symbol	List Price
3500	3600	4000	6810/11/12USS	SLEEVE	15000	M703WPQL11F-C	431	96.2	4, 10, 12	MXTWP1	$319,281
3500	1800	4000	6812/13US	ANTI-FRICTION	15500	M705WPAL11E-C	431	96.6	4, 12	MXTWP1	$283,780
3500	1800	4000	6812/13US	SLEEVE	15000	M705WPQL11E-C	431	96.6	4, 10, 12	MXTWP1	$298,587
3500	1200	4000	R1085	ANTI-FRICTION	17000	J3507GLF3I-M	458	95.9	11, 12	MXTWP1	$305,664
3500	1200	4000	R1085	SLEEVE	17000	J3507GLFLI-M	458	95.9	11, 12	MXTWP1	$327,114
3500	900	4000	R1087	ANTI-FRICTION	17000	J3508GLF3I-M	482	95.7	11, 12	MXTWP1	$332,568
3500	900	4000	R1087	SLEEVE	17000	J3508GLFLI-M	482	95.7	11, 12	MXTWP1	$354,018
4000	3600	4000	6810/11/12USS	SLEEVE	15000	M803WPQL11F-CF	485	95.6	3, 4, 10, 12, 14	MXTWP1	$324,890
4000	3600	4000	6812/13USS	SLEEVE	15000	M803WPQL11F-C	490	96	4, 10, 12	MXTWP1	$326,710
4000	1800	4000	450-1600	ANTI-FRICTION	15500	M805WPAL11E-CF	495	96.6	4 , 12	MXTWP1	$321,420
4000	1800	4000	450-1600	SLEEVE	16000	M805WPQL11E-CF	495	96.6	4, 10, 12	MXTWP1	$332,805
4000	1800	4000	6812/13US	ANTI-FRICTION	15500	M805WPAL11E-C	495	96.6	3, 4, 12, 14	MXTWP1	$297,360
4000	1800	4000	6812/13US	SLEEVE	15000	M805WPQL11E-C	495	96.6	3, 4, 10, 12, 14	MXTWP1	$312,167
4000	1200	4000	R1087	ANTI-FRICTION	17000	J4007GLF3I-M	522	95.9	4, 11, 12	MXTWP1	$336,557
4000	1200	4000	R1087	SLEEVE	17000	J4007GLFLI-M	522	95.9	4, 11, 12	MXTWP1	$358,007
4000	900	4000	R1089	ANTI-FRICTION	17000	J4008GLF3I-M	547	95.8	11, 12	MXTWP1	$346,580
4000	900	4000	R1089	SLEEVE	17000	J4008GLFLI-M	547	95.8	11, 12	MXTWP1	$368,030
4500	3600	4000	6812/13USS	SLEEVE	15000	M903WPQL11F-C	538	96.3	4, 10, 12	MXTWP1	$329,640
4500	1800	4000	R1085	ANTI-FRICTION	17000	J4505GLF3I-M	575	96.8	4, 11, 12	MXTWP1	$326,412
4500	1200	4000	1087	ANTI-FRICTION	17000	J4507GLF3I-M	585	96.1	4, 11, 12	MXTWP1	$354,336
4500	1200	4000	1087	SLEEVE	17000	J4507GLFLI-M	585	96.1	4, 11, 12	MXTWP1	$375,786
4500	1200	4000	R1085	ANTI-FRICTION	17000	J4507GLF3I-MF	585	96.1	4, 11, 12, 14	MXTWP1	$344,585
4500	900	4000	1089	ANTI-FRICTION	17000	J4508GLF3I-M	613	96	11, 12	MXTWP1	$378,704
4500	900	4000	1089	SLEEVE	17000	J4508GLFLI-M	613	96	11, 12	MXTWP1	$400,154
5000	3600	4000	450-1600	SLEEVE	16000	C203WPQL11F-C	603	96.9	4, 10, 12	MXTWP1	$342,468
5000	3600	4000	6812/13USS	SLEEVE	15000	C203WPQL11F-CF	617	96.5	4, 10, 12	MXTWP1	$332,760
5000	1800	4000	1087	ANTI-FRICTION	17000	J5005GLF3I-M	624	96.3	4, 11, 12	MXTWP1	$338,480
5000	1800	4000	1087	SLEEVE	17000	J5005GLFLI-M	624	96.3	4, 11, 12	MXTWP1	$338,480
5000	1200	4000	1089	ANTI-FRICTION	17000	J5007GLF3I-M	649	96	4, 11, 12	MXTWP1	$362,502
5000	1200	4000	1089	SLEEVE	17000	J5007GLFLI-M	649	96	4, 11, 12	MXTWP1	$383,952
5000	900	4000	1425	ANTI-FRICTION	18000	J5008GLF3I-M	676	96.2	11, 12	MXTWP1	$389,642
5000	900	4000	1425	SLEEVE	18000	J5008GLFLI-M	676	96.2	11, 12	MXTWP1	$411,092
6000	1800	4000	1087	ANTI-FRICTION	17000	J6005GLF3I-M	748	96.3	4, 11, 12	MXTWP1	$345,776
6000	1800	4000	1087	SLEEVE	17000	J6005GLFLI-M	748	96.3	4, 11, 12	MXTWP1	$345,776
6000	1200	4000	1089	ANTI-FRICTION	17000	J6007GLF3I-M	778	96.3	4, 11, 12	MXTWP1	$384,225
6000	1200	4000	1089	SLEEVE	17000	J6007GLFLI-M	778	96.3	4, 11, 12	MXTWP1	$405,675
6000	900	4000	1425	ANTI-FRICTION	18000	J6008GLF3I-M	810	96.2	11, 12	MXTWP1	$406,554
6000	900	4000	1425	SLEEVE	18000	J6008GLFLI-M	810	96.2	11, 12	MXTWP1	$428,004
7000	1800	4000	1089	ANTI-FRICTION	17000	J7005GLF3I-M	873	96.5	4, 11, 12	MXTWP1	$352,498
7000	1800	4000	1089	SLEEVE	17000	J7005GLFLI-M	873	96.5	4, 11, 12	MXTWP1	$352,498
7000	1200	4000	1425	ANTI-FRICTION	18000	J7007GLF3I-M	904	96.4	4, 11, 12	MXTWP1	$314,487
7000	1200	4000	1425	SLEEVE	18000	J7007GLFLI-M	904	96.4	4, 11, 12	MXTWP1	$335,937
7000	900	4000	1427	ANTI-FRICTION	18000	J7008GLF3I-M	923	96.7	11, 12	MXTWP1	$418,689
7000	900	4000	1427	SLEEVE	18000	J7008GLFLI-M	923	96.7	11, 12	MXTWP1	$440,139
8000	1800	4000	1089	ANTI-FRICTION	17000	J8005GLF3I-M	995	96.5	4, 11, 12	MXTWP1	$358,964
8000	1800	4000	1089	SLEEVE	17000	J8005GLFLI-M	995	96.5	4, 11, 12	MXTWP1	$358,964
8000	1200	4000	1425	ANTI-FRICTION	18000	J8007GLF3I-M	1028	96	4, 11, 12	MXTWP1	$326,478
8000	1200	4000	1425	SLEEVE	18000	J8007GLFLI-M	1028	96	4, 11, 12	MXTWP1	$347,928

Open Enclosure

Weather Protected I (WPI)
High Efficiency

HP	Speed (RPM)	Volts	Frame	Bearing	Weight (lbs.)	Model Number	FL Amps	Nominal FL EFF	Notes	Discount Symbol	List Price
8000	900	4000	1429	ANTI-FRICTION	18000	J8008GLF3I-M	1054	96.7	11, 12	MXTWP1	$432,442
8000	900	4000	1429	SLEEVE	18000	J8008GLFLI-M	1054	96.7	11, 12	MXTWP1	$453,892
9000	1800	4000	1425	ANTI-FRICTION	18000	J9005GLF3I-M	1121	96.7	4, 11, 12	MXTWP1	$364,742
9000	1800	4000	1425	SLEEVE	18000	J9005GLFLI-M	1121	96.7	4, 11, 12	MXTWP1	$364,742
9000	1200	4000	1427	ANTI-FRICTION	18000	J9007GLF3I-M	1141	96.8	4, 11, 12	MXTWP1	$347,306
9000	1200	4000	1427	SLEEVE	18000	J9007GLFLI-M	1141	96.8	4, 11, 12	MXTWP1	$368,756
9000	900	4000	1429	ANTI-FRICTION	18000	J9008GLF3I-M	1177	96.8	11, 12	MXTWP1	$449,632
9000	900	4000	1429	SLEEVE	18000	J9008GLFLI-M	1177	96.8	11, 12	MXTWP1	$471,082
10000	1800	4000	1427	ANTI-FRICTION	18000	K1005GLF3I-M	1243	96.7	4, 11, 12	MXTWP1	$379,105
10000	1800	4000	1427	SLEEVE	18000	K1005GLFLI-M	1243	96.7	4, 11, 12	MXTWP1	$379,105
10000	1200	4000	1427	ANTI-FRICTION	18000	K1007GLF3I-M	CF	CF	4, 11, 12	MXTWP1	$368,770
10000	1200	4000	1427	SLEEVE	18000	K1007GLFLI-M	CF	CF	4, 11, 12	MXTWP1	$390,220
11000	1800	4000	1427	ANTI-FRICTION	18000	K1105GLF3I-M	CF	CF	4, 11, 12	MXTWP1	$393,552
11000	1800	4000	1427	SLEEVE	18000	K1105GLFLI-M	CF	CF	4, 11, 12	MXTWP1	$393,552
11000	1200	4000	1429	ANTI-FRICTION	18000	K1107GLF3I-M	CF	CF	4, 11, 12	MXTWP1	$385,488
11000	1200	4000	1429	SLEEVE	18000	K1107GLFLI-M	CF	CF	4, 11, 12	MXTWP1	$406,938

FL Amps and FL EFF are average expected design values and not guaranteed.
The weights listed above are estimated.
Please contact Toshiba for information on product availability.
"CF" = Consult Factory

Open Enclosure

Weather Protected II (WPII)

High Efficiency

Toshiba's general purpose, medium voltage WPII, high efficiency motor series is designed to meet the industry's ever-increasing need for improved energy conservation and product reliability. This product line offers a high torque and low vibration design leading to longer life and greater reliability. These motor offerings are completely customizable due to our in-house design, engineering, and manufacturing capabilities. This allows us to not only meet but exceed specific application requirements.

Product Scope:

Horsepower: 400 to 11,000 HP

Speed (60 Hz): 3600, 1800, 1200, or 900 RPM*

Volt (60 Hz): 2300/4000 or 4000 V**

Enclosure: Weather-Protected Type II: IP24

Frame Size: 5011/12US through 1429

Construction: Cast Iron Frame, End Brackets, & Main Terminal Box (Fabricated Steel Main Terminal Box for IEC, 6800 and Larger Frames); Thick-Walled Heavy Fabricated Steel Frame for 1080 through 1420

Insulation: Class F with Class B Rise at 1.0 Service Factor

Environment: Suitable for Indoor or Outdoor Use

*Contact Toshiba for availability on lower speed designs
**Contact Toshiba for availability on 6000 and 13,200 V, 60 Hz motors

General Features:

- Winding RTDs (100 Ohm Platinum, Two per Phase) – Wired to an Auxiliary Box
- Space Heater (120 V, I, 60) – Wired to an Auxiliary Box
- Bearing RTDs/Vibration Provisions
- Insulated NDE Bearing for 450, 5000, 5800, and 6800 Frames (for Anti-Friction Ball Bearing)
- Insulated NDE Bearing for 1080 and 1420 Frames (for Anti-Friction Ball Bearing) (Where Noted)
- High Pressure Die Cast Aluminum Rotor, Available in Copper Bar Rotor Construction (Where Noted)
- Available with Insulated Sleeve Bearings (Where Noted)

Additional Options Available; See Catalog Production Modifications Section

HP	Speed (RPM)	Volts	Frame	Bearing	Weight (lbs.)	Model Number	FL Amps	Nominal FL EFF	Notes	Discount Symbol	List Price
400	3600	2300/4000	5011/12USS	ANTI-FRICTION	5000	4003WTAK11F-A	94/54	93.6	4	MXTWP2	$65,873
400	3600	2300/4000	5011/12USS	ANTI-FRICTION	5000	4003WTAK11F-C	94/54	93	4, 12	MXTWP2	$87,245
400	3600	2300/4000	5011/12USS	SLEEVE	5000	4003WTQK11F-A	94/54	93	4, 10	MXTWP2	$83,429
400	3600	2300/4000	5011/12USS	SLEEVE	5000	4003WTQK11F-C	94/54	93	4, 10, 12	MXTWP2	$104,800
400	1800	2300/4000	5011/12US	ANTI-FRICTION	5000	4004WTAK11E-A	94/54	93		MXTWP2	$68,387
400	1800	2300/4000	5011/12US	ANTI-FRICTION	5000	4004WTAK11E-C	89/51	92.4	12	MXTWP2	$85,942
400	1200	2300/4000	5011/12US	ANTI-FRICTION	5000	4006WTAK11E-A	97/56	92.9		MXTWP2	$77,905
400	1200	2300/4000	5011/12US	ANTI-FRICTION	5000	4006WTAK11E-C	103/60	94	12	MXTWP2	$99,277
400	900	4000	5811/12US	ANTI-FRICTION	7300	4008WTAL11E-A	60	94.3		MXTWP2	$84,223
400	900	4000	5811/12US	ANTI-FRICTION	7300	4008WTAL11E-C	60	94.3	12	MXTWP2	$107,630
450	3600	2300/4000	5011/12USS	ANTI-FRICTION	5000	4503WTAK11F-A	104/60	94.1	4	MXTWP2	$66,953
450	3600	2300/4000	5011/12USS	ANTI-FRICTION	5000	4503WTAK11F-C	104/60	93.6	4, 12	MXTWP2	$88,324
450	3600	2300/4000	5011/12USS	SLEEVE	5000	4503WTQK11F-A	104/60	93.6	4, 10	MXTWP2	$84,509
450	3600	2300/4000	5011/12USS	SLEEVE	5000	4503WTQK11F-C	104/60	93.6	4, 10, 12	MXTWP2	$105,880
450	1800	2300/4000	5011/12US	ANTI-FRICTION	5000	4504WTAK11E-A	106/61	93		MXTWP2	$69,975
450	1800	2300/4000	5011/12US	ANTI-FRICTION	5000	4504WTAK11E-C	103/59	93	12	MXTWP2	$91,347
450	1200	2300/4000	5011/12US	ANTI-FRICTION	5000	4506WTAK11E-A	113/65	93.6		MXTWP2	$79,676
450	1200	2300/4000	5011/12US	ANTI-FRICTION	5000	4506WTAK11E-C	116/67	94.3	12	MXTWP2	$101,048
450	900	4000	5811/12US	ANTI-FRICTION	7300	4508WTAL11E-A	66	93.8		MXTWP2	$86,972

Open Enclosure

Weather Protected II (WPII)
High Efficiency

HP	Speed (RPM)	Volts	Frame	Bearing	Weight (lbs.)	Model Number	FL Amps	Nominal FL EFF	Notes	Discount Symbol	List Price
450	900	4000	5811/12US	ANTI-FRICTION	7300	4508WTAL11E-C	61	95.4	12	MXTWP2	$110,378
500	3600	2300/4000	5011/12USS	ANTI-FRICTION	5000	5003WTAK11F-A	114/66	93.6	4	MXTWP2	$69,208
500	3600	2300/4000	5011/12USS	ANTI-FRICTION	5000	5003WTAK11F-C	114/66	93.6	4, 12	MXTWP2	$90,579
500	3600	2300/4000	5011/12USS	SLEEVE	5000	5003WTQK11F-A	114/66	93.6	4, 10	MXTWP2	$86,762
500	3600	2300/4000	5011/12USS	SLEEVE	5000	5003WTQK11F-C	114/66	93.6	4, 10, 12	MXTWP2	$108,134
500	1800	2300/4000	5011/12US	ANTI-FRICTION	5000	5004WTAK11E-A	114/66	93		MXTWP2	$72,210
500	1800	2300/4000	5011/12US	ANTI-FRICTION	5000	5004WTAK11E-C	112/65	93	12	MXTWP2	$93,582
500	1200	2300/4000	5011/12US	ANTI-FRICTION	5295	5006WTAK11E-A	126/73	93.8		MXTWP2	$83,182
500	1200	2300/4000	5011/12US	ANTI-FRICTION	5295	5006WTAK11E-C	130/75	94.5	12	MXTWP2	$104,553
500	900	4000	5811/12US	ANTI-FRICTION	7300	5008WTAL11E-A	75	95.6		MXTWP2	$89,523
500	900	4000	5811/12US	ANTI-FRICTION	7300	5008WTAL11E-C	69	93.9	12	MXTWP2	$112,930
600	3600	2300/4000	5011/12USS	ANTI-FRICTION	5000	6003WTAK11F-A	137/79	94.2	4	MXTWP2	$72,103
600	3600	2300/4000	5011/12USS	ANTI-FRICTION	4500	6003WTAK11F-C	137/69	94.3	4, 12	MXTWP2	$93,475
600	3600	2300/4000	5011/12USS	SLEEVE	5000	6003WTQK11F-A	137/79	94.2	4, 10	MXTWP2	$89,659
600	3600	2300/4000	5011/12USS	SLEEVE	5000	6003WTQK11F-C	137/69	94.3	4, 10, 12	MXTWP2	$111,030
600	1800	2300/4000	5011/12US	ANTI-FRICTION	5000	6004WTAK11E-A	137/79	93.7		MXTWP2	$73,589
600	1800	2300/4000	5011/12US	ANTI-FRICTION	5000	6004WTAK11E-C	130/75	93.4	12	MXTWP2	$94,960
600	1200	4000	5811/12US	ANTI-FRICTION	7300	6006WTAL11E-A	86	93.4		MXTWP2	$89,069
600	1200	4000	5811/12US	ANTI-FRICTION	7300	6006WTAL11E-C	86	93.4	12	MXTWP2	$112,475
600	900	4000	5811/12US	ANTI-FRICTION	7300	6008WTAL11E-A	93	95.6		MXTWP2	$94,911
600	900	4000	5811/12US	ANTI-FRICTION	7300	6008WTAL11E-C	84	94.2	12	MXTWP2	$118,317
700	3600	2300/4000	5011/12USS	ANTI-FRICTION	5000	7003WTAK11F-A	159/92	94.5	4	MXTWP2	$77,280
700	3600	2300/4000	5011/12USS	ANTI-FRICTION	5000	7003WTAK11F-C	158/91	94.4	4, 12	MXTWP2	$98,651
700	3600	2300/4000	5011/12USS	SLEEVE	5000	7003WTQK11F-A	159/92	94.3	4, 10	MXTWP2	$94,835
700	3600	2300/4000	5011/12USS	SLEEVE	5000	7003WTQK11F-C	158/91	94.4	4, 10, 12	MXTWP2	$116,206
700	3600	4000	5809/10/11USS	ANTI-FRICTION	7000	7003WTAL11F-AF	88	94.7	4	MXTWP2	$81,855
700	3600	4000	5809/10/11USS	ANTI-FRICTION	7000	7003WTAL11F-CF	89	94.8	4, 12	MXTWP2	$102,742
700	3600	4000	5809/10/11USS	SLEEVE	7300	7003WTQL11F-AF	88	94.5	4, 10	MXTWP2	$97,648
700	3600	4000	5809/10/11USS	SLEEVE	7300	7003WTQL11F-CF	89	94.5	4, 10, 12	MXTWP2	$119,470
700	1800	2300/4000	5011/12US	ANTI-FRICTION	5000	7004WTAK11E-A	165/95	94.2		MXTWP2	$78,801
700	1800	2300/4000	5011/12US	ANTI-FRICTION	5000	7004WTAK11E-C	151/87	93.9	12	MXTWP2	$100,173
700	1200	4000	5811/12US	ANTI-FRICTION	7300	7006WTAL11E-A	100	95.6		MXTWP2	$89,982
700	1200	4000	5811/12US	ANTI-FRICTION	7300	7006WTAL11E-C	94	93.5	12	MXTWP2	$113,389
700	900	4000	5811/12US	ANTI-FRICTION	7300	7008WTAL11E-A	108	95.8		MXTWP2	$97,574
700	900	4000	5811/12US	ANTI-FRICTION	7300	7008WTAL11E-C	99	94.2	12	MXTWP2	$120,981
800	3600	2300/4000	5011/12USS	ANTI-FRICTION	5000	8003WTAK11F-A	182/105	94.1	4	MXTWP2	$80,606
800	3600	2300/4000	5011/12USS	ANTI-FRICTION	5000	8003WTAK11F-C	178/103	94.4	4, 12	MXTWP2	$101,977
800	3600	2300/4000	5011/12USS	SLEEVE	5000	8003WTQK11F-A	180/104	93.8	4, 10	MXTWP2	$98,688
800	3600	2300/4000	5011/12USS	SLEEVE	5000	8003WTQK11F-CF	175/101	94.9	4, 10, 12	MXTWP2	$119,689
800	3600	4000	5809/10/11USS	ANTI-FRICTION	7000	8003WTAL11F-AF	100	94.7	4	MXTWP2	$83,102
800	3600	4000	5809/10/11USS	ANTI-FRICTION	7000	8003WTAL11F-CF	101	95.1	4, 12	MXTWP2	$105,477
800	3600	4000	5809/10/11USS	SLEEVE	7300	8003WTQL11F-AF	100	94.4	4, 10	MXTWP2	$99,687
800	3600	4000	5809/10/11USS	SLEEVE	7300	8003WTQL11F-CF	101	95	4, 10, 12	MXTWP2	$123,472
800	3600	4000	5811/12USS	ANTI-FRICTION	6725	8003WTAL11F-A	102	95.2	4	MXTWP2	$84,641
800	3600	4000	5811/12USS	ANTI-FRICTION	7300	8003WTAL11F-C	99	94.5	4, 12	MXTWP2	$108,049
800	3600	4000	5811/12USS	SLEEVE	7500	8003WTQL11F-A	102	95	4, 10	MXTWP2	$102,960
800	3600	4000	5811/12USS	SLEEVE	7500	8003WTQL11F-C	99	95.5	4, 10, 12	MXTWP2	$126,367
800	1800	2300/4000	5011/12US	ANTI-FRICTION	5000	8004WTAK11E-A	185/107	93.5	3	MXTWP2	$82,511

Open Enclosure

Weather Protected II (WPII) High Efficiency

HP	Speed (RPM)	Volts	Frame	Bearing	Weight (lbs.)	Model Number	FL Amps	Nominal FL EFF	Notes	Discount Symbol	List Price
800	1800	4000	5811/12US	ANTI-FRICTION	7300	8005WTAL11E-A	108	94.5	4	MXTWP2	$88,517
800	1800	4000	5811/12US	ANTI-FRICTION	7300	8005WTAL11E-C	108	95	4, 12	MXTWP2	$111,924
800	1800	4000	5811/12US	SLEEVE	7500	8005WTQL11E-A	103	93.9	4, 10	MXTWP2	$106,835
800	1800	4000	5811/12US	SLEEVE	7500	8005WTQL11E-C	103	93.9	4, 10, 12	MXTWP2	$130,243
800	1200	4000	5811/12US	ANTI-FRICTION	7550	8006WTAL11E-A	115	94.6		MXTWP2	$98,816
800	1200	4000	5811/12US	ANTI-FRICTION	7300	8006WTAL11E-C	108	94.6	12	MXTWP2	$122,222
800	900	4000	6810/11/12US	ANTI-FRICTION	14500	8008WTAL11E-C	108	94.6	12	MXTWP2	$193,838
800	900	4000	6810/11/12US	SLEEVE	15000	8008WTQL11E-C	108	94.7	10, 12	MXTWP2	$209,089
900	3600	2300/4000	5011/12USS	ANTI-FRICTION	5000	9003WTAK11F-A1	CF	CF	4	MXTWP2	$83,932
900	3600	2300/4000	5011/12USS	ANTI-FRICTION	5000	9003WTAK11F-C	CF	CF	4, 12	MXTWP2	$105,303
900	3600	2300/4000	5011/12USS	SLEEVE	5000	9003WTQK11F-A1	CF	CF	4, 10	MXTWP2	$124,470
900	3600	2300/4000	5011/12USS	SLEEVE	5000	9003WTQK11F-CF	193/113	95	4, 10, 12	MXTWP2	$124,470
900	3600	4000	5809/10/11USS	ANTI-FRICTION	7000	9003WTAL11F-AF	113	95.4	4	MXTWP2	$85,374
900	3600	4000	5809/10/11USS	ANTI-FRICTION	7000	9003WTAL11F-CF	112	95.2	4, 12	MXTWP2	$107,442
900	3600	4000	5809/10/11USS	SLEEVE	7300	9003WTQL11F-AF	113	95.4	4, 10	MXTWP2	$103,414
900	3600	4000	5809/10/11USS	SLEEVE	7300	9003WTQL11F-CF	112	96.3	4, 10, 12	MXTWP2	$125,335
900	3600	4000	5811/12USS	ANTI-FRICTION	6941	9003WTAL11F-A	114	95.4	4	MXTWP2	$91,036
900	3600	4000	5811/12USS	ANTI-FRICTION	7300	9003WTAL11F-C	110	96.3	4, 12	MXTWP2	$114,442
900	3600	4000	5811/12USS	SLEEVE	7500	9003WTQL11F-A	114	95.3	4, 10	MXTWP2	$110,424
900	3600	4000	5811/12USS	SLEEVE	7500	9003WTQL11F-C	110	95.7	4, 10, 12	MXTWP2	$132,760
900	1800	4000	5811/12US	ANTI-FRICTION	7300	9005WTAL11E-A	114	94.5	4	MXTWP2	$93,698
900	1800	4000	5811/12US	ANTI-FRICTION	7800	9005WTAL11E-C	117	95	4, 12	MXTWP2	$117,105
900	1800	4000	5811/12US	SLEEVE	8000	9005WTQL11E-A	114	95.5	4, 10	MXTWP2	$112,016
900	1800	4000	5811/12US	SLEEVE	8000	9005WTQL11E-C	117	95.5	4, 10, 12	MXTWP2	$135,423
900	1200	4000	5811/12US	ANTI-FRICTION	6865	9006WTAL11E-A	124	95.4		MXTWP2	$101,219
900	1200	4000	5811/12US	ANTI-FRICTION	7300	9006WTAL11E-C	125	94.5	12	MXTWP2	$124,626
900	900	4000	6810/11/12US	ANTI-FRICTION	14500	9008WTAL11E-C	121	95.4	12	MXTWP2	$202,725
900	900	4000	6810/11/12US	SLEEVE	15000	9008WTQL11E-C	121	95.2	10, 12	MXTWP2	$217,976
1000	3600	2300/4000	5011/12USS	ANTI-FRICTION	5000	M203WTAK11F-A1	CF	CF	4	MXTWP2	$87,258
1000	3600	2300/4000	5011/12USS	ANTI-FRICTION	5000	M203WTAK11F-C	CF	CF	4, 12	MXTWP2	$108,629
1000	3600	2300/4000	5011/12USS	SLEEVE	5000	M203WTQK11F-CF	222/128	94.7	4, 10, 12	MXTWP2	$128,712
1000	3600	4000	5809/10/11USS	ANTI-FRICTION	7000	M203WTAL11F-AF	123	95.2	4	MXTWP2	$88,112
1000	3600	4000	5809/10/11USS	ANTI-FRICTION	7000	M203WTAL11F-CF	125	95.4	4, 12	MXTWP2	$109,355
1000	3600	4000	5809/10/11USS	SLEEVE	7300	M203WTQL11F-AF	124	95.2	4, 10	MXTWP2	$105,450
1000	3600	4000	5809/10/11USS	SLEEVE	7300	M203WTQL11F-CF	125	95	4, 10, 12	MXTWP2	$128,319
1000	3600	4000	5811/12USS	ANTI-FRICTION	7091	M203WTAL11F-A	126	95	4	MXTWP2	$96,083
1000	3600	4000	5811/12USS	ANTI-FRICTION	7300	M203WTAL11F-C	122	95.5	4, 12	MXTWP2	$119,490
1000	3600	4000	5811/12USS	SLEEVE	7500	M203WTQL11F-A	126	95.1	4, 10	MXTWP2	$114,401
1000	3600	4000	5811/12USS	SLEEVE	7801	M203WTQL11F-C	122	95.5	4, 10, 12	MXTWP2	$137,809
1000	1800	4000	5811/12US	ANTI-FRICTION	6870	M205WTAL11E-A	126	95.1	4	MXTWP2	$97,635
1000	1800	4000	5811/12US	ANTI-FRICTION	7300	M205WTAL11E-C	131	95.7	4, 12	MXTWP2	$121,043
1000	1800	4000	5811/12US	SLEEVE	8000	M205WTQL11E-A	126	95	4, 10	MXTWP2	$115,954
1000	1800	4000	5811/12US	SLEEVE	8000	M205WTQL11E-C	131	95.4	4, 10, 12	MXTWP2	$139,361
1000	1200	4000	5811/12US	ANTI-FRICTION	7300	M206WTAL11E-A	135	95	3, 14	MXTWP2	$104,047
1000	1200	4000	5811/12US	ANTI-FRICTION	7300	M206WTAL11E-C	137	94.7	3, 12, 14	MXTWP2	$127,453
1000	900	4000	6812/13US	ANTI-FRICTION	15500	M208WTAL11E-C	134	95	12	MXTWP2	$212,716
1000	900	4000	6812/13US	SLEEVE	14000	M208WTQL11E-C	134	95.6	10, 12	MXTWP2	$227,967
1250	3600	4000	5809/10/11USS	ANTI-FRICTION	7000	M253WTAL11F-AF	155	95.5	4	MXTWP2	$97,360

Open Enclosure

Weather Protected II (WPII)
High Efficiency

HP	Speed (RPM)	Volts	Frame	Bearing	Weight (lbs.)	Model Number	FL Amps	Nominal FL EFF	Notes	Discount Symbol	List Price
1250	3600	4000	5809/10/11USS	ANTI-FRICTION	7000	M253WTAL11F-CF	156	95.4	4, 12	MXTWP2	$115,887
1250	3600	4000	5809/10/11USS	SLEEVE	7300	M253WTQL11F-AF	155	95.4	4, 10	MXTWP2	$116,740
1250	3600	4000	5809/10/11USS	SLEEVE	7300	M253WTQL11F-CF	156	94.5	4, 10, 12	MXTWP2	$136,709
1250	3600	4000	5811/12USS	ANTI-FRICTION	7288	M253WTAL11F-A	158	94.9	4	MXTWP2	$100,308
1250	3600	4000	5811/12USS	ANTI-FRICTION	7400	M253WTAL11F-C	153	95.2	4, 12	MXTWP2	$123,716
1250	3600	4000	5811/12USS	SLEEVE	7000	M253WTQL11F-A	158	95.2	4, 10	MXTWP2	$118,627
1250	3600	4000	5811/12USS	SLEEVE	7906	M253WTQL11F-C	153	95.7	4, 10, 12	MXTWP2	$142,034
1250	1800	4000	5811/12US	ANTI-FRICTION	8100	M255WTAL11E-A	157	95.8	4	MXTWP2	$104,434
1250	1800	4000	5811/12US	ANTI-FRICTION	7800	M255WTAL11E-C	162	95.7	4, 12	MXTWP2	$127,840
1250	1800	4000	5811/12US	SLEEVE	8100	M255WTQL11E-A	157	96.1	4, 10	MXTWP2	$122,753
1250	1800	4000	5811/12US	SLEEVE	8100	M255WTQL11E-C	162	95.4	4, 10, 12	MXTWP2	$146,159
1250	1200	4000	6810/11/12US	ANTI-FRICTION	14500	M257WTAL11E-C	157	95.4	4, 12	MXTWP2	$219,586
1250	1200	4000	6810/11/12US	SLEEVE	14000	M257WTQL11E-C	157	95.4	4, 10, 12	MXTWP2	$234,837
1250	900	4000	6812/13US	ANTI-FRICTION	15500	M258WTAL11E-C	169	95.4	12	MXTWP2	$225,158
1250	900	4000	6812/13US	SLEEVE	14000	M258WTQL11E-C	169	95.4	10, 12	MXTWP2	$240,409
1500	3600	4000	5809/10/11USS	ANTI-FRICTION	7000	M303WTAL11F-CF	187	95.7	4, 12	MXTWP2	$126,475
1500	3600	4000	5809/10/11USS	SLEEVE	7300	M303WTQL11F-CF	187	95.8	4, 10, 12	MXTWP2	$142,366
1500	3600	4000	5811/12USS	ANTI-FRICTION	7434	M303WTAL11F-A	189	97	4	MXTWP2	$105,349
1500	3600	4000	5811/12USS	ANTI-FRICTION	7500	M303WTAL11F-C	183	94.5	4, 12	MXTWP2	$128,756
1500	3600	4000	5811/12USS	SLEEVE	7500	M303WTQL11F-A	189	95	4, 10	MXTWP2	$123,667
1500	3600	4000	5811/12USS	SLEEVE	8044	M303WTQL11F-C	183	95.3	4, 10, 12	MXTWP2	$147,075
1500	1800	4000	5811/12US	ANTI-FRICTION	8100	M305WTAL11E-A	189	95.3	3, 4, 14	MXTWP2	$108,057
1500	1800	4000	5811/12US	ANTI-FRICTION	7900	M305WTAL11E-C	193	95.8	3, 4, 12, 14	MXTWP2	$131,464
1500	1800	4000	5811/12US	SLEEVE	8100	M305WTQL11E-A	189	96.2	3, 4, 10, 14	MXTWP2	$126,376
1500	1800	4000	5811/12US	SLEEVE	8100	M305WTQL11E-C	193	95.4	3, 4, 10, 12, 14	MXTWP2	$149,783
1500	1800	4000	6810/11/12US	ANTI-FRICTION	14500	M305WTAL11E-CF	196	96.2	4, 12	MXTWP2	$223,612
1500	1800	4000	6810/11/12US	SLEEVE	15000	M305WTQL11E-CF	196	95.4	4, 10, 12	MXTWP2	$239,280
1500	1200	4000	6810/11/12US	ANTI-FRICTION	14500	M307WTAL11E-C	187	95.4	4, 12	MXTWP2	$225,900
1500	1200	4000	6810/11/12US	SLEEVE	14000	M307WTQL11E-C	187	96.8	4, 10, 12	MXTWP2	$241,151
1500	900	4000	6812/13US	ANTI-FRICTION	15500	M308WTAL11E-C	205	95.8	12	MXTWP2	$235,592
1500	900	4000	6812/13US	SLEEVE	14000	M308WTQL11E-C	205	95	10, 12	MXTWP2	$250,843
1750	3600	4000	5811/12USS	ANTI-FRICTION	7300	M353WTAL11F-A	224	96.8	4	MXTWP2	$109,216
1750	3600	4000	5811/12USS	ANTI-FRICTION	7300	M353WTAL11F-C	216	95.8	4, 12	MXTWP2	$132,622
1750	3600	4000	5811/12USS	SLEEVE	7500	M353WTQL11F-A	224	95	4, 10	MXTWP2	$127,534
1750	3600	4000	5811/12USS	SLEEVE	8237	M353WTQL11F-C	216	95.2	4, 10, 12	MXTWP2	$150,941
1750	1800	4000	6810/11/12US	ANTI-FRICTION	14500	M355WTAL11E-C	219	95.2	4, 12	MXTWP2	$225,807
1750	1800	4000	6810/11/12US	SLEEVE	15000	M355WTQL11E-C	219	95.5	4, 10, 12	MXTWP2	$241,058
1750	1200	4000	6810/11/12US	ANTI-FRICTION	14500	M357WTAL11E-C	218	95.5	4, 12	MXTWP2	$234,543
1750	1200	4000	6810/11/12US	SLEEVE	14000	M357WTQL11E-C	218	95.6	4, 10, 12	MXTWP2	$249,795
1750	900	4000	R1083	ANTI-FRICTION	17000	J1758NLF3I-M	239	95.9	11, 12	MXTWP2	$248,427
1750	900	4000	R1083	SLEEVE	17000	J1758NLFLI-M	240	95.7	11, 12	MXTWP2	$270,306
2000	3600	4000	5811/12USS	SLEEVE	8551	M403WTQL11F-C	245	96	4, 10, 12	MXTWP2	$157,329
2000	3600	4000	6810/11/12US	SLEEVE	15000	M403WTQL11F-CF	249	96.1	4, 10, 12	MXTWP2	$252,997
2000	1800	4000	6810/11/12US	ANTI-FRICTION	14500	M405WTAL11E-C	250	96.1	4, 12	MXTWP2	$232,607
2000	1800	4000	6810/11/12US	SLEEVE	15000	M405WTQL11E-C	250	95.6	4, 10, 12	MXTWP2	$247,858
2000	1200	4000	6810/11/12US	ANTI-FRICTION	14500	M407WTAL11E-C	250	95.6	4, 12	MXTWP2	$245,768
2000	1200	4000	6810/11/12US	SLEEVE	14000	M407WTQL11E-C	250	94.3	4, 10, 12	MXTWP2	$261,020
2000	900	4000	R1083	ANTI-FRICTION	17000	J2008NLF3I-M	271	96.2	11, 12	MXTWP2	$261,762

Open Enclosure

Weather Protected II (WPII) High Efficiency

HP	Speed (RPM)	Volts	Frame	Bearing	Weight (lbs.)	Model Number	FL Amps	Nominal FL EFF	Notes	Discount Symbol	List Price
2000	900	4000	R1083	SLEEVE	17000	J2008NLFLI-M	271	96	11, 12	MXTWP2	$283,641
2250	3600	4000	6810/11/12US	SLEEVE	15000	M453WTQL11F-C	279	96.3	4, 10, 12	MXTWP2	$273,351
2250	1800	4000	6810/11/12US	ANTI-FRICTION	14500	M455WTAL11E-C	278	96.3	4, 12	MXTWP2	$245,246
2250	1800	4000	6810/11/12US	SLEEVE	15000	M455WTQL11E-C	278	96.3	4, 10, 12	MXTWP2	$260,497
2250	1200	4000	6812/13US	ANTI-FRICTION	15500	M457WTAL11E-C	281	95.5	4, 12	MXTWP2	$257,170
2250	1200	4000	6812/13US	SLEEVE	14000	M457WTQL11E-C	281	95.5	4, 10, 12	MXTWP2	$272,422
2250	900	4000	R1083	ANTI-FRICTION	17000	J2258NLF3I-M	303	96.4	11, 12	MXTWP2	$267,836
2250	900	4000	R1083	SLEEVE	17000	J2258NLFLI-M	304	96.2	11, 12	MXTWP2	$289,715
2500	3600	4000	6810/11/12US	SLEEVE	15000	M503WTQL11F-C	309	95.8	4, 10, 12	MXTWP2	$286,998
2500	1800	4000	6810/11/12US	ANTI-FRICTION	14500	M505WTAL11E-C	309	96.4	4, 12	MXTWP2	$254,824
2500	1800	4000	6810/11/12US	SLEEVE	15000	M505WTQL11E-C	309	96.4	4, 10, 12	MXTWP2	$270,075
2500	1200	4000	6812/13US	ANTI-FRICTION	15500	M507WTAL11E-C	318	95.4	4, 12	MXTWP2	$269,160
2500	1200	4000	6812/13US	SLEEVE	14000	M507WTQL11E-C	318	95.4	4, 10, 12	MXTWP2	$284,411
2500	900	4000	R1085	ANTI-FRICTION	17000	J2508NLF3I-M	335	96.5	11, 12	MXTWP2	$273,733
2500	900	4000	R1085	SLEEVE	17000	J2508NLFLI-M	336	96.3	11, 12	MXTWP2	$295,612
2750	3600	4000	6810/11/12USS	SLEEVE	14500	M553WTQL11F-C	337	95.7	4, 10, 12	MXTWP2	$302,578
2750	1800	4000	6812/13US	ANTI-FRICTION	15500	M555WTAL11E-C	338	96.3	4, 12	MXTWP2	$267,522
2750	1800	4000	6812/13US	SLEEVE	15000	M555WTQL11E-C	338	96.3	4, 10, 12	MXTWP2	$282,773
2750	1200	4000	6812/13US	ANTI-FRICTION	15500	M557WTAL11E-C	368	95.9	3, 4, 12, 14	MXTWP2	$280,356
2750	1200	4000	6812/13US	SLEEVE	15000	M557WTQL11E-C	368	95.9	3, 4, 10, 12, 14	MXTWP2	$295,607
2750	900	4000	R1087	ANTI-FRICTION	17000	J2758NLF3I-M	377	95.8	11, 12	MXTWP2	$287,300
2750	900	4000	R1087	SLEEVE	17000	J2758NLFLI-M	377	95.8	11, 12	MXTWP2	$309,179
3000	3600	4000	6810/11/12US	SLEEVE	15000	M603WTQL11F-C	370	96.3	4, 10, 12	MXTWP2	$315,659
3000	1800	4000	6812/13US	ANTI-FRICTION	15500	M605WTAL11E-C	369	96.7	4, 12	MXTWP2	$280,561
3000	1800	4000	6812/13US	SLEEVE	14000	M605WTQL11E-C	369	96.7	4, 10, 12	MXTWP2	$295,812
3000	900	4000	R1087	ANTI-FRICTION	17000	J3008NLF3I-M	416	95.6	11, 12	MXTWP2	$302,819
3000	900	4000	R1087	SLEEVE	17000	J3008NLFLI-M	416	95.6	11, 12	MXTWP2	$324,698
3500	3600	4000	6810/11/12US	SLEEVE	15000	M703WTQL11F-C	431	96.2	4, 10, 12	MXTWP2	$328,859
3500	1800	4000	6812/13US	ANTI-FRICTION	15500	M705WTAL11E-C	431	96.6	4, 12	MXTWP2	$292,293
3500	1800	4000	6812/13US	SLEEVE	14000	M705WTQL11E-C	431	96.1	4, 10, 12	MXTWP2	$307,545
3500	1200	4000	R1085	ANTI-FRICTION	17000	J3507NLF3I-M	458	95.9	4, 11, 12	MXTWP2	$311,777
3500	1200	4000	R1085	SLEEVE	17000	J3507NLFLI-M	458	95.9	4, 11, 12	MXTWP2	$333,656
3500	900	4000	R1087	ANTI-FRICTION	17000	J3508NLF3I-M	482	95.7	11, 12	MXTWP2	$339,219
3500	900	4000	R1087	SLEEVE	17000	J3508NLFLI-M	482	95.7	11, 12	MXTWP2	$361,098
4000	3600	4000	6812/13USS	SLEEVE	14000	M803WTQL11F-C	495	96.2	4, 10, 12	MXTWP2	$336,680
4000	1800	4000	450-1600	ANTI-FRICTION	15500	M805WTAL11E-CF	509	96.7	4, 12	MXTWP2	$324,120
4000	1800	4000	450-1600	SLEEVE	14000	M805WTQL11E-C	495	96.6	4, 10, 12	MXTWP2	$338,621
4000	1800	4000	6812/13US	ANTI-FRICTION	15500	M805WTAL11E-C	495	96.6	3, 4, 12, 14	MXTWP2	$306,281
4000	1800	4000	6812/13US	SLEEVE	16000	M805WTQL11E-CF	509	96.7	3, 4, 10, 12, 14	MXTWP2	$321,532
4000	1200	4000	R1087	ANTI-FRICTION	17000	J4007NLF3I-M	522	95.9	4, 11, 12	MXTWP2	$343,288
4000	1200	4000	R1087	SLEEVE	17000	J4007NLFLI-M	522	95.9	4, 11, 12	MXTWP2	$365,167
4000	900	4000	R1089	ANTI-FRICTION	17000	J4008NLF3I-M	547	95.8	11, 12	MXTWP2	$353,511
4000	900	4000	R1089	SLEEVE	17000	J4008NLFLI-M	547	95.8	11, 12	MXTWP2	$375,390
4500	3600	4000	6812/13USS	SLEEVE	14000	M903WTQL11F-C	553	97.1	4, 10, 12	MXTWP2	$348,644
4500	1800	4000	1087	ANTI-FRICTION	17000	J4507NLF3I-M	585	96.1	4, 11, 12	MXTWP2	$383,301
4500	1800	4000	450-1600	ANTI-FRICTION	15500	M905WTAL11E-C	575	97.1	4, 12	MXTWP2	$328,225
4500	1800	4000	450-1600	SLEEVE	16000	M905WTQL11E-C	575	97.1	4, 10, 12	MXTWP2	$343,186
4500	1800	4000	R1085	ANTI-FRICTION	17000	J4505NLF3I-M	575	96.8	4, 11, 12	MXTWP2	$332,940

Open Enclosure

Weather Protected II (WPII)
High Efficiency

HP	Speed (RPM)	Volts	Frame	Bearing	Weight (lbs.)	Model Number	FL Amps	Nominal FL EFF	Notes	Discount Symbol	List Price
4500	1800	4000	R1085	SLEEVE	17000	J4505NLFLI-M	585	96.1	4, 11, 12	MXTWP2	$361,422
4500	1200	4000	1087	SLEEVE	17000	J4507NLFLI-M	585	96.1	4, 11, 12	MXTWP2	$351,476
4500	900	4000	1089	ANTI-FRICTION	17000	J4508NLF3I-M	613	96	11, 12	MXTWP2	$386,278
4500	900	4000	1089	SLEEVE	17000	J4508NLFLI-M	613	96	11, 12	MXTWP2	$408,157
5000	3600	4000	450-1600	SLEEVE	16000	C203WTQL11E-C	603	97	4, 10, 12	MXTWP2	$355,860
5000	1800	4000	1087	ANTI-FRICTION	17000	J5005NLF3I-M	624	96.3	4, 11, 12	MXTWP2	$345,249
5000	1800	4000	1087	SLEEVE	17000	J5005NLFLI-M	624	96.3	4, 11, 12	MXTWP2	$361,059
5000	1200	4000	1089	ANTI-FRICTION	17000	J5007NLF3I-M	649	96	4, 11, 12	MXTWP2	$369,752
5000	1200	4000	1089	SLEEVE	17000	J5007NLFLI-M	649	96	4, 11, 12	MXTWP2	$391,631
5000	900	4000	1425	ANTI-FRICTION	18000	J5008NLF3I-M	676	96.2	11, 12	MXTWP2	$397,434
5000	900	4000	1425	SLEEVE	18000	J5008NLFLI-M	676	96.2	11, 12	MXTWP2	$419,313
6000	1800	4000	1087	ANTI-FRICTION	17000	J6005NLF3I-M	748	96.3	4, 11, 12	MXTWP2	$352,691
6000	1800	4000	1087	SLEEVE	17000	J6005NLFLI-M	748	96.3	4, 11, 12	MXTWP2	$368,501
6000	1200	4000	1089	ANTI-FRICTION	17000	J6007NLF3I-M	778	96.3	4, 11, 12	MXTWP2	$391,909
6000	1200	4000	1089	SLEEVE	17000	J6007NLFLI-M	778	96.3	4, 11, 12	MXTWP2	$413,788
6000	900	4000	1425	ANTI-FRICTION	18000	J6008NLF3I-M	810	96.2	11, 12	MXTWP2	$414,685
6000	900	4000	1425	SLEEVE	18000	J6008NLFLI-M	810	96.2	11, 12	MXTWP2	$436,564
7000	1800	4000	1089	ANTI-FRICTION	17000	J7005NLF3I-M	873	96.5	4, 11, 12	MXTWP2	$359,547
7000	1800	4000	1089	SLEEVE	17000	J7005NLFLI-M	873	96.5	4, 11, 12	MXTWP2	$375,357
7000	1200	4000	1425	ANTI-FRICTION	18000	J7007NLF3I-M	904	96.4	4, 11, 12	MXTWP2	$320,776
7000	1200	4000	1425	SLEEVE	18000	J7007NLFLI-M	904	96.4	4, 11, 12	MXTWP2	$342,655
7000	900	4000	1427	ANTI-FRICTION	18000	J7008NLF3I-M	923	96.7	11, 12	MXTWP2	$427,062
7000	900	4000	1427	SLEEVE	18000	J7008NLFLI-M	923	96.7	11, 12	MXTWP2	$448,941
8000	1800	4000	1089	ANTI-FRICTION	17000	J8005NLF3I-M	995	96.5	4, 11, 12	MXTWP2	$366,143
8000	1800	4000	1089	SLEEVE	17000	J8005NLFLI-M	995	96.5	4, 11, 12	MXTWP2	$381,953
8000	1200	4000	1425	ANTI-FRICTION	18000	J8007NLF3I-M	1028	96	4, 11, 12	MXTWP2	$333,007
8000	1200	4000	1425	SLEEVE	18000	J8007NLFLI-M	1028	96	4, 11, 12	MXTWP2	$354,886
8000	900	4000	1429	ANTI-FRICTION	18000	J8008NLF3I-M	1054	96.7	11, 12	MXTWP2	$441,090
8000	900	4000	1429	SLEEVE	18000	J8008NLFLI-M	1054	96.7	11, 12	MXTWP2	$462,969
9000	1800	4000	1425	ANTI-FRICTION	18000	J9005NLF3I-M	1121	96.7	4, 11, 12	MXTWP2	$372,036
9000	1800	4000	1425	SLEEVE	18000	J9005NLFLI-M	1121	96.7	4, 11, 12	MXTWP2	$387,846
9000	1200	4000	1427	ANTI-FRICTION	18000	J9007NLF3I-M	1141	96.8	4, 11, 12	MXTWP2	$354,252
9000	1200	4000	1427	SLEEVE	18000	J9007NLFLI-M	1141	96.8	4, 11, 12	MXTWP2	$376,131
9000	900	4000	1429	ANTI-FRICTION	18000	J9008NLF3I-M	1177	96.8	11, 12	MXTWP2	$458,624
9000	900	4000	1429	SLEEVE	18000	J9008NLFLI-M	1177	96.8	11, 12	MXTWP2	$480,503
10000	1800	4000	1427	ANTI-FRICTION	18000	K1005NLF3I-M	1243	96.7	4, 11, 12	MXTWP2	$386,687
10000	1800	4000	1427	SLEEVE	18000	K1005NLFLI-M	1243	96.7	4, 11, 12	MXTWP2	$402,497
10000	1200	4000	1427	ANTI-FRICTION	18000	K1007NLF3I-M	CF	CF	4, 11, 12	MXTWP2	$376,145
10000	1200	4000	1427	SLEEVE	18000	K1007NLFLI-M	CF	CF	4, 11, 12	MXTWP2	$398,024
11000	1800	4000	1427	ANTI-FRICTION	18000	K1105NLF3I-M	CF	CF	4, 11, 12	MXTWP2	$401,423
11000	1800	4000	1427	SLEEVE	18000	K1105NLFLI-M	CF	CF	4, 11, 12	MXTWP2	$417,233
11000	1200	4000	1429	ANTI-FRICTION	18000	K1107NLF3I-M	CF	CF	4, 11, 12	MXTWP2	$393,197
11000	1200	4000	1429	SLEEVE	18000	K1107NLFLI-M	CF	CF	4, 11, 12	MXTWP2	$415,076

FL Amps and FL EFF are average expected design values and not guaranteed.
The weights listed above are estimated.
Please contact Toshiba for information on product availability.
"CF" = Consult Factory

Medium Voltage General Purpose Series

Totally Enclosed Motors

Toshiba's general purpose, medium voltage totally enclosed motor series includes our totally enclosed fan cooled (TEFC), totally enclosed water-air cooled (TEWAC) and totally enclosed air-to-air cooled (TEAAC) motors. Designed to meet the industry's ever-increasing need for improved energy conservation and product reliability, these motors offer some of the highest efficiency and torque ratings while producing some of the lowest vibration ratings in the industry—leading to a longer life and greater reliability. This motor series can be used on indoor and outdoor applications.

The general purpose, medium voltage totally enclosed motor is available in a high efficiency design with a die cast aluminum or copper bar rotor and anti-friction ball bearings or self-cooled sleeve bearings. These motor offerings are completely customizable due to our in-house design, engineering, and manufacturing capabilities. This allows us to not only meet but exceed specific application requirements.

Standard Features:

- Totally Enclosed Fan Cooled, Air-to-Air Cooled, and Totally Enclosed Water-to-Air Cooled
- High Efficiency
- 60 Hz: 2300/4000 or 4000 V*
- Three-Phase
- Horizontal Foot-Mounted Direct-Coupled or Belted Applications (Where Noted)
- Class F Form-Wound Insulation
- Class B Temperature Rise at 1.0 Service Factor by Resistance (Where Noted)
- IP44, IP54, or IP55 Protection
- Vacuum-Pressure Impregnated System
- Cast Iron Frame & End Brackets
- Cast Iron Terminal Box & Fabricated Steel Box
- Anti-Friction Ball or Sleeve Bearings
- Aluminum Die Cast or Copper Bar Rotor
- Polyurea Base Grease or ISO VG Oil
- 304 Stainless Steel Nameplate

*Contact Toshiba for 6000, 6600, or 13,200 V options.

Applications:

- Pumps
- Fans
- Compressors
- Conveyors
- Mixers
- Material
- General Applications

Warranty:

- From Date of Manufacture: 18 Months**
- From Date of Installation: 12 Months**

**Whichever Comes First

Totally Enclosed

Totally Enclosed Fan Cooled (TEFC)

High & NEMA Premium® Efficiency

Toshiba's general purpose, medium voltage totally enclosed fan cooled motor offering is designed to meet the industry's ever-increasing need for improved energy conservation and product performance. This product line offers exceptionally high torque and a low vibration design, leading to a longer life and greater reliability. These motors are completely customizable due to our in-house design, engineering, and manufacturing capabilities, allowing us to not only meet but exceed specific application requirements.

Product Scope:

Horsepower:	100 to 2500 HP
Speed:	3600, 1800, 1200, 900 or 720 RPM*
Voltage:	2300/4000 or 4000 V*
Enclosure:	Totally Enclosed Fan Cooled
Frame Size:	449T through N8810
Construction:	Cast Iron Frame & End Brackets
Insulation:	Class F with Class B Rise at 1.0 Service Factor by RM (Where Noted)
Environment:	Suitable for Indoor or Outdoor

*Contact Toshiba for 6000, 6600, or 13,200 V Options

General Features:

- Winding RTDs (100 Ohm Platinum, Two per Phase) for S/B449, Tri-Mount 5011, 5811, 6811 and N6810 through N8810 Frames
  – Wired to an Auxiliary Box
- Space Heater (120 V, I, 60) for Tri-Mount 5011, 5811, 6811 and N6810 through N8810 Frames
  – Wired to an Auxiliary Box
- Bearing RTDs/Vibration Provisions
- Bearing RTDs for N6810 through N8810 Frames
- Insulated NDE Ball Bearing for 509 through N8810 Frames
- Insulated NDE Ball Bearing IP54 for Tri-Mount 5011, 5811, and 6811 Frames
- Insulated Sleeve Bearings on Both Ends; IP55 for Tri-Mount 5011, 5811, and 6811 Frames
- Cast Iron Main Terminal Box for 449 and Tri-Mount 5011, 5811 Frames; Fabricated Steel Box for 509 through N8810 Frames; Type II Fabricated Steel Box for Tri-Mount 6811 Frames
- Cast Iron Fan Cover for S/B449 and Tri-Mount 5011, 5811 Frames; Fabricated Steel Box for N/L449, S/B449 (2-Pole; 300 HP, 8-Pole), Tri-Mount 5011, 5811 (Sleeve Bearing), Tri-Mount 6811 and 509 through N8810 Frames

Additional Frame Options and Features Available;
See Catalog Production Modifications Section

HP	Speed (RPM)	Volts	Frame	Bearing	Weight (lbs.)	Model Number	FL Amps	Nominal FL EFF	Notes	DuraBull	Discount Symbol	List Price
100	3600	2300/4000	S449TS	ANTI-FRICTION	CF	1003SDAK41B-A	22.1/12.7	93	4		MXTFCM	$49,451
100	1800	2300/4000	S449T	ANTI-FRICTION	CF	1004SDAK41A-A	25.6/14.7	94.1			MXTFCM	$48,688
100	1200	2300/4000	S449T	ANTI-FRICTION	CF	1006SDAK41A-A	CF	CF			MXTFCM	$57,977
125	3600	2300/4000	S449TS	ANTI-FRICTION	CF	1253SDAK41B-A	27.5/15.8	93.6	4		MXTFCM	$50,212
125	1800	2300/4000	S449T	ANTI-FRICTION	CF	1254SDAK41A-A	31.7/18.2	94.1			MXTFCM	$49,451
125	1200	2300/4000	S449T	ANTI-FRICTION	CF	1256SDAK41A-A	CF	CF			MXTFCM	$58,727
125	900	2300/4000	S449T	ANTI-FRICTION	CF	1258SDAK41A-A	35/20	94.5			MXTFCM	$61,306
150	3600	2300/4000	S449TS	ANTI-FRICTION	CF	1503SDAK41B-A	32.9/18.9	94.5	4		MXTFCM	$51,323
150	1800	2300/4000	S449T	ANTI-FRICTION	CF	1504SDAK41A-A	38/22	94.5			MXTFCM	$50,811
150	1200	2300/4000	S449T	ANTI-FRICTION	CF	1506SDAK41A-A	35/20	94.5			MXTFCM	$59,840
150	900	2300/4000	S449T	ANTI-FRICTION	CF	1508SDAK41A-A	42/24	94.5			MXTFCM	$61,956
200	3600	2300/4000	S449TS	ANTI-FRICTION	CF	2003SDAK41B-A	44/25	95	4		MXTFCM	$54,490

Totally Enclosed

Totally Enclosed Fan Cooled (TEFC) High & NEMA Premium® Efficiency

HP	Speed (RPM)	Volts	Frame	Bearing	Weight (lbs.)	Model Number	FL Amps	Nominal FL EFF	Notes	DuraBull	Discount Symbol	List Price
200	1800	2300/4000	S449T	ANTI-FRICTION	CF	2004SDAK41A-A	51/29	95			MXTFCM	$52,368
200	1200	2300/4000	S449T	ANTI-FRICTION	CF	2006SDAK41A-A	47/27	95			MXTFCM	$61,513
200	900	2300/4000	B449T	ANTI-FRICTION	4000	2008SDAK41A-A	55/32	95			MXTFCM	$64,093
200	900	4000	509E	ANTI-FRICTION	4000	2008FCAL11E-CF	31.7	94.1	11, 12		MXTFCM	$74,350
200	900	4000	5009/10/11US	ANTI-FRICTION	6000	2008FTAL11E-A	31	93.6		✓	MXTFCM	$62,273
200	900	4000	5009/10/11US	ANTI-FRICTION	6000	2008FTAL11E-C	31	93.6	12	✓	MXTFCM	$83,723
200	720	4000	D509E	ANTI-FRICTION	4000	F2009FLF3I-C	32.1	92.6	11, 12		MXTFCM	$78,408
250	3600	2300/4000	S449TS	ANTI-FRICTION	CF	2503SDAK41B-A	56/32	95	4		MXTFCM	$55,950
250	1800	2300/4000	S449T	ANTI-FRICTION	CF	2504SDAK41A-A	63/37	95			MXTFCM	$54,152
250	1200	2300/4000	S449T	ANTI-FRICTION	CF	2506SDAK41A-A	60/35	95			MXTFCM	$63,155
250	1200	4000	5009/10/11US	ANTI-FRICTION	5000	2506FTAL11E-A	36	94.5		✓	MXTFCM	$61,438
250	1200	4000	5009/10/11US	ANTI-FRICTION	5000	2506FTAL11E-C	36	94.5	12	✓	MXTFCM	$82,888
250	900	2300/4000	B449T	ANTI-FRICTION	CF	2508SDAK41A-A	73/42	95			MXTFCM	$66,229
250	900	4000	D509E	ANTI-FRICTION	4000	2508FCAL11E-CF	38.6	94.5	11, 12		MXTFCM	$76,514
250	900	4000	5009/10/11US	ANTI-FRICTION	6100	2508FTAL11E-A	38	93.6		✓	MXTFCM	$62,852
250	900	4000	5009/10/11US	ANTI-FRICTION	6100	2508FTAL11E-C	38	93.6	12	✓	MXTFCM	$84,302
250	720	4000	D509E	ANTI-FRICTION	4000	F2509FLF3I-C	40	93.3	11, 12		MXTFCM	$79,882
300	3600	2300/4000	B449TS	ANTI-FRICTION	CF	3003SDAK41B-A	67/38	95	4		MXTFCM	$57,384
300	1800	2300/4000	S449T	ANTI-FRICTION	CF	3004SDAK41A-A	77/44	95			MXTFCM	$56,447
300	1800	4000	5009/10/11US	ANTI-FRICTION	4397	3004FTAL11E-A	43	94.5		✓	MXTFCM	$53,708
300	1800	4000	5009/10/11US	ANTI-FRICTION	5000	3004FTAL11E-C	43	94.5	12	✓	MXTFCM	$76,147
300	1800	4000	5009/10/11US	SLEEVE	5000	3004FTQL11E-A	43	94.5	10	✓	MXTFCM	$70,893
300	1800	4000	5009/10/11US	SLEEVE	5000	3004FTQL11E-C	43	94.5	10, 12	✓	MXTFCM	$92,343
300	1200	2300/4000	B449T	ANTI-FRICTION	CF	3006SDAK41A-A	71/41	95			MXTFCM	$64,812
300	1200	4000	509E	ANTI-FRICTION	4000	3006FCAL11E-CF	40.5	94.5	11, 12		MXTFCM	$81,740
300	1200	4000	5009/10/11US	ANTI-FRICTION	4523	3006FTAL11E-A	45	94.5		✓	MXTFCM	$62,309
300	1200	4000	5009/10/11US	ANTI-FRICTION	5000	3006FTAL11E-C	45	94.5	12	✓	MXTFCM	$84,749
300	900	2300/4000	B449T	ANTI-FRICTION	CF	3008SDAK41A-A	48	95	3, 14		MXTFCM	$68,365
300	900	4000	H509E	ANTI-FRICTION	4000	3008FCAL11E-CF	45.3	94.8	11, 12		MXTFCM	$84,280
300	900	4000	5009/10/11US	ANTI-FRICTION	6200	3008FTAL11E-A	46	94.1		✓	MXTFCM	$66,079
300	900	4000	5009/10/11US	ANTI-FRICTION	6200	3008FTAL11E-C	46	94.1	12	✓	MXTFCM	$87,529
300	720	4000	H509E	ANTI-FRICTION	4000	F3009FLF3I-C	47.9	94	11, 12		MXTFCM	$88,340
350	3600	2300/4000	B449TS	ANTI-FRICTION	CF	3503SDAK41B-A	82/47	95	4		MXTFCM	$58,919
350	3600	4000	5009/10/11USS	ANTI-FRICTION	4407	3503FTAL11F-A	46	93.6	4	✓	MXTFCM	$55,393
350	3600	4000	5009/10/11USS	ANTI-FRICTION	5000	3503FTAL11F-C	44	95	4, 12	✓	MXTFCM	$77,832
350	1800	2300/4000	B449T	ANTI-FRICTION	CF	3504SDAK41A-A	89/51	95.4			MXTFCM	$57,607
350	1800	4000	509E	ANTI-FRICTION	4000	3504FCAL11E-CF	44.8	94.1	11, 12		MXTFCM	$72,599
350	1800	4000	5009/10/11US	ANTI-FRICTION	4371	3504FTAL11E-A	50	94.5		✓	MXTFCM	$54,602
350	1800	4000	5009/10/11US	ANTI-FRICTION	5000	3504FTAL11E-C	50	94.5	12	✓	MXTFCM	$77,042
350	1800	4000	5009/10/11US	SLEEVE	5000	3504FTQL11E-A	44	93	10	✓	MXTFCM	$72,141
350	1800	4000	5009/10/11US	SLEEVE	5000	3504FTQL11E-C	44	93.6	10, 12	✓	MXTFCM	$94,581
350	1200	2300/4000	B449T	ANTI-FRICTION	CF	3506SDAK41A-A	83/48	95.4			MXTFCM	$66,469
350	1200	4000	D509E	ANTI-FRICTION	4000	3506FCAL11E-CF	47	94.5	11, 12		MXTFCM	$83,507
350	1200	4000	5009/10/11US	ANTI-FRICTION	4697	3506FTAL11E-A	51	94.1		✓	MXTFCM	$63,172

Totally Enclosed

Totally Enclosed Fan Cooled (TEFC) High & NEMA Premium® Efficiency

HP	Speed (RPM)	Volts	Frame	Bearing	Weight (lbs.)	Model Number	FL Amps	Nominal FL EFF	Notes	DuraBull	Discount Symbol	List Price
350	1200	4000	5009/10/11US	ANTI-FRICTION	5000	3506FTAL11E-C	51	94.5	12	✓	MXTFCM	$85,613
350	900	4000	H509E	ANTI-FRICTION	4000	3508FCAL11E-CF	51.8	94.8	11, 12		MXTFCM	$87,340
350	900	4000	5809/10/11US	ANTI-FRICTION	6700	3508FTAL11E-A	52	94.1		✓	MXTFCM	$77,683
350	900	4000	5809/10/11US	ANTI-FRICTION	6700	3508FTAL11E-C	52	94.1	12	✓	MXTFCM	$99,133
350	720	4000	5810L	ANTI-FRICTION	6500	F3509FLF3I-C	55.7	94.5	11, 12		MXTFCM	$90,240
400	3600	2300/4000	B449TS	ANTI-FRICTION	CF	4003SDAK41B-A	95/55	95	4		MXTFCM	$60,396
400	3600	4000	H509US	ANTI-FRICTION	4000	4003FCAL11F-CF	48.3	95.4	4, 11, 12		MXTFCM	$78,580
400	3600	4000	5009/10/11USS	ANTI-FRICTION	5800	4003FTAL11F-A	52	94.1	4	✓	MXTFCM	$60,628
400	3600	4000	5009/10/11USS	ANTI-FRICTION	5000	4003FTAL11F-C	50	94.1	4, 12	✓	MXTFCM	$83,069
400	3600	4000	5809/10/11USS	SLEEVE	5800	4003FTQL11F-A	52	94.1	4, 10	✓	MXTFCM	$87,887
400	3600	4000	5809/10/11USS	SLEEVE	5000	4003FTQL11F-C	50	94.1	4, 10, 12	✓	MXTFCM	$105,478
400	1800	2300/4000	B449T	ANTI-FRICTION	CF	4004SDAK41A-A	101/58	95.4			MXTFCM	$58,610
400	1800	4000	D509E	ANTI-FRICTION	4000	4004FCAL11E-CF	51.1	94.5	11, 12		MXTFCM	$81,240
400	1800	4000	5009/10/11US	ANTI-FRICTION	4628	4004FTAL11E-A	56	95		✓	MXTFCM	$61,976
400	1800	4000	5009/10/11US	ANTI-FRICTION	5000	4004FTAL11E-C	50	94.1	12	✓	MXTFCM	$84,417
400	1800	4000	5009/10/11US	SLEEVE	5000	4004FTQL11E-A	50	94.1	10	✓	MXTFCM	$80,410
400	1800	4000	5009/10/11US	SLEEVE	5000	4004FTQL11E-C	50	94.1	10, 12	✓	MXTFCM	$102,850
400	1200	4000	H509E	ANTI-FRICTION	4000	4006FCAL11E-CF	53.5	95.1	11, 12		MXTFCM	$84,360
400	1200	4000	5009/10/11US	ANTI-FRICTION	6500	4006FTAL11E-A	61	94.5		✓	MXTFCM	$65,480
400	1200	4000	5009/10/11US	ANTI-FRICTION	5000	4006FTAL11E-C	61	94.5	12	✓	MXTFCM	$87,920
400	900	4000	5810L	ANTI-FRICTION	6500	4008FCAL11E-CF	58.3	94.7	11, 12		MXTFCM	$91,508
400	900	4000	5809/10/11US	ANTI-FRICTION	6800	4008FTAL11E-A	60.5	94.1		✓	MXTFCM	$81,746
400	900	4000	5809/10/11US	ANTI-FRICTION	6800	4008FTAL11E-C	60.5	94.1	12	✓	MXTFCM	$103,196
400	720	4000	686S	ANTI-FRICTION	1100	F4009FLF3I-C	63.3	95	11, 12		MXTFCM	$112,548
450	3600	4000	5009/10/11USS	ANTI-FRICTION	4594	4503FTAL11F-A	59	94.5	4	✓	MXTFCM	$62,661
450	3600	4000	5009/10/11USS	ANTI-FRICTION	5052	4503FTAL11F-C	56	95.4	4, 12	✓	MXTFCM	$85,100
450	3600	4000	5810S	ANTI-FRICTION	6500	4503FCAL11F-CF	54.3	95.4	4, 11, 12		MXTFCM	$84,772
450	3600	4000	5809/10/11USS	SLEEVE	7000	4503FTQL11F-A	56	94.5	4, 10	✓	MXTFCM	$94,680
450	3600	4000	5809/10/11USS	SLEEVE	6500	4503FTQL11F-C	56	94.5	4, 10, 12	✓	MXTFCM	$107,734
450	1800	4000	H509E	ANTI-FRICTION	4000	4504FCAL11E-CF	57.4	94.5	11, 12		MXTFCM	$83,695
450	1800	4000	5009/10/11US	ANTI-FRICTION	4730	4504FTAL11E-A	63	95		✓	MXTFCM	$65,651
450	1800	4000	5009/10/11US	ANTI-FRICTION	5000	4504FTAL11E-C	56	94.1	12	✓	MXTFCM	$88,092
450	1800	4000	5009/10/11US	SLEEVE	5000	4504FTQL11E-A	56	94.1	10	✓	MXTFCM	$84,085
450	1800	4000	5009/10/11US	SLEEVE	5000	4504FTQL11E-C	56	94.1	10, 12	✓	MXTFCM	$106,525
450	1200	4000	H509E	ANTI-FRICTION	4000	4506FCAL11E-CF	59.9	95.3	11, 12		MXTFCM	$86,412
450	1200	4000	5009/10/11US	ANTI-FRICTION	5003	4506FTAL11E-A	70	94.5		✓	MXTFCM	$70,750
450	1200	4000	5009/10/11US	ANTI-FRICTION	5000	4506FTAL11E-C	70	94.1	12	✓	MXTFCM	$94,760
450	1200	4000	5809/10/11US	SLEEVE	5003	4506FTQL11E-A	70	94.5	10	✓	MXTFCM	$94,274
450	1200	4000	5809/10/11US	SLEEVE	5000	4506FTQL11E-C	70	94.1	10, 12	✓	MXTFCM	$115,724
450	900	4000	5809/10/11US	ANTI-FRICTION	6900	4508FTAL11E-A	68	94.5		✓	MXTFCM	$84,714
450	900	4000	5809/10/11US	ANTI-FRICTION	6900	4508FTAL11E-C	68	94.5	12	✓	MXTFCM	$106,164
450	900	4000	688S	ANTI-FRICTION	7500	4508FCAL11E-CF	64.6	94.5	11, 12		MXTFCM	$98,340

Totally Enclosed

Totally Enclosed Fan Cooled (TEFC) High & NEMA Premium® Efficiency

HP	Speed (RPM)	Volts	Frame	Bearing	Weight (lbs.)	Model Number	FL Amps	Nominal FL EFF	Notes	DuraBull	Discount Symbol	List Price
450	720	4000	688S	ANTI-FRICTION	7500	F4509FLF3I-C	71.4	95.4	11, 12		MXTFCM	$115,470
500	3600	4000	5811S	ANTI-FRICTION	6500	5003FCAL11F-CF	60	95.4	4, 11, 12		MXTFCM	$86,350
500	3600	4000	5809/10/11USS	ANTI-FRICTION	6500	5003FTAL11F-A	66	94.5	4	✓	MXTFCM	$77,616
500	3600	4000	5809/10/11USS	ANTI-FRICTION	7000	5003FTAL11F-C	62	94.5	4, 12	✓	MXTFCM	$102,193
500	3600	4000	5809/10/11USS	SLEEVE	7000	5003FTQL11F-A	66	94.5	4, 10	✓	MXTFCM	$96,850
500	3600	4000	5809/10/11USS	SLEEVE	6500	5003FTQL11F-C	62	94.5	4, 10, 12	✓	MXTFCM	$109,239
500	1800	4000	H509E	ANTI-FRICTION	4000	5004FCAL11E-CF	64	95	11, 12		MXTFCM	$85,750
500	1800	4000	5009/10/11US	ANTI-FRICTION	4892	5004FTAL11E-A	70	95		✓	MXTFCM	$68,367
500	1800	4000	5009/10/11US	ANTI-FRICTION	6800	5004FTAL11E-C	70	95	12	✓	MXTFCM	$90,806
500	1800	4000	5009/10/11US	SLEEVE	5000	5004FTQL11E-A	62	94.1	10	✓	MXTFCM	$86,798
500	1800	4000	5009/10/11US	SLEEVE	5000	5004FTQL11E-C	62	94.1	10, 12	✓	MXTFCM	$97,162
500	1200	4000	5810L	ANTI-FRICTION	6500	5006FCAL11E-CF	66	95.4	11, 12		MXTFCM	$94,857
500	1200	4000	5809/10/11US	ANTI-FRICTION	6274	5006FTAL11E-A	69	95.4		✓	MXTFCM	$87,132
500	1200	4000	5809/10/11US	ANTI-FRICTION	6500	5006FTAL11E-C	65	94.5	12	✓	MXTFCM	$106,460
500	1200	4000	5809/10/11US	SLEEVE	6274	5006FTQL11E-A	69	95.4	10	✓	MXTFCM	$95,663
500	1200	4000	5809/10/11US	SLEEVE	6500	5006FTQL11E-C	65	94.5	10, 12	✓	MXTFCM	$117,113
500	900	4000	5809/10/11US	ANTI-FRICTION	7000	5008FTAL11E-A	61	94.1		✓	MXTFCM	$91,662
500	900	4000	5809/10/11US	ANTI-FRICTION	7000	5008FTAL11E-C	61	94.1	12	✓	MXTFCM	$113,112
500	900	4000	688S	ANTI-FRICTION	7500	5008FCAL11E-CF	71	94.3	11, 12		MXTFCM	$142,580
500	720	4000	6809L	ANTI-FRICTION	11000	F5009FLF3I-C	79	94.2	11, 12		MXTFCM	$138,996
600	3600	4000	5809/10/11USS	ANTI-FRICTION	7016	6003FTAL11F-A	78	95	4	✓	MXTFCM	$81,231
600	3600	4000	5809/10/11USS	ANTI-FRICTION	7000	6003FTAL11F-C	74	95	4, 12	✓	MXTFCM	$105,807
600	3600	4000	5809/10/11USS	SLEEVE	7000	6003FTQL11F-A	74	95	4, 10	✓	MXTFCM	$102,880
600	3600	4000	5809/10/11USS	SLEEVE	6500	6003FTQL11F-C	74	95	4, 10, 12	✓	MXTFCM	$127,456
600	3600	4000	688H	SLEEVE	7500	6003FCQL11F-CF	72.3	95.7	4, 11, 12		MXTFCM	$102,358
600	3600	4000	6809/10/11USS	SLEEVE	15000	6003FTQL11F-CF	74	94.1	4, 10, 12	✓	MXTFCM	$156,701
600	1800	2300/4000	5009/10/11US	ANTI-FRICTION	CF	6004FTAK11E-AF	CF	CF			MXTFCM	$71,083
600	1800	2300/4000	5009/10/11US	ANTI-FRICTION	CF	6004FTAK11E-CF	CF	CF	12		MXTFCM	$95,131
600	1800	4000	5809/10/11US	ANTI-FRICTION	6714	6004FTAL11E-A	78	94.5		✓	MXTFCM	$83,646
600	1800	4000	5809/10/11US	ANTI-FRICTION	6535	6004FTAL11E-C	76	94.5	12	✓	MXTFCM	$108,222
600	1800	4000	5809/10/11US	SLEEVE	7000	6004FTQL11E-A	75	95	10	✓	MXTFCM	$100,466
600	1800	4000	5809/10/11US	SLEEVE	7000	6004FTQL11E-C	76	94.5	10, 12	✓	MXTFCM	$125,042
600	1800	4000	688S	ANTI-FRICTION	7500	6004FCAL11E-CF	76.2	95.5	11, 12		MXTFCM	$104,459
600	1200	4000	5809/10/11US	ANTI-FRICTION	6681	6006FTAL11E-A	83	95.8		✓	MXTFCM	$90,230
600	1200	4000	5809/10/11US	ANTI-FRICTION	6681	6006FTAL11E-C	83	95.8	12	✓	MXTFCM	$111,680
600	1200	4000	5809/10/11US	SLEEVE	6681	6006FTQL11E-A	83	95.8	10	✓	MXTFCM	$105,730
600	1200	4000	5809/10/11US	SLEEVE	6681	6006FTQL11E-C	83	95.8	10, 12	✓	MXTFCM	$127,180
600	1200	4000	6809L	ANTI-FRICTION	11000	6006FCAL11E-CF	79.2	95.3	11, 12		MXTFCM	$108,221
600	900	4000	6809L	ANTI-FRICTION	11000	6008FCAL11E-CF	83.1	94.1	11, 12		MXTFCM	$158,396
600	900	4000	6809/10/11US	ANTI-FRICTION	15000	6008FTAL11E-C	85	95.4	12	✓	MXTFCM	$172,229
600	900	4000	6809/10/11US	SLEEVE	15000	6008FTQL11E-C	85	95.4	10, 12	✓	MXTFCM	$187,729
600	720	4000	6811L	ANTI-FRICTION	11000	F6009FLF3I-C	94.8	94	12		MXTFCM	$146,960

Totally Enclosed

Totally Enclosed
Fan Cooled (TEFC)
High & NEMA Premium® Efficiency

HP	Speed (RPM)	Volts	Frame	Bearing	Weight (lbs.)	Model Number	FL Amps	Nominal FL EFF	Notes	DuraBull	Discount Symbol	List Price
700	3600	4000	6810H	SLEEVE	11000	7003FCQL11F-CF	84.2	95.7	4, 11, 12		MXTFCM	$158,324
700	3600	4000	6809/10/11USS	SLEEVE	14000	7003FTQL11F-C	86	94.1	4, 10, 12	✓	MXTFCM	$164,320
700	1800	4000	5809/10/11US	ANTI-FRICTION	7047	7004FTAL11E-A	92	95		✓	MXTFCM	$91,874
700	1800	4000	5809/10/11US	ANTI-FRICTION	6600	7004FTAL11E-C	88	94.5	12	✓	MXTFCM	$116,452
700	1800	4000	5809/10/11US	SLEEVE	7000	7004FTQL11E-A	86	95	10	✓	MXTFCM	$111,109
700	1800	4000	5809/10/11US	SLEEVE	7000	7004FTQL11E-C	88	94.5	10, 12	✓	MXTFCM	$135,686
700	1800	4000	6809L	ANTI-FRICTION	11000	7004FCAL11E-CF	88.7	95.9	11, 12		MXTFCM	$138,360
700	1200	4000	5809/10/11US	ANTI-FRICTION	7084	7006FTAL11E-A	96	95.8		✓	MXTFCM	$95,400
700	1200	4000	5809/10/11US	ANTI-FRICTION	7084	7006FTAL11E-C	96	95.8	12	✓	MXTFCM	$116,850
700	1200	4000	6809L	ANTI-FRICTION	11000	7006FCAL11E-CF	92	95.2	11, 12		MXTFCM	$127,540
700	900	4000	6810L	ANTI-FRICTION	11000	7008FCAL11E-CF	95.1	94.4	11, 12		MXTFCM	$162,312
700	900	4000	6809/10/11US	ANTI-FRICTION	15000	7008FTAL11E-C	99	95.4	12	✓	MXTFCM	$173,586
700	900	4000	6809/10/11US	SLEEVE	15000	7008FTQL11E-C	99	95.4	10, 12	✓	MXTFCM	$189,086
700	720	4000	6811L	ANTI-FRICTION	11000	F7009FLF3I-C	110.3	94.2	11, 12		MXTFCM	$154,360
800	3600	4000	6809/10/11USS	SLEEVE	14000	8003FTQL11F-C	97	94.5	4, 10, 12		MXTFCM	$173,480
800	3600	4000	6811H	SLEEVE	11000	8003FCQL11F-CF	96.2	96	4, 11, 12		MXTFCM	$162,450
800	1800	4000	5809/10/11US	ANTI-FRICTION	7237	8004FTAL11E-A	105	95		✓	MXTFCM	$93,989
800	1800	4000	5809/10/11US	ANTI-FRICTION	7000	8004FTAL11E-C	100	95	12	✓	MXTFCM	$118,566
800	1800	4000	5809/10/11US	SLEEVE	7000	8004FTQL11E-A	102	95	10	✓	MXTFCM	$113,223
800	1800	4000	5809/10/11US	SLEEVE	7000	8004FTQL11E-C	100	95	10, 12	✓	MXTFCM	$137,801
800	1800	4000	6810L	ANTI-FRICTION	11000	8004FCAL11E-CF	101.2	96.2	11, 12		MXTFCM	$142,804
800	1200	4000	6810L	ANTI-FRICTION	11000	8006FCAL11E-CF	104.7	95.2	11, 12		MXTFCM	$148,360
800	1200	4000	6809/10/11US	ANTI-FRICTION	9000	8006FTAL11E-C	101	95.8	12	✓	MXTFCM	$158,664
800	1200	4000	6809/10/11US	SLEEVE	9000	8006FTQL11E-C	101	95.8	10, 12	✓	MXTFCM	$172,382
800	900	4000	6809/10/11US	ANTI-FRICTION	15000	8008FTAL11E-C	114	95.8	12	✓	MXTFCM	$175,182
800	900	4000	6809/10/11US	SLEEVE	15000	8008FTQL11E-C	113	95.8	10, 12		MXTFCM	$190,682
800	900	4000	6811L	ANTI-FRICTION	11000	8008FCAL11E-CF	106.9	95.6	11, 12		MXTFCM	$168,673
800	720	4000	6811L	ANTI-FRICTION	11000	F8009FLF3I-C	125.9	94.9	11, 12		MXTFCM	$159,668
900	3600	4000	6809/10/11USS	SLEEVE	14500	9003FTQL11E-C	109	95	4, 10, 12	✓	MXTFCM	$186,628
900	3600	4000	6811H	SLEEVE	11000	9003FCQL11F-CF	108.2	95.3	4, 11, 12		MXTFCM	$178,368
900	1800	4000	6809/10/11US	ANTI-FRICTION	9000	9004FTAL11E-C	115	94.5	12	✓	MXTFCM	$172,542
900	1800	4000	6809/10/11US	SLEEVE	9000	9004FTQL11E-C	115	94.5	10, 12	✓	MXTFCM	$185,330
900	1800	4000	6811L	ANTI-FRICTION	11000	9004FCAL11E-CF	115	96	11, 12		MXTFCM	$168,412
900	1200	4000	6809/10/11US	ANTI-FRICTION	9000	9006FTAL11E-C	113	95.8	12	✓	MXTFCM	$176,420
900	1200	4000	6809/10/11US	SLEEVE	9000	9006FTQL11E-C	113	95.8	10, 12	✓	MXTFCM	$189,868
900	1200	4000	6811L	ANTI-FRICTION	11000	9006FCAL11E-CF	118	96	11, 12		MXTFCM	$181,442
900	900	4000	N7808	ANTI-FRICTION	15000	J9008FLF3I-C	120	95.8	1, 12		MXTFCM	$184,384
900	720	4000	N7808	ANTI-FRICTION	15000	J9009FLF3I-C	120	95.8	1, 12		MXTFCM	$197,964
1000	3600	4000	6809/10/11USS	SLEEVE	15000	M203FTQL11E-C	121	95.4	4, 10, 12	✓	MXTFCM	$208,250
1000	1800	4000	N6810	ANTI-FRICTION	12000	J1004FLF3I-C	126.1	96.3	1, 12		MXTFCM	$146,870
1000	1800	4000	6809/10/11US	ANTI-FRICTION	9000	M204FTAL11E-C	127	94.5	12	✓	MXTFCM	$185,664
1000	1800	4000	6809/10/11US	SLEEVE	9000	M204FTQL11E-C	127	94.5	10, 12	✓	MXTFCM	$206,884
1000	1200	4000	N6810	ANTI-FRICTION	12000	J1006FLF3I-C	131	96	1, 12		MXTFCM	$150,709

Totally Enclosed

Totally Enclosed Fan Cooled (TEFC) High & NEMA Premium® Efficiency

HP	Speed (RPM)	Volts	Frame	Bearing	Weight (lbs.)	Model Number	FL Amps	Nominal FL EFF	Notes	DuraBull	Discount Symbol	List Price
1000	1200	4000	6809/10/11US	ANTI-FRICTION	9000	M206FTAL11E-C	127	94.5	12	✓	MXTFCM	$195,409
1000	1200	4000	6809/10/11US	SLEEVE	9000	M206FTQL11E-C	127	94.5	10, 12	✓	MXTFCM	$207,114
1000	900	4000	N7808	ANTI-FRICTION	15000	J1008FLF3I-C	133	95.8	1, 12		MXTFCM	$181,359
1000	720	4000	N7808	ANTI-FRICTION	15000	J1010FLF3I-C	133	95.8	1, 12		MXTFCM	$208,355
1250	1800	4000	N6810	ANTI-FRICTION	12000	J1254FLF3I-C	158	96	1, 12		MXTFCM	$164,937
1250	1800	4000	6809/10/11US	ANTI-FRICTION	9000	M254FTAL11E-C	158	95	12	✓	MXTFCM	$204,312
1250	1800	4000	6809/10/11US	SLEEVE	9000	M254FTQL11E-C	158	95	10, 12	✓	MXTFCM	$214,388
1250	1200	4000	N7808	ANTI-FRICTION	15000	J1256FLF3I-C	162	95.8	1, 12		MXTFCM	$195,627
1250	900	4000	N8810	ANTI-FRICTION	18700	J1258FLF3I-C	164	95.8	1, 12		MXTFCM	$238,719
1500	1800	4000	N7808	ANTI-FRICTION	15000	J1504FLF3I-C	186	96.5	1, 12		MXTFCM	$194,276
1500	1200	4000	N7808	ANTI-FRICTION	15000	J1506FLF3I-C	195	95.8	1, 12		MXTFCM	$214,399
1500	900	4000	N8810	ANTI-FRICTION	18700	J1508FLF3I-C	197	95.8	1, 12		MXTFCM	$262,365
1750	1800	4000	N7808	ANTI-FRICTION	15000	J1754FLF3I-C	216	96.5	1, 12		MXTFCM	$207,933
1750	1200	4000	N8810	ANTI-FRICTION	18700	J1756FLF3I-C	222	96.5	1, 12		MXTFCM	$257,635
2000	1800	4000	N8810	ANTI-FRICTION	18700	J2004FLF3I-C	247	96.5	1, 12		MXTFCM	$242,965
2000	1200	4000	N8810	ANTI-FRICTION	18700	J2006FLF3I-C	253	96.5	1, 12		MXTFCM	$271,822
2250	1800	4000	N8810	ANTI-FRICTION	18700	J2254FLF3I-C	278	96.5	1, 12		MXTFCM	$247,791
2250	1200	4000	N8810	ANTI-FRICTION	18700	J2256FLF3I-C	284	96.5	1, 12		MXTFCM	$285,623
2500	1800	4000	N8810	ANTI-FRICTION	18700	J2504FLF3I-C	305	96.5	1, 12		MXTFCM	$267,093

FL Amps and FL EFF are average expected design values and not guaranteed.
The weights listed above are estimated.
Please contact Toshiba for information on product availability.
"CF" = Consult Factory

Totally Enclosed

Totally Enclosed Explosion Proof (TEXP)

High Efficiency

The general purpose, Totally Enclosed Explosion Proof, high efficiency motor series is built to meet the UL and CSA Listed Hazardous Locations requirements. This product line is designed for use in Class I, Division 1, Group D, and Class II, Division 1, Groups F, and G. It is ideal for indoor and outdoor use and offers the performance and reliability the motor industry has come to expect from Toshiba, which makes the Explosion Proof motor the clear choice for your toughest environments and applications.

Product Scope:

Horsepower:	200 to 1000 HP
Speed:	3600, 1800, 1200, 900, or 720 RPM
Voltage:	2300/4000 or 4000 V*
Enclosure:	Totally Enclosed Fan Cooled: IP55
Frame Size:	449T Through 6811L
Construction:	Cast Iron Frame, End Brackets, & Terminal Box
Vibration:	Typically 0.12 Inches/Second or Less (Unfiltered)
Insulation:	Class F

*Contact Toshiba for additional voltage options

General Features:

- Space Heater (120 V, I, 60)
  – Wired to an Auxiliary Box
- Bearing RTD Provisions - F2
- Insulated NDE Bearing (Where Noted)
- Insulated DE and NDE Bearings Available (Where Noted)
- Copper Bar Design Only
- Thermally Protected Winding
- Non-Sparking Brass Shaft Seal on DE
- Cast Iron Fan Cover for 509 and Smaller Frames (Option for Fabricated Steel) and Fabricated Steel Fan Cover for 5800 and Larger Frames
- Div 1, Class I – Group D
  (Consult Factory for Group C Option)
- Div 1, Class II – Group F and G
  (Consult Factory for Group E Option)
- Consult Factory for Applicable Temperature Code
- UL Listed File No. E43726
- CSA Master Contract – MC 200618

HP	Speed (RPM)	Volts	Frame	Bearing	Weight (lbs.)	Model Number	FL Amps	Nominal FL EFF	Notes	Discount Symbol	List Price
200	3600	2300/4000	N449TS	ANTI-FRICTION	3500	2003XPAK11B-C	43/24.2	92.4	4, 12	MXTFCM	$60,432
200	1800	2300/4000	N449T	ANTI-FRICTION	3500	2004XPAK11A-C	45/25.8	93	12	MXTFCM	$59,349
200	1200	2300/4000	N449T	ANTI-FRICTION	3500	2006XPAK11A-C	48/27.3	93.6	12	MXTFCM	$64,975
200	900	4000	509E	ANTI-FRICTION	4000	2008XPAL11A-C	31.7	94.1	12	MXTFCM	$71,112
200	720	4000	D509E	ANTI-FRICTION	4000	F2009YLF3I-C	32.1	92.6	12	MXTFCM	$83,486
250	3600	4000	509US	ANTI-FRICTION	4000	2503XPAL11F-C	30.2	93.6	4, 12	MXTFCM	$69,047
250	1800	2300/4000	449T	ANTI-FRICTION	3500	2504XPAK11A-C	56/32.1	93	12	MXTFCM	$63,615
250	1200	4000	509E	ANTI-FRICTION	4000	2506XPAL11E-C	33.9	94.1	12	MXTFCM	$73,516
250	900	4000	D509E	ANTI-FRICTION	4000	2508XPAL11E-C	38.6	94.5	12	MXTFCM	$82,812
250	720	4000	D509E	ANTI-FRICTION	4000	F2509YLF3I-C	40	93.3	12	MXTFCM	$85,305
300	3600	4000	H509US	ANTI-FRICTION	4500	3003XPAL11F-C	36.3	94.5	4, 12	MXTFCM	$84,054
300	1800	4000	509E	ANTI-FRICTION	4000	3004XPAL11E-C	38.5	93.6	12	MXTFCM	$68,436
300	1200	4000	509E	ANTI-FRICTION	4000	3006XPAL11E-C	40.5	94.5	12	MXTFCM	$74,098
300	900	4000	H509E	ANTI-FRICTION	4500	3008XPAL11E-C	45.3	94.8	12	MXTFCM	$89,087
300	720	4000	H509E	ANTI-FRICTION	4500	F3009YLF3I-C	47.9	94	12	MXTFCM	$92,908

Totally Enclosed

Totally Enclosed Explosion Proof (TEXP) High Efficiency

HP	Speed (RPM)	Volts	Frame	Bearing	Weight (lbs.)	Model Number	FL Amps	Nominal FL EFF	Notes	Discount Symbol	List Price
350	3600	4000	H509US	ANTI-FRICTION	4500	3503XPAL11F-C	42.3	95	4, 12	MXTFCM	$85,744
350	1800	4000	509E	ANTI-FRICTION	4000	3504XPAL11E-C	44.8	94.1	12	MXTFCM	$73,830
350	1200	4000	D509E	ANTI-FRICTION	4500	3506XPAL11E-C	47	94.5	12	MXTFCM	$80,537
350	900	4000	H509E	ANTI-FRICTION	4500	3508XPAL11E-C	51.8	94.8	12	MXTFCM	$90,896
350	720	4000	5810L	ANTI-FRICTION	6500	F3509YLF3I-C	55.7	94.5	12	MXTFCM	$131,636
400	3600	4000	H509US	ANTI-FRICTION	4500	4003XPAL11F-C	48.3	95.4	4, 12	MXTFCM	$88,884
400	1800	4000	D509E	ANTI-FRICTION	4500	4004XPAL11E-C	51.1	94.5	12	MXTFCM	$82,254
400	1200	4000	H509E	ANTI-FRICTION	4500	4006XPAL11E-C	53.5	95.1	12	MXTFCM	$87,498
400	900	4000	5811L	ANTI-FRICTION	7000	4008XPAL11E-C	58.3	94.7	12	MXTFCM	$132,361
400	720	4000	686S	ANTI-FRICTION	7500	F4009YLF3I-C	63.6	95	12	MXTFCM	$141,003
450	3600	4000	5810S	ANTI-FRICTION	6500	4503XPAL11F-C	54.3	95.4	4, 12	MXTFCM	$130,428
450	1800	4000	H509E	ANTI-FRICTION	5000	4504XPAL11E-C	57.4	94.5	12	MXTFCM	$87,293
450	1200	4000	H509E	ANTI-FRICTION	5000	4506XPAL11E-C	59.9	95.3	12	MXTFCM	$88,408
450	900	4000	688S	ANTI-FRICTION	7500	4508XPAL11E-C	64.6	94.5	12	MXTFCM	$140,172
450	720	4000	688S	ANTI-FRICTION	7500	F4509YLF3I-C	71.4	95.4	12	MXTFCM	$148,838
500	3600	4000	5811S	ANTI-FRICTION	7000	5003XPAL11F-C	60.3	95.4	4, 12	MXTFCM	$135,259
500	1800	4000	H509E	ANTI-FRICTION	4500	5004XPAL11E-C	63.7	95	12	MXTFCM	$89,693
500	1200	4000	5810L	ANTI-FRICTION	6500	5006XPAL11E-C	66.4	95.4	12	MXTFCM	$134,051
500	900	4000	688S	ANTI-FRICTION	7500	5008XPAL11E-C	70.8	94.3	12	MXTFCM	$151,877
500	720	4000	6809L	ANTI-FRICTION	11000	F5009YLF3I-C	79.2	94.2	12	MXTFCM	$174,750
600	3600	4000	688H	SLEEVE	7500	6003XPQL11F-C	72.3	95.7	4, 12	MXTFCM	$154,920
600	1800	4000	688S	ANTI-FRICTION	7500	6004XPAL11E-C	76.2	95.5	12	MXTFCM	$140,259
600	1200	4000	6809L	ANTI-FRICTION	11000	6006XPAL11E-C	79.2	95.3	12	MXTFCM	$169,352
600	900	4000	6809L	ANTI-FRICTION	11000	6008XPAL11E-C	83.1	94.1	12	MXTFCM	$173,837
600	720	4000	6811L	ANTI-FRICTION	12000	F6009YLF3I-C	94.8	94	12	MXTFCM	$192,017
700	3600	4000	6810H	SLEEVE	11000	7003XPQL11F-C	84.2	95.7	4, 12	MXTFCM	$180,668
700	1800	4000	6809L	ANTI-FRICTION	11000	7004XPAL11E-C	88.7	95.9	12	MXTFCM	$174,750
700	1200	4000	6809L	ANTI-FRICTION	11000	7006XPAL11E-C	92	95.2	12	MXTFCM	$177,334
700	900	4000	6810L	ANTI-FRICTION	11000	7008XPAL11E-C	95.1	94.4	12	MXTFCM	$185,561
700	720	4000	6811L	ANTI-FRICTION	12000	F7009YLF3I-C	110.3	94.2	12	MXTFCM	$194,109
800	3600	4000	6811H	SLEEVE	12000	8003XPQL11F-C	96.2	96	4, 12	MXTFCM	$195,643
800	1800	4000	6810L	ANTI-FRICTION	11000	8004XPAL11E-C	101.2	96.2	12	MXTFCM	$184,291
800	1200	4000	6810L	ANTI-FRICTION	11000	8006XPAL11E-C	104.7	95.2	12	MXTFCM	$192,020
800	900	4000	6811L	ANTI-FRICTION	12000	8008XPAL11E-C	106.9	95.6	12	MXTFCM	$194,193
800	720	4000	6811L	ANTI-FRICTION	12000	F8009YLF3I-C	125.9	94.5	12	MXTFCM	$198,300
900	3600	4000	6811H	SLEEVE	12000	9003XPQL11F-C	108.2	97	4, 12	MXTFCM	$198,058
900	1800	4000	6811L	ANTI-FRICTION	12000	9004XPAL11E-C	113.6	96.3	12	MXTFCM	$188,273
900	1200	4000	6811L	ANTI-FRICTION	12000	9006XPAL11E-C	117.3	95.3	12	MXTFCM	$195,462
900	900	4000	6811L	ANTI-FRICTION	12000	9008XPAL11E-C	118.6	98.2	12	MXTFCM	$196,850
1000	1800	4000	6811L	ANTI-FRICTION	12000	M204XPAL11E-C	126.1	96.3	12	MXTFCM	$196,850

FL Amps and FL EFF are average expected design values and not guaranteed.
The weights listed above are estimated.
Please contact Toshiba for information on product availability.
"CF" = Consult Factory

Totally Enclosed

Totally Enclosed Fan Cooled 840/841

High & NEMA Premium® Efficiency

NEW PRODUCT

The TEFC 840/841 motor offers severe duty IP55 protection for the toughest material processing applications such as compressors, pumps, fans, and conveyors. Its low temperature and low vibration design provides additional durability to withstand these harsh environments, decreasing maintenance requirements and chances of failures while ultimately increasing the motor's lifespan. Built with certain IEEE Std. 841™ specifications, Toshiba's TEFC 840/841 motor is the ideal solution for oil and gas, mining and mineral, and pulp and paper industries.

Product Scope:

Horsepower:	100 to 500 HP
Speed (60 Hz):	3600, 1800, 1200, or 900 RPM
Volt (60 Hz):	2300/4000 or 4000 V*
Enclosure:	Totally Enclosed Fan Cooled: IP55
Frame Size:	449T through 5809/10/11US
Construction:	Cast Iron Frame & Brackets with Cast Iron or Fabricated Steel Terminal Box(es) & Fan Cover

*Contact Toshiba for additional voltage and frame sizes

General Features:

- Winding RTDs (100 Ohm Platinum, Two per Phase) – Wired to an Auxiliary Box
- Space Heater (120 V, I, 60) – Wired to an Auxiliary Box
- Bearing RTDs/Vibration Provisions
- IEEE 841 Nameplated up to 400 HP
- Non-Contacting Labyrinth Seals on Both Bearings
- Tropicalization Treatment on Windings
- Grounding Lugs on Motor Frame and Inside Main T-Box
- 0.005-Inch Precision Foot Flatness
- Non-Sparking, Epoxy-Coated Aluminum Internal Fan
- Direction of Rotation Arrow for Motors with Uni-Directional Rotation
- Gasketed Main T-Box and Auxiliary T-Box
- Lead Separator Gaskets
- Corrosion-Resistant Replaceable Drainage Fitting at Lowest Part of Motor Frame and Inside Main T-Box
- Precision Unfiltered Vibration Velocity
  - 2-Pole: 0.10 Inches/Second
  - 4 and 6-Pole: 0.08 Inches/Second
  - 8-Pole: 0.06 Inches/Second
- Severe Duty, Corrosion-Resistant, Rust-Inhibitive Paint System on Motor and Shaft/Rotor Assembly
- Corrosion-Resistant Hardware
- Div 2, Class I – Groups A, B, C, and D
- Standard Non-Witnessed Routine Testing per IEEE 112

HP	Speed (RPM)	Volts	Frame	Weight (lbs.)	Product Family	Model Number	FL Amps	Nominal FL EFF	Notes	Discount Symbol	List Price
100	3600	2300/4000	S449TS	CF	MV 841	1003XDAK41B-A	22.1/12.7	93	4	MXTFCM	$54,627
100	1800	2300/4000	S449T	3500	MV 841	1004XDAK41A-A	25/15	93.6		MXTFCM	$53,785
100	1200	2300/4000	S449T	3500	MV 841	1006XDAK41A-A	CF	CF		MXTFCM	$64,046
125	3600	2300/4000	S449TS	CF	MV 841	1253XDAK41B-A	27.5/15.8	93.6	4	MXTFCM	$55,468
125	1800	2300/4000	S449T	3500	MV 841	1254XDAK41A-A	31/18	94.1		MXTFCM	$54,627
125	1200	2300/4000	S449T	3500	MV 841	1256XDAK41A-A	CF	CF		MXTFCM	$64,874
125	900	2300/4000	S449T	3500	MV 841	1258XDAK41A-A	35/20	94.5		MXTFCM	$67,724

Totally Enclosed

Totally Enclosed
Fan Cooled 840/841
High & NEMA Premium® Efficiency

HP	Speed (RPM)	Volts	Frame	Weight (lbs.)	Product Family	Model Number	FL Amps	Nominal FL EFF	Notes	Discount Symbol	List Price
150	3600	2300/4000	S449TS	CF	MV 841	1503XDAK41B-A	32.9/18.9	94.5	4	MXTFCM	$56,695
150	1800	2300/4000	S449T	3500	MV 841	1504XDAK41A-A	38/22	94.5		MXTFCM	$56,130
150	1200	2300/4000	S449T	3500	MV 841	1506XDAK41A-A	35/20	94.5		MXTFCM	$66,104
150	900	2300/4000	S449T	3500	MV 841	1508XDAK41A-A	42/24	94.5		MXTFCM	$68,442
200	3600	2300/4000	S449TS	CF	MV 841	2003XDAK41B-A	44/25	95	4	MXTFCM	$60,193
200	1800	2300/4000	S449T	3500	MV 841	2004XDAK41A-A	50/29	95		MXTFCM	$57,850
200	1200	2300/4000	S449T	3500	MV 841	2006XDAK41A-A	47/27	95		MXTFCM	$67,952
200	900	2300/4000	S449T	3500	MV 841	2008XDAK41A-A	56/32	95		MXTFCM	$70,802
200	900	4000	5009/10/11US	5000	MV 840	2008XSAL11E-A	30	93.6		MXTFCM	$73,058
200	900	4000	5009/10/11US	5000	MV 840	2008XSAL11E-C	28	93	12	MXTFCM	$93,458
250	3600	2300/4000	S449TS	CF	MV 841	2503XDAK41B-A	56/32	95	4	MXTFCM	$61,807
250	1800	2300/4000	S449T	3500	MV 841	2504XDAK41A-A	64/37	95		MXTFCM	$59,820
250	1200	2300/4000	S449T	3500	MV 841	2506XDAK41A-A	61/35	95		MXTFCM	$69,766
250	1200	4000	5009/10/11US	5000	MV 840	2506XSAL11E-AF	37	94.1		MXTFCM	$72,223
250	1200	4000	5009/10/11US	5000	MV 840	2506XSAL11E-CF	37	94.1	12	MXTFCM	$94,623
250	900	2300/4000	B449T	4000	MV 841	2508XDAK41A-A	73/42	95		MXTFCM	$73,161
250	900	4000	5009/10/11US	5000	MV 840	2508XSAL11E-A	38	93.6		MXTFCM	$73,637
250	900	4000	5009/10/11US	5000	MV 840	2508XSAL11E-C	36	93	12	MXTFCM	$94,860
300	3600	2300/4000	B449TS	CF	MV 841	3003XDAK41B-A	67/38	95	4	MXTFCM	$63,391
300	1800	2300/4000	S449T	3500	MV 841	3004XDAK41A-A	76/44	95		MXTFCM	$62,356
300	1800	4000	5009/10/11US	5000	MV 840	3004XSAL11E-AF	46	94.5		MXTFCM	$64,493
300	1800	4000	5009/10/11US	5000	MV 840	3004XSAL11E-CF	40	93	12	MXTFCM	$86,932
300	1200	2300/4000	B449T	4000	MV 841	3006XDAK41A-A	71/41	95		MXTFCM	$71,596
300	1200	4000	5009/10/11US	5000	MV 840	3006XSAL11E-A	45	94.5		MXTFCM	$73,094
300	1200	4000	5009/10/11US	5000	MV 840	3006XSAL11E-C	45	94.5	12	MXTFCM	$95,534
300	900	2300/4000	B449T	4000	MV 841	3008XDAK41A-A	83/48	95	3, 14	MXTFCM	$75,521
300	900	4000	5009/10/11US	5000	MV 840	3008XSAL11E-A	46	94.1		MXTFCM	$76,864
300	900	4000	5009/10/11US	5000	MV 840	3008XSAL11E-C	43	93.6	12	MXTFCM	$95,360
350	3600	2300/4000	B449TS	CF	MV 841	3503XDAK41B-A	82/47	95	4	MXTFCM	$65,086
350	3600	4000	5009/10/11USS	5000	MV 840	3503XSAL11F-A	46	93.6	4	MXTFCM	$66,178
350	3600	4000	5009/10/11USS	5000	MV 840	3503XSAL11F-C	44	95	4, 12	MXTFCM	$88,617
350	1800	2300/4000	B449T	4000	MV 841	3504XDAK41A-A	88/51	95.4		MXTFCM	$63,637
350	1800	4000	5009/10/11US	5000	MV 840	3504XSAL11E-AF	50	94.5		MXTFCM	$65,387
350	1800	4000	5009/10/11US	5000	MV 840	3504XSAL11E-CF	50	94.5	12	MXTFCM	$87,827
350	1200	2300/4000	B449T	4000	MV 841	3506XDAK41A-A	83/48	95.4		MXTFCM	$73,427
350	1200	4000	5009/10/11US	5000	MV 840	3506XSAL11E-A	51	94.1		MXTFCM	$73,957
350	1200	4000	5009/10/11US	5000	MV 840	3506XSAL11E-C	51	94.5	12	MXTFCM	$96,398
350	900	4000	5809/10/11US	7000	MV 840	3508XSAL11E-A	52	94.1		MXTFCM	$88,468
350	900	4000	5809/10/11US	7000	MV 840	3508XSAL11E-C	50	93.6	12	MXTFCM	$110,868
400	3600	2300/4000	B449TS	CF	MV 841	4003XDAK41B-A	95/55	95	4	MXTFCM	$66,718

Totally Enclosed

Totally Enclosed
Fan Cooled 840/841
High & NEMA Premium® Efficiency

HP	Speed (RPM)	Volts	Frame	Weight (lbs.)	Product Family	Model Number	FL Amps	Nominal FL EFF	Notes	Discount Symbol	List Price
400	3600	4000	5009/10/11USS	5000	MV 840	4003XSAL11F-A	52	94.1	4	MXTFCM	$71,413
400	3600	4000	5809/10/11USS	7000	MV 840	4003XSAL11F-C	50	94.1	4, 12	MXTFCM	$93,854
400	1800	2300/4000	B449T	4000	MV 841	4004XDAK41A-A	100/58	95.4		MXTFCM	$64,745
400	1800	4000	5009/10/11US	5000	MV 840	4004XSAL11E-A	56	95		MXTFCM	$72,761
400	1800	4000	5009/10/11US	5000	MV 840	4004XSAL11E-C	50	94.1	12	MXTFCM	$95,202
400	1200	4000	5009/10/11US	5000	MV 840	4006XSAL11E-A	61	94.5		MXTFCM	$76,265
400	1200	4000	5009/10/11US	5000	MV 840	4006XSAL11E-C	58	94.1	12	MXTFCM	$98,705
400	900	4000	5809/10/11US	7000	MV 840	4008XSAL11E-A	61	94.1		MXTFCM	$92,531
400	900	4000	5809/10/11US	7000	MV 840	4008XSAL11E-C	58	93.6	12	MXTFCM	$114,931
450	3600	4000	5009/10/11USS	5000	MV 840	4503XSAL11F-A	59	94.5	4	MXTFCM	$73,446
450	3600	4000	5809/10/11USS	7000	MV 840	4503XSAL11F-C	56	95.4	4, 12	MXTFCM	$95,885
450	1800	4000	5009/10/11US	5000	MV 840	4504XSAL11E-A	63	95		MXTFCM	$76,436
450	1800	4000	5009/10/11US	5000	MV 840	4504XSAL11E-C	56	94.1	12	MXTFCM	$98,877
450	1200	4000	5009/10/11US	5000	MV 840	4506XSAL11E-A	70	94.5		MXTFCM	$81,535
450	1200	4000	5009/10/11US	5000	MV 840	4506XSAL11E-C	66	94.1	12	MXTFCM	$105,545
450	900	4000	5809/10/11US	7000	MV 840	4508XSAL11E-A	68	94.5		MXTFCM	$95,499
450	900	4000	5809/10/11US	7000	MV 840	4508XSAL11E-C	64	94.1	12	MXTFCM	$117,899
500	3600	4000	5809/10/11USS	7000	MV 840	5003XSAL11F-A	66	94.5	4	MXTFCM	$88,401
500	3600	4000	5809/10/11USS	7000	MV 840	5003XSAL11F-C	62	94.5	4, 12	MXTFCM	$112,978
500	1800	4000	5009/10/11US	5000	MV 840	5004XSAL11E-A	70	95		MXTFCM	$79,152
500	1800	4000	5009/10/11US	5000	MV 840	5004XSAL11E-C	62	94.1	12	MXTFCM	$101,591
500	1200	4000	5809/10/11US	7000	MV 840	5006XSAL11E-A	69	95.4		MXTFCM	$90,948
500	1200	4000	5809/10/11US	7000	MV 840	5006XSAL11E-C	64	94.5	12	MXTFCM	$113,348
500	900	4000	5809/10/11US	7000	MV 840	5008XSAL11E-A	61	94.1		MXTFCM	$102,447
500	900	4000	5809/10/11US	7000	MV 840	5008XSAL11E-C	58	94.1	12	MXTFCM	$123,622

NOTE: NEMA Premium efficiency not applicable on motors below 250 HP.
FL Amps and FL EFF are average expected design values and not guaranteed.
The weights listed above are estimated.
Please contact Toshiba for information on product availability.
"CF" = Consult Factory

Totally Enclosed

Totally Enclosed Air-Air Cooled (TEAAC)

High Efficiency

Toshiba's general purpose, medium voltage totally enclosed air-to-air cooled motor offering includes a top hat design. Designed to meet the industry's ever-increasing need for improved energy conservation and product performance, this product line offers exceptionally high torque and a low vibration design, leading to longer life and greater reliability.

Toshiba's medium voltage motor offerings are completely customizable due to our in-house design, engineering, and manufacturing capabilities. This allows us to not only meet, but exceed your specific application requirements.

Product Scope:

Horsepower:	450 to 8000 HP
Speed (60 Hz):	3600, 1800, 1200, or 900 RPM*
Volt (60 Hz):	4000 V, Option for 2300 V**
Enclosure:	Totally Enclosed Air-to-Air Cooled
Frame Size:	5010 through 1089
Construction:	Cast Iron Frame, End Brackets, & Main Terminal Box or Fabricated Steel Frame & Main Terminal Box; Thick-Walled Heavy Fabricated Steel Frame for 1080 through 1420 & 8800 Frame
Insulation:	Class F with Class B Rise at 1.0 Service Factor by RM
Environment:	Suitable for Indoor or Outdoor

*Contact Toshiba for availability on lower speed designs
**Contact Toshiba for availability on 6000 and 13,200 V, 60 Hz motors

General Features:

- Winding RTDs (100 Ohm Platinum, Two per Phase) – Wired to an Auxiliary Box
- Space Heater (120 V, I, 60) – Wired to an Auxiliary Box
- Bearing RTDs/Vibration Provisions
- Insulated NDE Bearing for 450, 6800 and Smaller Frames (for Anti-Friction Ball Bearing)
- Insulated NDE Bearing for 1080 and 8800 Frames
- Insulated Sleeve Bearings for 6800 and Smaller Frames
- Copper Bar Rotor Construction with Phosphorous Free Brazing
- Multi-Mount Capability on 5811/12US (Optional for 5810/12), 6810/11/12, and 6812/13 Frames

Additional Options Available;
See Catalog Production Modifications Section

HP	Speed (RPM)	Volts	Frame	Bearing	Weight (lbs.)	Model Number	FL Amps	Nominal FL EFF	Notes	Discount Symbol	List Price	Rotor Construction
450	1200	4000	T5010L	ANTI-FRICTION	5000	F4506WLF3I-C	56	92.6	11, 12	MXTAAM	$124,812	COPPER
450	1200	4000	T5010L	SLEEVE	5000	F4506WLFLI-C	56	93.8	11, 12	MXTAAM	$140,312	COPPER
450	900	4000	5811/12US	ANTI-FRICTION	9100	4508TCAL11E-A	68	93.6		MXTAAM	$108,806	ALUMINUM
450	900	4000	5811/12US	ANTI-FRICTION	9100	4508TCAL11E-C	63	93.6	12	MXTAAM	$132,213	COPPER
450	900	4000	T5012L	ANTI-FRICTION	5500	F4508WLF3I-C	60	94.3	11, 12	MXTAAM	$130,412	COPPER
450	900	4000	T5012L	SLEEVE	5000	F4508WLFLI-C	60	94.3	11, 12	MXTAAM	$145,912	COPPER
500	3600	4000	T5010H	ANTI-FRICTION	5000	F5003WLF3I-C	66	93.6	4, 11, 12	MXTAAM	$106,580	COPPER
500	1800	4000	T5010L	ANTI-FRICTION	5000	F5004WLF3L-C	65	93	11, 12	MXTAAM	$121,377	COPPER
500	1800	4000	T5010L	SLEEVE	5000	F5004WLFLI-C	65	93	11, 12	MXTAAM	$136,877	COPPER
500	1200	4000	T5010L	ANTI-FRICTION	5000	F5006WLF3I-C	73	93.5	11, 12	MXTAAM	$126,360	COPPER
500	1200	4000	T5010L	SLEEVE	5000	F5006WLFLI-C	73	93.5	11, 12	MXTAAM	$141,860	COPPER

Totally Enclosed

Totally Enclosed Air-Air Cooled (TEAAC) High Efficiency

HP	Speed (RPM)	Volts	Frame	Bearing	Weight (lbs.)	Model Number	FL Amps	Nominal FL EFF	Notes	Discount Symbol	List Price	Rotor Construction
500	900	4000	5811/12US	ANTI-FRICTION	9100	5008TCAL11E-A	75	93.6		MXTAAM	$109,211	ALUMINUM
500	900	4000	5811/12US	ANTI-FRICTION	9100	5008TCAL11E-C	70	94.1	12	MXTAAM	$132,618	COPPER
500	900	4000	T5012L	ANTI-FRICTION	5500	F5008WLF3I-C	75	93.9	11, 12	MXTAAM	$136,477	COPPER
500	900	4000	T5012L	SLEEVE	5000	F5008WLFLI-C	75	93.9	11, 12	MXTAAM	$151,977	COPPER
600	3600	4000	T5010H	ANTI-FRICTION	5000	F6003WLF3I-C	79	94.3	4, 11, 12	MXTAAM	$108,777	COPPER
600	3600	4000	T5010H	SLEEVE	5000	F6003WLFLI-C	79	94.1	4, 11, 12	MXTAAM	$124,277	COPPER
600	1800	4000	T5010L	ANTI-FRICTION	5000	F6004WLF3I-C	75	93.4	11, 12	MXTAAM	$123,575	COPPER
600	1800	4000	T5010L	SLEEVE	5000	F6004WLFLI-C	75	93.4	11, 12	MXTAAM	$139,075	COPPER
600	1200	4000	5811/12US	ANTI-FRICTION	9100	6006TCAL11E-A	85	93.6		MXTAAM	$110,757	ALUMINUM
600	1200	4000	5811/12US	ANTI-FRICTION	9100	6006TCAL11E-C	80	94.1	12	MXTAAM	$134,163	COPPER
600	1200	4000	T5010L	ANTI-FRICTION	5000	F6006WLF3I-C	93	94.2	11, 12	MXTAAM	$127,650	COPPER
600	1200	4000	T5010L	SLEEVE	5000	F6006WLFLI-C	93	94.2	11, 12	MXTAAM	$143,150	COPPER
600	900	4000	5811/12US	ANTI-FRICTION	9100	6008TCAL11E-A	89	93.6		MXTAAM	$111,191	ALUMINUM
600	900	4000	5811/12US	ANTI-FRICTION	9100	6008TCAL11E-C	83	94.1	12	MXTAAM	$134,599	COPPER
700	3600	4000	5811/12USS	ANTI-FRICTION	9100	7003TCAL11F-A	89	94.5	4	MXTAAM	$93,727	ALUMINUM
700	3600	4000	5811/12USS	ANTI-FRICTION	9100	7003TCAL11F-C	87	95	4, 12	MXTAAM	$117,134	COPPER
700	3600	4000	5811/12USS	SLEEVE	9100	7003TCQL11F-A	89	93.6	4, 10	MXTAAM	$112,045	ALUMINUM
700	3600	4000	5811/12USS	SLEEVE	9100	7003TCQL11F-C	87	94.1	4, 10, 12	MXTAAM	$135,452	COPPER
700	3600	4000	T5010H	ANTI-FRICTION	5000	F7003WLF3I-C	91	94.2	4, 11, 12	MXTAAM	$109,640	COPPER
700	3600	4000	T5010H	SLEEVE	5000	F7003WLFLI-C	91	94.2	4, 11, 12	MXTAAM	$150,952	COPPER
700	1800	4000	5811/12US	ANTI-FRICTION	9100	7005TCAL11E-A	90	94.5	4	MXTAAM	$106,495	ALUMINUM
700	1800	4000	5811/12US	ANTI-FRICTION	9100	7005TCAL11E-C	89	94.5	4, 12	MXTAAM	$129,902	COPPER
700	1800	4000	5811/12US	SLEEVE	9100	7005TCQL11E-A	90	94.5	4, 10	MXTAAM	$124,813	ALUMINUM
700	1800	4000	5811/12US	SLEEVE	9100	7005TCQL11E-C	89	94.5	4, 10, 12	MXTAAM	$148,221	COPPER
700	1800	4000	T5010L	ANTI-FRICTION	5000	F7004WLF3I-C	95	93.9	11, 12	MXTAAM	$128,685	COPPER
700	1800	4000	T5010L	SLEEVE	5000	F7004WLFLI-C	95	93.9	11, 12	MXTAAM	$144,185	COPPER
700	1200	4000	5811/12US	ANTI-FRICTION	9100	7006TCAL11E-A	100	93.6		MXTAAM	$115,868	ALUMINUM
700	1200	4000	5811/12US	ANTI-FRICTION	9100	7006TCAL11E-C	93	94.1	12	MXTAAM	$139,275	COPPER
700	1200	4000	6810/11/12US	ANTI-FRICTION	15000	7007TCAL11E-CF	95	94.5	4, 12	MXTAAM	$197,664	COPPER
700	1200	4000	6810/11/12US	SLEEVE	15500	7007TCQL11E-CF	95	94.5	4, 10, 12	MXTAAM	$209,478	COPPER
700	900	4000	T5012L	ANTI-FRICTION	5500	F7008WLF3I-C	99	94.9	11, 12	MXTAAM	$139,640	COPPER
700	900	4000	T5012L	SLEEVE	5000	F7008WLFLI-C	99	94.9	11, 12	MXTAAM	$155,140	COPPER
800	3600	4000	5811/12USS	ANTI-FRICTION	9100	8003TCAL11F-A	101	95	4	MXTAAM	$96,376	ALUMINUM
800	3600	4000	5811/12USS	ANTI-FRICTION	9100	8003TCAL11F-C	99	95.4	4, 12	MXTAAM	$119,782	COPPER
800	3600	4000	5811/12USS	SLEEVE	9100	8003TCQL11F-A	101	94.1	4, 10	MXTAAM	$114,694	ALUMINUM
800	3600	4000	5811/12USS	SLEEVE	9100	8003TCQL11F-C	99	94.5	4, 10, 12	MXTAAM	$138,101	COPPER
800	3600	4000	T5010H	ANTI-FRICTION	5000	F8003WLF3I-C	99	95.6	4, 11, 12	MXTAAM	$112,312	COPPER
800	3600	4000	T5010H	SLEEVE	5000	F8003WLFLI-C	99	95.6	4, 11, 12	MXTAAM	$127,812	COPPER
800	1800	4000	5811/12US	ANTI-FRICTION	9100	8005TCAL11E-A	105	94.5	4	MXTAAM	$108,207	ALUMINUM
800	1800	4000	5811/12US	ANTI-FRICTION	9100	8005TCAL11E-C	101	95	4, 12	MXTAAM	$131,614	COPPER
800	1800	4000	5811/12US	SLEEVE	9100	8005TCQL11E-A	105	94.5	4, 10	MXTAAM	$126,525	ALUMINUM
800	1800	4000	5811/12US	SLEEVE	9100	8005TCQL11E-C	101	95	4, 10, 12	MXTAAM	$149,933	COPPER
800	1800	4000	T5010L	ANTI-FRICTION	5000	F8004WLF3I-C	107	93.5	11, 12	MXTAAM	$132,472	COPPER
800	1800	4000	T5010L	SLEEVE	5000	F8004WLFLI-C	107	93.5	11, 12	MXTAAM	$147,972	COPPER
800	1200	4000	6810/11/12US	ANTI-FRICTION	15000	8007TCAL11E-C	108	94.5	4, 12	MXTAAM	$201,360	COPPER
800	1200	4000	6810/11/12US	SLEEVE	15500	8007TCQL11E-C	108	94.5	4, 10, 12	MXTAAM	$214,740	COPPER
800	1200	4000	T6808L	ANTI-FRICTION	6400	F8006WLF3I-C	108	94.8	11, 12	MXTAAM	$202,480	COPPER
800	1200	4000	T6808L	SLEEVE	9700	F8006WLFLI-C	108	94.8	11, 12	MXTAAM	$217,980	COPPER

Totally Enclosed

Totally Enclosed Air-Air Cooled (TEAAC) High Efficiency

HP	Speed (RPM)	Volts	Frame	Bearing	Weight (lbs.)	Model Number	FL Amps	Nominal FL EFF	Notes	Discount Symbol	List Price	Rotor Construction
800	900	4000	T6808L	ANTI-FRICTION	6400	F8008WLF3I-C	108	94.9	11, 12	MXTAAM	$224,360	COPPER
800	900	4000	T6808L	SLEEVE	9700	F8008WLFLI-C	108	94.9	11, 12	MXTAAM	$239,860	COPPER
900	3600	4000	5811/12USS	ANTI-FRICTION	9100	9003TCAL11F-A	113	95	4	MXTAAM	$103,535	ALUMINUM
900	3600	4000	5811/12USS	ANTI-FRICTION	9100	9003TCAL11F-C	111	95.4	4, 12	MXTAAM	$126,942	COPPER
900	3600	4000	5811/12USS	SLEEVE	9100	9003TCQL11F-A	113	94.5	4, 10	MXTAAM	$121,854	ALUMINUM
900	3600	4000	5811/12USS	SLEEVE	9100	9003TCQL11F-C	111	94.5	4, 10, 12	MXTAAM	$145,260	COPPER
900	3600	4000	T5012H	ANTI-FRICTION	5500	F9003WLF3I-C	110	95.8	4, 11, 12	MXTAAM	$115,824	COPPER
900	3600	4000	T5012H	SLEEVE	5000	F9003WLFLI-C	110	95.8	4, 11, 12	MXTAAM	$131,324	COPPER
900	1800	4000	5811/12US	ANTI-FRICTION	9100	9005TCAL11E-A	115	95	4	MXTAAM	$109,767	ALUMINUM
900	1800	4000	5811/12US	ANTI-FRICTION	9100	9005TCAL11E-C	114	95	4, 12	MXTAAM	$133,174	COPPER
900	1800	4000	5811/12US	SLEEVE	9100	9005TCQL11E-A	115	95	4, 10	MXTAAM	$128,085	ALUMINUM
900	1800	4000	5811/12US	SLEEVE	9100	9005TCQL11E-C	114	95	4, 10, 12	MXTAAM	$151,493	COPPER
900	1800	4000	T5012L	ANTI-FRICTION	5500	F9004WLF3I-C	117	95.6	11, 12	MXTAAM	$135,508	COPPER
900	1800	4000	T5012L	SLEEVE	5000	F9004WLFLI-C	117	95.6	11, 12	MXTAAM	$151,008	COPPER
900	1200	4000	6810/11/12US	ANTI-FRICTION	15000	9007TCAL11E-C	122	94.5	4, 12	MXTAAM	$204,450	COPPER
900	1200	4000	6810/11/12US	SLEEVE	15500	9007TCQL11E-C	122	94.5	4, 10, 12	MXTAAM	$218,360	COPPER
900	1200	4000	T6808L	ANTI-FRICTION	6400	F9006WLF3I-C	124	94.5	11, 12	MXTAAM	$205,699	COPPER
900	1200	4000	T6808L	SLEEVE	9700	F9006WLFLI-C	124	94.5	11, 12	MXTAAM	$221,199	COPPER
900	900	4000	T6810L	ANTI-FRICTION	8200	F9008WLF3I-C	121	95	11, 12	MXTAAM	$229,587	COPPER
900	900	4000	T6810L	SLEEVE	9700	F9008WLFLI-C	121	95	11, 12	MXTAAM	$245,087	COPPER
1000	3600	4000	5811/12USS	ANTI-FRICTION	9100	M203TCAL11F-A	125	95.4	4	MXTAAM	$117,844	ALUMINUM
1000	3600	4000	5811/12USS	ANTI-FRICTION	9100	M203TCAL11F-C	122	95.8	4, 12	MXTAAM	$141,252	COPPER
1000	3600	4000	5811/12USS	SLEEVE	9100	M203TCQL11F-A	125	94.5	4, 10	MXTAAM	$136,163	ALUMINUM
1000	3600	4000	5811/12USS	SLEEVE	9100	M203TCQL11F-C	122	95	4, 10, 12	MXTAAM	$159,570	COPPER
1000	3600	4000	T5012H	ANTI-FRICTION	5500	F10003WLF3I-C	122	96	4, 11, 12	MXTAAM	$118,680	COPPER
1000	3600	4000	T5012H	SLEEVE	5000	F10003WLFLI-C	122	96	4, 11, 12	MXTAAM	$134,180	COPPER
1000	1800	4000	5811/12US	ANTI-FRICTION	9100	M205TCAL11E-A	130	95	4	MXTAAM	$122,315	ALUMINUM
1000	1800	4000	5811/12US	ANTI-FRICTION	9100	M205TCAL11E-C	127	95.4	4, 12	MXTAAM	$145,721	COPPER
1000	1800	4000	5811/12US	SLEEVE	9100	M205TCQL11E-A	130	95	4, 10	MXTAAM	$140,633	ALUMINUM
1000	1800	4000	5811/12US	SLEEVE	9100	M205TCQL11E-C	127	95.4	4, 10, 12	MXTAAM	$164,040	COPPER
1000	1800	4000	T5012	SLEEVE	5000	F10004WLFLI-C	131	95.7	11, 12	MXTAAM	$159,880	COPPER
1000	1800	4000	T5012L	ANTI-FRICTION	5500	F10004WLF3I-C	131	95.7	11, 12	MXTAAM	$144,380	COPPER
1000	1200	4000	6810/11/12US	ANTI-FRICTION	15500	M207TCAL11E-C	CF	CF	4, 12	MXTAAM	CF	COPPER
1000	1200	4000	6810/11/12US	ANTI-FRICTION	15500	M207TCQL11E-C	CF	CF	4, 10, 12	MXTAAM	CF	COPPER
1000	900	4000	T6812L	ANTI-FRICTION	9700	F10008WLF3I-C	134	95.2	11, 12	MXTAAM	$236,470	COPPER
1000	900	4000	T6812L	SLEEVE	9700	F10008WLFLI-C	134	95.2	11, 12	MXTAAM	$251,970	COPPER
1250	3600	4000	5811/12USS	ANTI-FRICTION	9100	M253TCAL11F-A	155	95.8	3, 4, 14	MXTAAM	$124,562	ALUMINUM
1250	3600	4000	5811/12USS	ANTI-FRICTION	9100	M253TCAL11F-C	152	95.8	3, 4, 12, 14	MXTAAM	$147,968	COPPER
1250	3600	4000	5811/12USS	SLEEVE	9100	M253TCQL11F-A	155	95	3, 4, 10, 14	MXTAAM	$142,880	ALUMINUM
1250	3600	4000	5811/12USS	SLEEVE	9100	M253TCQL11F-C	152	95.4	3, 4, 10, 12, 14	MXTAAM	$166,287	COPPER
1250	3600	4000	6810/11/12USS	SLEEVE	15500	M253TCQL11F-CF	152	94.5	4, 10, 12	MXTAAM	$214,380	COPPER
1250	1800	4000	6810/11/12US	SLEEVE	15500	M255TCQL11E-CF	158	95.4	4, 12	MXTAAM	$213,960	COPPER
1250	1200	4000	6810/11/12US	ANTI-FRICTION	15000	M257TCAL11E-C	162	95	4, 12	MXTAAM	$256,302	COPPER
1250	1200	4000	6810/11/12US	SLEEVE	15500	M257TCQL11E-C	162	95	4, 10, 12	MXTAAM	$269,410	COPPER
1250	900	4000	T8808L	ANTI-FRICTION	12000	J1258WLF3I-C	169	95.3	11, 12	MXTAAM	$265,870	COPPER
1250	900	4000	T8808L	SLEEVE	15000	J1258WLFLI-C	169	95.3	11, 12	MXTAAM	$281,370	COPPER
1500	3600	4000	6810/11/12USS	SLEEVE	15500	M303TCQL11F-C	187	94.5	4, 10, 12	MXTAAM	$254,621	COPPER
1500	3600	4000	T6808H	SLEEVE	9700	J1503WLFLI-C	183	96.2	4, 11, 12	MXTAAM	$238,680	COPPER

Totally Enclosed

Totally Enclosed Air-Air Cooled (TEAAC) High Efficiency

HP	Speed (RPM)	Volts	Frame	Bearing	Weight (lbs.)	Model Number	FL Amps	Nominal FL EFF	Notes	Discount Symbol	List Price	Rotor Construction
1500	1800	4000	6810/11/12US	ANTI-FRICTION	15000	M305TCAL11E-C	189	95.4	4, 12	MXTAAM	$213,470	COPPER
1500	1800	4000	6810/11/12US	SLEEVE	15500	M305TCQL11E-C	189	95.4	4, 10, 12	MXTAAM	$228,640	COPPER
1500	1200	4000	6810/11/12US	ANTI-FRICTION	15000	M307TCAL11E-C	193	95	4, 12	MXTAAM	$258,360	COPPER
1500	1200	4000	6810/11/12US	SLEEVE	15500	M307TCQL11E-C	193	95	4, 10, 12	MXTAAM	$274,058	COPPER
1500	900	4000	T8808L	ANTI-FRICTION	12000	J1508WLF3I-C	205	95.4	11, 12	MXTAAM	$278,212	COPPER
1500	900	4000	T8808L	SLEEVE	15000	J1508WLFLI-C	205	95.4	11, 12	MXTAAM	$293,712	COPPER
1750	3600	4000	6810/11/12USS	SLEEVE	15500	M353TCQL11F-C	215	95	4, 10, 12	MXTAAM	$264,399	COPPER
1750	1800	4000	6810/11/12US	ANTI-FRICTION	15000	M355TCAL11E-C	219	95.4	4, 12	MXTAAM	$246,302	COPPER
1750	1800	4000	6810/11/12US	SLEEVE	15500	M355TCQL11E-C	219	95.4	4, 10, 12	MXTAAM	$258,604	COPPER
1750	1200	4000	6812/13US	ANTI-FRICTION	15000	M357TCAL11E-C	226	95	4, 12	MXTAAM	$262,380	COPPER
1750	1200	4000	6812/13US	SLEEVE	15500	M357TCQL11E-C	226	95	4, 10, 12	MXTAAM	$276,087	COPPER
1750	900	4000	R1083J	ANTI-FRICTION	18500	J1758WLF3I-C	245	95.4	11, 12	MXTAAM	$296,372	COPPER
1750	900	4000	R1083J	SLEEVE	18500	J1758WLFLI-C	245	95.4	11, 12	MXTAAM	$311,872	COPPER
2000	3600	4000	6812/13USS	SLEEVE	15500	M403TCQL11F-C	242	95	4, 10, 12	MXTAAM	$285,760	COPPER
2000	1800	4000	6810/11/12US	ANTI-FRICTION	15000	M405TCAL11E-C	250	95.8	4, 12	MXTAAM	$263,417	COPPER
2000	1800	4000	6810/11/12US	SLEEVE	15500	M405TCQL11E-C	250	95.8	4, 10, 12	MXTAAM	$278,005	COPPER
2000	1200	4000	T6812L	ANTI-FRICTION	9700	J2006WLF3I-C	250	95.3	11, 12	MXTAAM	$264,580	COPPER
2000	1200	4000	T6812L	SLEEVE	9700	J2006WLFLI-C	250	95.3	11, 12	MXTAAM	$280,080	COPPER
2000	900	4000	R1083J	ANTI-FRICTION	18500	J2008WLF3I-C	275	95.6	11, 12	MXTAAM	$298,660	COPPER
2000	900	4000	R1083J	SLEEVE	18500	J2008WLFLI-C	275	95.6	11, 12	MXTAAM	$314,160	COPPER
2250	3600	4000	6812/13US	SLEEVE	15500	M453TCQL11F-C	CF	CF	4, 10, 12	MXTAAM	CF	COPPER
2250	1800	4000	6810/11/12US	SLEEVE	15500	M455TCAL11E-C	CF	CF	4, 12	MXTAAM	CF	COPPER
2250	1800	4000	6810/11/12US	SLEEVE	15500	M455TCQL11E-C	CF	CF	4, 10, 12	MXTAAM	CF	COPPER
2250	1200	4000	T8808L	ANTI-FRICTION	CF	J2256WLF3I-C	CF	CF	11, 12	MXTAAM	CF	COPPER
2250	1200	4000	T8808L	SLEEVE	CF	J2256WLFLI-C	CF	CF	11, 12	MXTAAM	CF	COPPER
2250	900	4000	R1085E	ANTI-FRICTION	CF	J2258WLF3I-C	CF	CF	11, 12	MXTAAM	CF	COPPER
2250	900	4000	R1085E	SLEEVE	CF	J2258WLFLI-C	CF	CF	11, 12	MXTAAM	CF	COPPER
2500	3600	4000	450-1600	SLEEVE	16000	M503TCQL11F-C	300	95.4	4, 10, 12	MXTAAM	$309,480	COPPER
2500	1800	4000	6812/13US	ANTI-FRICTION	15000	M505TCAL11E-C	311	96.2	4, 12	MXTAAM	$291,227	COPPER
2500	1800	4000	6812/13US	SLEEVE	15500	M505TCQL11E-C	311	96.2	4, 10, 12	MXTAAM	$305,125	COPPER
2500	1200	4000	T8808L	ANTI-FRICTION	12000	J2506WLF3I-C	318	95.9	11, 12	MXTAAM	$286,941	COPPER
2500	1200	4000	T8808L	SLEEVE	15000	J2506WLFLI-C	318	95.9	11, 12	MXTAAM	$302,441	COPPER
2500	900	4000	R1085E	ANTI-FRICTION	20000	J2508WLF3I-C	345	95.7	11, 12	MXTAAM	$304,568	COPPER
2500	900	4000	R1085E	SLEEVE	20000	J2508WLFLI-C	345	95.7	11, 12	MXTAAM	$320,068	COPPER
3000	3600	4000	T8810H	SLEEVE	15000	J3003WLFLI-C	370	96.1	4, 11, 12	MXTAAM	$315,280	COPPER
3000	1800	4000	450-1600	ANTI-FRICTION	16000	M605TCAL11E-C	371	96.5	4, 12	MXTAAM	$306,470	COPPER
3000	1800	4000	450-1600	SLEEVE	16000	M605TCQL11E-C	371	96.5	4, 10, 12	MXTAAM	$324,708	COPPER
3000	1200	4000	R1083J	ANTI-FRICTION	18500	J3006WLF3I-C	385	95.9	11, 12	MXTAAM	$296,780	COPPER
3000	1200	4000	R1083J	SLEEVE	18500	J3006WLFLI-C	385	95.9	11, 12	MXTAAM	$318,230	COPPER
3000	900	4000	R1087J	ANTI-FRICTION	23500	J3008WLF3I-C	405	96.3	11, 12	MXTAAM	$308,412	COPPER
3000	900	4000	R1087J	SLEEVE	23500	J3008WLFLI-C	405	96.3	11, 12	MXTAAM	$329,862	COPPER
3500	3600	4000	T8810H	SLEEVE	15000	J3503WLFLI-C	431	96.2	4, 11, 12	MXTAAM	$324,760	COPPER
3500	1800	4000	T8810L	ANTI-FRICTION	15000	J3504WLF3I-C	431	96.6	11, 12	MXTAAM	$312,470	COPPER
3500	1800	4000	T8810L	SLEEVE	15000	J3504WLFLI-C	431	96.6	11, 12	MXTAAM	$333,920	COPPER
3500	1200	4000	R1085E	ANTI-FRICTION	20000	J3506WLF3I-C	450	96	11, 12	MXTAAM	$306,715	COPPER
3500	1200	4000	R1085E	SLEEVE	20000	J3506WLFLI-C	450	96	11, 12	MXTAAM	$328,165	COPPER
3500	900	4000	R1087E	ANTI-FRICTION	23500	J3508WLF3I-C	470	96.4	11, 12	MXTAAM	$314,690	COPPER
3500	900	4000	R1087E	SLEEVE	23500	J3508WLFLI-C	470	96.4	11, 12	MXTAAM	$336,140	COPPER

Totally Enclosed

Totally Enclosed Air-Air Cooled (TEAAC) High Efficiency

HP	Speed (RPM)	Volts	Frame	Bearing	Weight (lbs.)	Model Number	FL Amps	Nominal FL EFF	Notes	Discount Symbol	List Price	Rotor Construction
4000	3600	4000	T8810T	SLEEVE	15000	J4003WLFLI-C	495	96.5	4, 11, 12	MXTAAM	$328,673	COPPER
4000	1800	4000	T8810L	ANTI-FRICTION	15000	J4004WLF3I-C	495	96.6	11, 12	MXTAAM	$316,870	COPPER
4000	1800	4000	T8810L	SLEEVE	15000	J4004WLFLI-C	495	96.6	11, 12	MXTAAM	$338,320	COPPER
4000	1200	4000	R1087E	ANTI-FRICTION	23500	J4006WLF3I-C	510	96.7	11, 12	MXTAAM	$313,470	COPPER
4000	1200	4000	R1087E	SLEEVE	23500	J4006WLFLI-C	510	96.7	11, 12	MXTAAM	$334,920	COPPER
4000	900	4000	R1089E	ANTI-FRICTION	27500	J4008WLF3I-C	535	96.5	11, 12	MXTAAM	$318,690	COPPER
4000	900	4000	R1089E	SLEEVE	27500	J4008WLFLI-C	535	96.5	11, 12	MXTAAM	$340,140	COPPER
4500	1800	4000	R1085E	ANTI-FRICTION	20000	J4504WLF3I-C	575	97	11, 12	MXTAAM	$323,558	COPPER
4500	1800	4000	R1087E	SLEEVE	23500	J4504WLFLI-C	560	96.7	11, 12	MXTAAM	$345,008	COPPER
4500	1200	4000	R1087E	ANTI-FRICTION	23500	J4506WLF3I-C	570	96.8	11, 12	MXTAAM	$319,687	COPPER
4500	1200	4000	R1087E	SLEEVE	23500	J4506WLFLI-C	570	96.8	11, 12	MXTAAM	$341,137	COPPER
4500	900	4000	R1089E	ANTI-FRICTION	27500	J4508WLF3I-C	600	96.6	11, 12	MXTAAM	$325,805	COPPER
4500	900	4000	R1089E	SLEEVE	27500	J4508WLFLI-C	600	96.6	11, 12	MXTAAM	$347,255	COPPER
5000	1800	4000	R1087E	ANTI-FRICTION	23500	J5004WLF3I-C	620	96.8	11, 12	MXTAAM	$329,680	COPPER
5000	1800	4000	R1087E	SLEEVE	23500	J5004WLFLI-C	620	96.8	11, 12	MXTAAM	$351,130	COPPER
5000	1200	4000	R1089E	ANTI-FRICTION	27500	J5006WLF3I-C	635	96.8	11, 12	MXTAAM	$328,072	COPPER
5000	1200	4000	R1089E	SLEEVE	27500	J5006WLFLI-C	635	96.8	11, 12	MXTAAM	$349,522	COPPER
6000	1800	4000	R1087E	ANTI-FRICTION	23500	J6004WLF3I-C	700	96.5	11, 12	MXTAAM	$336,804	COPPER
6000	1800	4000	R1087E	SLEEVE	23500	J6004WLFLI-C	700	96.5	11, 12	MXTAAM	$358,254	COPPER
6000	1200	4000	R1089E	ANTI-FRICTION	27500	J6006WLF3I-C	721	96.4	11, 12	MXTAAM	$337,512	COPPER
6000	1200	4000	R1089E	SLEEVE	27500	J6006WLFLI-C	721	96.4	11, 12	MXTAAM	$358,962	COPPER
7000	1800	4000	R1089E	ANTI-FRICTION	27500	J7004WLF3I-C	815	96.6	11, 12	MXTAAM	$341,208	COPPER
7000	1800	4000	R1089E	SLEEVE	27500	J7004WLFLI-C	815	96.6	11, 12	MXTAAM	$362,658	COPPER
8000	1800	4000	R1089E	ANTI-FRICTION	27500	J8004WLF3I-C	958	96.8	11, 12	MXTAAM	$356,812	COPPER
8000	1800	4000	R1089E	SLEEVE	27500	J8004WLFLI-C	958	96.8	11, 12	MXTAAM	$378,262	COPPER

FL Amps and FL EFF are average expected design values and not guaranteed.
The weights listed above are estimated.
Please contact Toshiba for information on product availability.
"CF" = Consult Factory

Totally Enclosed

Totally Enclosed Water-Air Cooled (TEWAC)

High Efficiency

NEW PRODUCT

Toshiba's general purpose, medium voltage Totally Enclosed Water-to-Air Cooled motor offering includes a top hat design. Designed to meet the industry's ever-increasing need for improved energy conservation and product performance, this product line offers exceptionally high torque and a low vibration design, leading to longer life and greater reliability.

Toshiba's medium voltage motor offerings are completely customizable due to our in-house design, engineering, and manufacturing capabilities. This allows us to not only meet, but exceed your specific application requirements.

Product Scope:

Horsepower:	400 to 5500 HP
Speed (60 Hz):	3600, 1800, 1200, or 900 RPM*
Volt (60 Hz):	2300/4000 or 4000 V**
Enclosure:	Totally Enclosed Water-to-Air Cooled
Frame Size:	5012 through 450-1600
Construction:	Cast Iron Frame, End Brackets, & Main Terminal Box for 5012 & 5812 Frames; Fabricated Steel Main Box for 6800 & Larger
Insulation:	Class F with Class B Rise at 1.0 Service Factor by RM
Environment:	Suitable for Indoor or Outdoor

*Contact Toshiba for availability on lower speed designs
**Contact Toshiba for availability on 6000 and 13,200 V, 60 Hz motors

General Features:

- Winding RTDs (100 Ohm Platinum, Two per Phase) – Wired to an Auxiliary Box
- Space Heater (120 V, I, 60) – Wired to an Auxiliary Box
- Bearing RTD Provisions
- Insulated NDE Bearing for 5000 and 6800 Frames (for Anti-Friction Ball Bearing)
- Insulated Sleeve Bearings on Both Ends
- Carbon Steel Single Wall Material; Cooler with 90/10 Cu/Ni Tube Material
- High Pressure Die Cast Aluminum Rotor Up to 5812USS Frames
- Phosphorous Free Brazing Copper Bar Rotor for 6800 and Larger Frames
- Multi-Mount Frames:
  - 5011/12US
  - 5811/5812US (Option for 5810/12US)
  - 6810/11/12US
  - 6812/13US
- Industrial or Fresh Water Inlet for Water-Air Cooler

Special Features:

- Check MVM Modification Section for Other Options

HP	Speed (RPM)	Volts	Frame	Bearing	Weight (lbs.)	Model Number	FL Amps	Nominal FL EFF	Notes	Discount Symbol	List Price
400	3600	2300/4000	5011/12USS	ANTI-FRICTION	5500	4003TWAK11F-A	94/54	93.6	4	MXTWAC	$71,142
400	3600	2300/4000	5011/12USS	ANTI-FRICTION	5500	4003TWAK11F-C	94/54	92.4	4, 12	MXTWAC	$94,308
400	3600	2300/4000	5011/12USS	SLEEVE	5500	4003TWQK11F-A	94/54	93	4, 10	MXTWAC	$87,882
400	3600	2300/4000	5011/12USS	SLEEVE	5500	4003TWQK11F-C	94/54	93	4, 10, 12	MXTWAC	$111,048
400	1800	2300/4000	5011/12US	ANTI-FRICTION	5500	4004TWAK11E-A	94/54	92.4		MXTWAC	$73,857
400	1800	2300/4000	5011/12US	ANTI-FRICTION	5500	4004TWAK11E-C	89/51	92.4	12	MXTWAC	$92,817
400	1200	2300/4000	5011/12US	ANTI-FRICTION	5500	4006TWAK11E-A	97/56	92.4		MXTWAC	$84,137

Totally Enclosed

Totally Enclosed Water-Air Cooled (TEWAC) High Efficiency

HP	Speed (RPM)	Volts	Frame	Bearing	Weight (lbs.)	Model Number	FL Amps	Nominal FL EFF	Notes	Discount Symbol	List Price
400	1200	2300/4000	5011/12US	ANTI-FRICTION	5500	4006TWAK11E-C	103/60	93.6	12	MXTWAC	$105,587
400	900	4000	5811/12US	ANTI-FRICTION	7800	4008TWAL11E-A	60	94.1		MXTWAC	$90,960
400	900	4000	5811/12US	ANTI-FRICTION	7800	4008TWAL11E-C	60	94.1	12	MXTWAC	$116,240
450	3600	2300/4000	5011/12USS	ANTI-FRICTION	5500	4503TWAK11F-A	104/60	94.1	4	MXTWAC	$72,309
450	3600	2300/4000	5011/12USS	ANTI-FRICTION	5500	4503TWAK11F-C	104/60	93	4, 12	MXTWAC	$95,475
450	3600	2300/4000	5011/12USS	SLEEVE	5500	4503TWQK11F-A	104/60	93.6	4, 10	MXTWAC	$89,049
450	3600	2300/4000	5011/12USS	SLEEVE	5500	4503TWQK11F-C	104/60	93.6	4, 10, 12	MXTWAC	$112,215
450	1800	2300/4000	5011/12US	ANTI-FRICTION	5500	4504TWAK11E-A	106/61	93		MXTWAC	$75,573
450	1800	2300/4000	5011/12US	ANTI-FRICTION	5500	4504TWAK11E-C	103/59	92.4	12	MXTWAC	$98,654
450	1200	2300/4000	5011/12US	ANTI-FRICTION	5500	4506TWAK11E-A	113/65	93		MXTWAC	$86,050
450	1200	2300/4000	5011/12US	ANTI-FRICTION	5500	4506TWAK11E-C	116/67	94.1	12	MXTWAC	$109,131
450	900	4000	5811/12US	ANTI-FRICTION	7800	4508TWAL11E-A	66	93.6		MXTWAC	$93,929
450	900	4000	5811/12US	ANTI-FRICTION	7800	4508TWAL11E-C	61	94.1	12	MXTWAC	$119,208
500	3600	2300/4000	5011/12USS	ANTI-FRICTION	5500	5003TWAK11F-A	114/66	93.6	4	MXTWAC	$74,744
500	3600	2300/4000	5011/12USS	ANTI-FRICTION	5500	5003TWAK11F-C	114/66	93	4, 12	MXTWAC	$97,910
500	3600	2300/4000	5011/12USS	SLEEVE	5500	5003TWQK11F-A	114/66	93.6	4, 10	MXTWAC	$91,484
500	3600	2300/4000	5011/12USS	SLEEVE	5500	5003TWQK11F-C	114/66	93.6	4, 10, 12	MXTWAC	$114,650
500	1800	2300/4000	5011/12US	ANTI-FRICTION	5500	5004TWAK11E-A	114/66	93		MXTWAC	$77,986
500	1800	2300/4000	5011/12US	ANTI-FRICTION	5500	5004TWAK11E-C	112/65	92.4	12	MXTWAC	$101,068
500	1200	2300/4000	5011/12US	ANTI-FRICTION	5500	5006TWAK11E-A	126/73	93		MXTWAC	$89,836
500	1200	2300/4000	5011/12US	ANTI-FRICTION	5500	5006TWAK11E-C	130/75	94.1	12	MXTWAC	$112,917
500	900	4000	5811/12US	ANTI-FRICTION	7800	5008TWAL11E-A	69	94.5		MXTWAC	$96,684
500	900	4000	5811/12US	ANTI-FRICTION	7800	5008TWAL11E-C	75	93.6	12	MXTWAC	$121,964
600	3600	2300/4000	5011/12USS	ANTI-FRICTION	5500	6003TWAK11F-A	137/79	94.1	4	MXTWAC	$77,871
600	3600	2300/4000	5011/12USS	ANTI-FRICTION	5500	6003TWAK11F-C	137/79	93.6	4, 12	MXTWAC	$101,037
600	3600	2300/4000	5011/12USS	SLEEVE	5500	6003TWQK11F-A	137/79	94.1	4, 10	MXTWAC	$94,611
600	3600	2300/4000	5011/12USS	SLEEVE	5500	6003TWQK11F-C	137/79	94.1	4, 10, 12	MXTWAC	$117,777
600	1800	2300/4000	5011/12US	ANTI-FRICTION	5500	6004TWAK11E-A	137/79	93		MXTWAC	$79,473
600	1800	2300/4000	5011/12US	ANTI-FRICTION	5500	6004TWAK11E-C	130/75	93	12	MXTWAC	$102,556
600	1200	4000	5811/12US	ANTI-FRICTION	7800	6006TWAL11E-A	86	93		MXTWAC	$96,194
600	1200	4000	5811/12US	ANTI-FRICTION	7800	6006TWAL11E-C	86	93	12	MXTWAC	$121,473
600	900	4000	5811/12US	ANTI-FRICTION	7800	6008TWAL11E-A	84	94.5		MXTWAC	$102,503
600	900	4000	5811/12US	ANTI-FRICTION	7800	6008TWAL11E-C	93	94.1	12	MXTWAC	$127,782
700	3600	2300/4000	5011/12USS	ANTI-FRICTION	5500	7003TWAK11F-A	159/92	94.1	4	MXTWAC	$83,462
700	3600	2300/4000	5011/12USS	ANTI-FRICTION	5500	7003TWAK11F-C	158/91	94.1	4, 12	MXTWAC	$106,628
700	3600	2300/4000	5011/12USS	SLEEVE	5500	7003TWQK11F-A	159/92	94.1	4, 10	MXTWAC	$100,202
700	3600	2300/4000	5011/12USS	SLEEVE	5500	7003TWQK11F-C	158/91	94.1	4, 10, 12	MXTWAC	$123,368
700	3600	4000	5811/12USS	ANTI-FRICTION	7800	7003TWAL11F-CF	89	94.5	4, 12	MXTWAC	$146,534
700	3600	4000	5811/12USS	SLEEVE	8000	7003TWQL11F-AF	88	94.5	4, 10	MXTWAC	$140,108
700	3600	4000	5811/12USS	SLEEVE	8000	7003TWQL11F-CF	89	94.5	4, 10, 12	MXTWAC	$186,440
700	3600	4000	5811/12USS	ANTI-FRICTION	7800	7003TWAL11F-AF	CF	CF	4	MXTWAC	CF
700	1800	2300/4000	5011/12US	ANTI-FRICTION	5500	7004TWAK11E-A	165/95	93.6		MXTWAC	$85,105
700	1800	2300/4000	5011/12US	ANTI-FRICTION	5500	7004TWAK11E-C	151/87	93.6	12	MXTWAC	$108,186
700	1200	4000	5811/12US	ANTI-FRICTION	7800	7006TWAL11E-A	94	94.1		MXTWAC	$97,180
700	1200	4000	5811/12US	ANTI-FRICTION	7800	7006TWAL11E-C	100	94.5	12	MXTWAC	$122,460
700	900	4000	5811/12US	ANTI-FRICTION	7800	7008TWAL11E-A	99	94.5		MXTWAC	$105,379
700	900	4000	5811/12US	ANTI-FRICTION	7800	7008TWAL11E-C	108	94.1	12	MXTWAC	$130,659
800	3600	2300/4000	5011/12USS	ANTI-FRICTION	5500	8003TWAK11F-A	182/105	94	4	MXTWAC	$87,054

Totally Enclosed

Totally Enclosed
Water-Air Cooled (TEWAC)
High Efficiency

HP	Speed (RPM)	Volts	Frame	Bearing	Weight (lbs.)	Model Number	FL Amps	Nominal FL EFF	Notes	Discount Symbol	List Price
800	3600	2300/4000	5011/12USS	ANTI-FRICTION	5500	8003TWAK11F-C	178/103	94	4, 12	MXTWAC	$110,220
800	3600	2300/4000	5011/12USS	SLEEVE	5500	8003TWQK11F-A	182/105	94	4, 10	MXTWAC	$103,794
800	3600	2300/4000	5011/12USS	SLEEVE	5500	8003TWQK11F-C	175/101	94.9	4, 10, 12	MXTWAC	$126,960
800	3600	4000	5811/12USS	ANTI-FRICTION	7800	8003TWAL11F-AF	102	95.2	4	MXTWAC	$91,412
800	3600	4000	5811/12USS	SLEEVE	8000	8003TWQL11F-CF	CF	CF	4, 10, 12	MXTWAC	CF
800	1800	2300/4000	5011/12US	ANTI-FRICTION	5500	8004TWAK11E-A	185/107	93.5		MXTWAC	$89,111
800	1800	2300/4000	5011/12US	ANTI-FRICTION	5500	8004TWAK11E-C	185/107	93.5	12	MXTWAC	$110,135
800	1800	4000	5811/12US	SLEEVE	8000	8004TWQL11E-A	107	93	10	MXTWAC	$105,851
800	1800	4000	5811/12US	SLEEVE	8000	8004TWQL11E-C	108	93.6	10, 12	MXTWAC	$129,017
800	1200	4000	5811/12US	ANTI-FRICTION	7800	8006TWAL11E-A	103	94.5		MXTWAC	$106,721
800	1200	4000	5811/12US	ANTI-FRICTION	7800	8006TWAL11E-C	108	93.6	12	MXTWAC	$131,999
800	900	4000	5811/12US	ANTI-FRICTION	7800	8008TWAL11E-C	103	94.5	12	MXTWAC	$209,345
800	900	4000	5811/12US	SLEEVE	8000	8008TWQL11E-C	108	94.5	10, 12	MXTWAC	$225,816
900	3600	4000	5811/12USS	ANTI-FRICTION	7800	9003TWAL11F-A	114	95.4	4	MXTWAC	$98,318
900	3600	4000	5811/12USS	ANTI-FRICTION	7800	9003TWAL11F-C	110	95.8	4, 12	MXTWAC	$121,484
900	3600	4000	5811/12USS	SLEEVE	8000	9003TWQL11F-A	114	95.3	4, 10	MXTWAC	$115,058
900	3600	4000	5811/12USS	SLEEVE	8000	9003TWQL11F-C	110	95.7	4, 10, 12	MXTWAC	$138,224
900	1800	4000	5811/12US	ANTI-FRICTION	7800	9005TWAL11E-A	110	95.4	4	MXTWAC	$101,193
900	1800	4000	5811/12US	ANTI-FRICTION	7800	9005TWAL11E-C	114	95	4, 12	MXTWAC	$124,359
900	1800	4000	5811/12US	SLEEVE	8000	9005TWQL11E-A	110	95.4	4, 10	MXTWAC	$117,933
900	1800	4000	5811/12US	SLEEVE	8000	9005TWQL11E-C	114	95.4	4, 10, 12	MXTWAC	$141,099
900	1200	4000	5811/12US	ANTI-FRICTION	7800	9006TWAL11E-A	117	95.4		MXTWAC	$109,316
900	1200	4000	5811/12US	ANTI-FRICTION	7800	9006TWAL11E-C	114	95.4	12	MXTWAC	$132,482
900	900	4000	5811/12US	ANTI-FRICTION	7800	9008TWAL11E-C	117	95.4	12	MXTWAC	$218,943
900	900	4000	5811/12US	SLEEVE	8000	9008TWQL11E-C	125	94.5	10, 12	MXTWAC	$235,414
1000	3600	2300/4000	5011/12USS	SLEEVE	5500	M203TWQK11F-CF	222/128	94.7	4, 10, 12	MXTWAC	$132,343
1000	3600	4000	5811/12USS	ANTI-FRICTION	7800	M203TWAL11F-A	126	95.4	4	MXTWAC	$103,769
1000	3600	4000	5811/12USS	ANTI-FRICTION	7800	M203TWAL11F-C	122	95.8	4, 12	MXTWAC	$126,935
1000	3600	4000	5811/12USS	SLEEVE	8000	M203TWQL11F-A	126	95.4	4, 10	MXTWAC	$120,509
1000	3600	4000	5811/12USS	SLEEVE	8000	M203TWQL11F-C	122	95.8	4, 10, 12	MXTWAC	$160,415
1000	1800	4000	5811/12USS	ANTI-FRICTION	7800	M205TWAL11E-A	122	95.8	4	MXTWAC	$105,445
1000	1800	4000	5811/12US	ANTI-FRICTION	7800	M205TWAL11E-C	126	95.4	4, 12	MXTWAC	$128,611
1000	1800	4000	5811/12US	SLEEVE	8000	M205TWQL11E-A	131	95.4	4, 10	MXTWAC	$122,185
1000	1800	4000	5811/12US	SLEEVE	8000	M205TWQL11E-C	126	95.4	4, 10, 12	MXTWAC	$145,351
1000	1200	4000	5811/12US	ANTI-FRICTION	7800	M206TWAL11E-A	131	95.4		MXTWAC	$112,370
1000	1200	4000	5811/12US	ANTI-FRICTION	7800	M206TWAL11E-C	137	94.5	12	MXTWAC	$135,536
1000	900	4000	5811/12US	ANTI-FRICTION	7800	M208TWAL11E-C	135	94.5	12	MXTWAC	$229,733
1000	900	4000	6812/13US	SLEEVE	15000	M208TWQL11E-C	134	95	10, 12	MXTWAC	$246,204
1250	3600	4000	5811/12USS	ANTI-FRICTION	7800	M253TWAL11F-A	158	95.4	4	MXTWAC	$108,332
1250	3600	4000	5811/12USS	ANTI-FRICTION	7800	M253TWAL11F-C	153	95.8	4, 12	MXTWAC	$131,498
1250	3600	4000	5811/12USS	SLEEVE	8000	M253TWQL11F-A	158	95.4	4, 10	MXTWAC	$125,072
1250	3600	4000	5811/12USS	SLEEVE	8000	M253TWQL11F-C	153	95.8	4, 10, 12	MXTWAC	$164,978
1250	1800	4000	5811/12US	ANTI-FRICTION	7800	M255TWAL11E-A	157	95.4	4	MXTWAC	$112,788
1250	1800	4000	5811/12US	ANTI-FRICTION	7800	M255TWAL11E-C	162	95.8	4, 12	MXTWAC	$135,954
1250	1800	4000	5811/12US	SLEEVE	8000	M255TWQL11E-A	157	95.4	4, 10	MXTWAC	$129,528
1250	1800	4000	5811/12US	SLEEVE	8000	M255TWQL11E-C	162	95.8	4, 10, 12	MXTWAC	$152,694
1250	1200	4000	6810/11/12US	ANTI-FRICTION	14500	M257TWAL11E-C	157	94.5	4, 12	MXTWAC	$237,152
1250	1200	4000	6810/11/12US	SLEEVE	15000	M257TWQL11E-C	157	94.5	4, 10, 12	MXTWAC	$253,623

Totally Enclosed

Totally Enclosed Water-Air Cooled (TEWAC) High Efficiency

HP	Speed (RPM)	Volts	Frame	Bearing	Weight (lbs.)	Model Number	FL Amps	Nominal FL EFF	Notes	Discount Symbol	List Price
1250	900	4000	6812/13US	ANTI-FRICTION	14500	M258TWAL11E-C	169	95	12	MXTWAC	$243,170
1250	900	4000	6812/13US	SLEEVE	15000	M258TWQL11E-C	169	95	10, 12	MXTWAC	$259,641
1500	3600	4000	5811/12USS	ANTI-FRICTION	7800	M303TWAL11F-A	189	95.4	4	MXTWAC	$113,776
1500	3600	4000	5811/12USS	ANTI-FRICTION	7800	M303TWAL11F-C	183	95.8	4, 12	MXTWAC	$136,942
1500	3600	4000	5811/12USS	SLEEVE	8000	M303TWQL11F-A	189	95.4	4, 10	MXTWAC	$130,516
1500	3600	4000	5811/12USS	SLEEVE	8000	M303TWQL11F-C	183	95.8	4, 10, 12	MXTWAC	$170,422
1500	1800	4000	5811/12US	ANTI-FRICTION	7800	M305TWAL11E-A	189	95.4	4	MXTWAC	$116,701
1500	1800	4000	5811/12US	ANTI-FRICTION	7800	M305TWAL11E-C	193	95.8	4, 12	MXTWAC	$139,867
1500	1800	4000	5811/12US	SLEEVE	8000	M305TWQL11E-A	189	95.4	4, 10	MXTWAC	$133,441
1500	1800	4000	5811/12US	SLEEVE	8000	M305TWQL11E-C	193	95.8	4, 10, 12	MXTWAC	$156,607
1500	1200	4000	6810/11/12US	ANTI-FRICTION	14500	M307TWAL11E-C	196	95	4, 12	MXTWAC	$243,972
1500	1200	4000	6810/11/12US	SLEEVE	15000	M307TWQL11E-C	196	95	4, 10, 12	MXTWAC	$260,443
1500	900	4000	6812/13US	ANTI-FRICTION	14500	M308TWAL11E-C	187	95	12	MXTWAC	$254,439
1500	900	4000	6812/13US	SLEEVE	15000	M308TWQL11E-C	187	95	10, 12	MXTWAC	$270,910
1750	3600	4000	5811/12USS	ANTI-FRICTION	7800	M353TWAL11F-A	224	95.8	4	MXTWAC	$117,953
1750	3600	4000	5811/12USS	ANTI-FRICTION	7800	M353TWAL11F-C	216	95.8	4, 12	MXTWAC	$141,119
1750	3600	4000	5811/12USS	SLEEVE	8000	M353TWQL11F-A	224	95.4	4, 10	MXTWAC	$134,693
1750	3600	4000	5811/12USS	SLEEVE	8000	M353TWQL11F-C	216	95.8	4, 10, 12	MXTWAC	$157,859
1750	1800	4000	6810/11/12US	ANTI-FRICTION	14500	M355TWAL11E-C	219	95.8	4, 12	MXTWAC	$243,871
1750	1800	4000	6810/11/12US	SLEEVE	15000	M355TWQL11E-C	219	95.8	4, 10, 12	MXTWAC	$267,037
1750	1200	4000	6810/11/12US	ANTI-FRICTION	14500	M357TWAL11E-C	218	95	4, 12	MXTWAC	$253,306
1750	1200	4000	6810/11/12US	SLEEVE	15000	M357TWQL11E-C	218	95	4, 10, 12	MXTWAC	$269,778
1750	900	4000	6812/13US	ANTI-FRICTION	14500	M358TWAL11E-C	245	95	12	MXTWAC	$298,357
2000	3600	4000	5811/12USS	SLEEVE	8000	M403TWQL11F-C	245	95.8	4, 10, 12	MXTWAC	$169,915
2000	3600	4000	6810/11/12USS	SLEEVE	15000	M403TWQL11F-CF	249	95	4, 10, 12	MXTWAC	$273,236
2000	1800	4000	6810/11/12US	ANTI-FRICTION	14500	M405TWAL11E-C	250	95.8	4, 12	MXTWAC	$251,215
2000	1800	4000	6810/11/12US	SLEEVE	15000	M405TWQL11E-C	250	95.8	4, 10, 12	MXTWAC	$274,381
2000	1200	4000	6810/11/12US	ANTI-FRICTION	14500	M407TWAL11E-C	250	95	4, 12	MXTWAC	$265,429
2000	1200	4000	6810/11/12US	SLEEVE	15000	M407TWQL11E-C	250	95	4, 10, 12	MXTWAC	$281,901
2250	3600	4000	6810/11/12USS	SLEEVE	15000	M453TWQL11F-C	279	95.4	4, 10, 12	MXTWAC	$295,219
2250	1800	4000	6810/11/12US	ANTI-FRICTION	14500	M455TWAL11E-C	278	95.8	4, 12	MXTWAC	$264,865
2250	1800	4000	6810/11/12US	SLEEVE	15000	M455TWQL11E-C	278	95.8	4, 10, 12	MXTWAC	$288,031
2250	1200	4000	6812/13US	ANTI-FRICTION	14500	M457TWAL11E-C	281	95.4	4, 12	MXTWAC	$277,743
2250	1200	4000	6812/13US	SLEEVE	15000	M457TWQL11E-C	281	95.4	4, 10, 12	MXTWAC	$300,909
2500	3600	4000	6810/11/12USS	SLEEVE	15000	M503TWQL11F-C	309	95.4	4, 12	MXTWAC	$309,957
2500	1800	4000	6810/11/12US	ANTI-FRICTION	14500	M505TWAL11E-C	309	96.2	4, 12	MXTWAC	$275,209
2500	1800	4000	6810/11/12US	SLEEVE	15000	M505TWQL11E-C	309	96.2	4, 10, 12	MXTWAC	$298,375
2500	1200	4000	6812/13US	ANTI-FRICTION	14500	M507TWAL11E-C	318	95.8	4, 12	MXTWAC	$290,692
2500	1200	4000	6812/13US	SLEEVE	15000	M507TWQL11E-C	318	95.8	4, 10, 12	MXTWAC	$313,858
2750	3600	4000	6810/11/12USS	SLEEVE	15000	M553TWQL11F-C	337	96.2	4, 10, 12	MXTWAC	$326,784
2750	1800	4000	6812/13US	ANTI-FRICTION	14500	M555TWAL11F-C	338	96.5	4, 12	MXTWAC	$288,923
2750	1800	4000	6812/13US	SLEEVE	15000	M555TWQL11F-C	338	96.5	4, 10, 12	MXTWAC	$312,089
2750	1200	4000	6812/13US	ANTI-FRICTION	14500	M557TWAL11F-C	368	95.8	4, 12	MXTWAC	$302,784
2750	1200	4000	6812/13US	SLEEVE	15000	M557TWQL11E-C	368	95.8	4, 10, 12	MXTWAC	$325,950
3000	3600	4000	6810/11/12USS	SLEEVE	15000	M603TWQL11F-C	370	95.8	4, 10, 12	MXTWAC	$340,911
3000	1800	4000	6812/13US	ANTI-FRICTION	14500	M605TWAL11E-C	369	96.5	4, 12	MXTWAC	$303,005
3000	1800	4000	6812/13US	SLEEVE	15000	M605TWQL11E-C	369	96.5	4, 10, 12	MXTWAC	$326,171
3500	3600	4000	6810/11/12USS	SLEEVE	15000	M703TWQL11F-C	431	96.2	4, 10, 12	MXTWAC	$355,167

Totally Enclosed

Totally Enclosed
Water-Air Cooled (TEWAC)
High Efficiency

HP	Speed (RPM)	Volts	Frame	Bearing	Weight (lbs.)	Model Number	FL Amps	Nominal FL EFF	Notes	Discount Symbol	List Price
3500	1800	4000	6812/13US	ANTI-FRICTION	14500	M705TWAL11E-C	431	96.5	4, 12	MXTWAC	$315,676
3500	1800	4000	6812/13US	SLEEVE	15000	M705TWQL11E-C	431	96.5	4, 10, 12	MXTWAC	$338,842
4000	3600	4000	6812/13USS	SLEEVE	15000	M803TWQL11F-C	495	96.5	4, 10, 12	MXTWAC	$363,614
4000	1800	4000	450-1600	ANTI-FRICTION	16000	M805TWAL11E-CF	509	97.1	4, 12	MXTWAC	$337,435
4000	1800	4000	450-1600	ANTI-FRICTION	16000	M805TWQL11E-CF	509	97.1	4, 12	MXTWAC	$360,601
4000	1800	4000	6812/13US	ANTI-FRICTION	14500	M805TWAL11E-C	495	96.5	4, 12	MXTWAC	$330,783
4000	1800	4000	6812/13US	SLEEVE	15000	M805TWQL11E-C	495	96.5	4, 10, 12	MXTWAC	$353,949
4500	3600	4000	6812/13USS	SLEEVE	15000	M903TWQL11F-C	553	96.2	4, 10, 12	MXTWAC	$376,535
4500	1800	4000	450-1600	ANTI-FRICTION	16000	M905TWAL11E-C	575	96.8	4, 12	MXTWAC	$354,483
4500	1800	4000	450-1600	SLEEVE	16000	M905TWQL11E-C	575	96.8	4, 10, 12	MXTWAC	$377,649
5000	3600	4000	450-1600	SLEEVE	16000	C203TWQL11F-C	603	96.8	4, 10, 12	MXTWAC	$384,328
5000	3600	4000	6812/13USS	SLEEVE	15000	C203TWQL11F-CF	603	96.8	4, 10, 12	MXTWAC	$380,388
5500	3600	4000	6812/13USS	SLEEVE	15000	C223TWQL11F-C	663	97	4, 10, 12	MXTWAC	$388,486

FL Amps and FL EFF are average expected design values and not guaranteed.
The weights listed above are estimated.
Please contact Toshiba for information on product availability.
"CF" = Consult Factory

Medium Voltage Modifications

Production Modifications

Altitude 178
Ambient Temperature 178
Balance/Vibration 178
Bearings 178
Insulated Bearings 178
Oil Sump Heaters 178
Roller Bearing for Belted Applications 178
Blowers 179
Conduit Box Modifications 179
Auxiliary Terminal Box 179
Main Box Construction 179
Remote-Mount Conduit Box 179
Couplings 179
Current Transformers 179
Differential Pressure Switch/Gauge 179
Direction of Rotation 179
Dowel Pin Provisions 180
Drains & Breathers 180
Breathers 180
Drains 180
Enclosures 180
Classified-Division 2/Zone 2 Locations 180
IP Enclosure Protection 180
Encoders 180
Export Crating 181
Fan Covers 181
Fans/Special 181
Filters 181
Flange-Mounting 181
Freight 181
Frequency 181
Grease Fittings 181
Grounding Provisions 181
External Grounding Pads on Motor Frame 181
Grounding Provisions to Motor Shaft 181
Hardware 181
Insulation Modifications 181
Internal Coating for Extreme Service Operation 181
Upgrade to Class H Insulation System 182
Additional VPI 182
Tropicalize/Fungus-Proof Windings 182
Leads Terminals 182
Burndy Lugs/Two-Hole Terminals 182
Load Inertia 182
Lubrication 182
Grease – High Temperature 182
Grease – Low Temperature 182
Oil – Low Temperature 182
Oil – Mist 182
Constant Level Oilers 183
Forced Lube Provisions (Sleeve Bearings Only) 183
Nameplates 183
Duplicate or Special Nameplates 183
Paint 183
Seals 183
Service Factor 183
Shafts 183
List Adders for Special Shafts 183
Shaft Grounding Provisions 184
Software: Engineering Data 184
Soleplates/Slide Rails/Shims 184
Space Heaters 184
Surge Protection 184
TEFC 840 Severe Duty Package 185
Testing 185
Thermal Protection 186
Thermocouples 186
Resistance Temperature Detectors (RTDs) 186
Thermostat 186
Thermostats (Klixons) 186
Torque 186
Vertical Jacking Provisions 187
Vibration Detectors 187
Vibration Monitoring Devices 187
Voltage 187

Discount Symbol: MMP002 – For Medium Voltage Motors

Modifications from this section should be added to the appropriate motor list price to generate a total list price for the motor. Apply the applicable discount/multiplier from discount symbol MMP002 to arrive at a net each price. This will be the production/modified multiplier associated with the account pricing.

Contact Toshiba for all other frames.

Altitude

Standard motors are built for operation up to 3,300 ft. (1,000 m) above sea level at a maximum ambient of 40°C within Class B rise limits when operated at rated horsepower.

Option		Over 3,300 ft.
Frames	440/500	Contact Toshiba
	5000/5800	
	680/6800/450	
	N6800–N8800*	
	1080/T8800	
	1400	

* Non-NAFTA frames

Special Notes:

- Altitudes over 3,300 ft. may affect frame size. Final frame size is subject to final design completion.

Ambient Temperature

Toshiba motors are designed to operate in an ambient temperature range between -20° and 40°C. For operation in temperatures above the standard, refer to the chart below.

Option		41° to 45°C	46° to 50°C	Below –20°C & Above 50°C
Frames	440/500	Contact Toshiba		
	5000/5800			
	680/6800/450			
	N6800–N8800*			
	1080/T8800			
	1400			

* Non-NAFTA frames

Special Notes:

- Ambient conditions may affect frame size. Final frame size is subject to final design completion.
- Sleeve bearings may require flood lubrication system for above 40°C ambient and below -25°C .
- At ambient temperatures of -40° through -26°C, oil sump heaters are recommended for motors with sleeve bearings. See Oil Sump Heaters adders.
- At ambient temperatures of -40° through -26°C, special low temperature grease is usually required for motors with anti-friction bearings. See "Lubrication" section for adders.

Balance/Vibration

All Toshiba motors are dynamically balanced and measured in accordance with NEMA MG1 standards unless otherwise specified by the design. Toshiba Motors have a standard vibration level of 0.12 inches/second (MV-840 Product have lower vibration levels – check 840 Section for more details). For vibration levels lower than the Toshiba standard, refer to the chart below.

Option		Precision Balance	Special Balance
Frames	440/500	Contact Toshiba	
	5000/5800		
	680/6800/450		
	N6800–N8800*		
	1080/T8800		
	1400		

* Non-NAFTA frames

Special Note:
Precision Balance:

- 0.10 inches/second for 2-pole
- 0.08 inches/second for 4-pole through 10-pole

Bearings

Special bearings and designs are available on a production basis for specific application requirements.

Insulated Bearings

Insulated bearings are typically used in applications where shaft current concerns exist. Insulating the bearings helps to prevent electrical arcing (bearing fluting) and potential premature bearing failure.

Option		Ball Bearings		Bearing Housing	
		NDE	DE	NDE	DE
Frames	440/500	$1,969	$1,969	N/A	N/A
	5000/5800	$2,130	$2,130	N/A	N/A
	680/6800/450	$2,460	$2,460	N/A	N/A
	N6800–N8800*	$2,850	$2,850	$3,222	$3,222
	1080/T8800	$3,480	$3,480	$3,478	$3,478
	1400	$3,940	$3,940	$3,598	$3,598

* Non-NAFTA frames

Special Notes:

- An insulated NDE bearing is included with Dura-Bull TX®, 5012, 5812, and 6800 frame motors for Anti-Friction designs.
- An insulated NDE bearing housing is included for N6800 thru N8810 , 1080 and 1400 frame offering
- DE insulated roller bearing is available upon request.
- Sleeve bearings are insulated on DE and NDE bearings on motors up to and including the 6800 frame.
- NEMA MG1 Part 31 suggests insulating the bearing(s) on all motors in 500 series frames and larger when inverter-fed. Toshiba recommends insulating the bearings when shaft voltage exceeds 300 mV, but it is up to the user to determine when insulated bearings are required, especially with the use of a non-Toshiba inverter-fed control.
- When insulated bearings are used on direct-coupled applications, the use of an insulated coupling and/or a shaft grounding brush is required in order to reduce the risk of driven equipment bearing damage. Please note that grounding brushes are not suitable for Division 2 environments.
- Insulated bearings are not available on angular contact bearing construction.
- If bearing thermal devices are required with insulated bearings, a special version of the thermal device will be required. Contact Toshiba for the availability and price of this thermal device.

Oil Sump Heaters

In ambient temperatures below -20°C, oil sump heaters are required for motors with sleeve bearings.

Option		Non-Hazardous Area	Hazardous Area
Frames	440/500	N/A	N/A
	5000/5800	$2,412	$5,420
	680/6800/450	$2,588	$5,855
	N6800–N8800*	$2,755	$6,433
	1080/T8800	$2,989	$6,898
	1400	$3,150	$7,340

* Non-NAFTA frames

Special Notes:

- This adder applies only to motors with self-cooled sleeve bearings.
- Oil sump heaters operate at 120 or 240 V (customer to specify voltage).

Roller Bearing for Belted Applications

Cylindrical roller bearings are used in motors where high radial loads are present (i.e. belted applications) for an improved L-10 bearing life.

Option		Roller Bearing
		DE (1)
Frames	440/500	$2,180
	5000/5800	$3,566
	680/6800/450	$3765
	N6800–N8800*	$3,765
	1080/T8800	N/A
	1400	N/A

(1) TEFC motors only

* Non-NAFTA frames

Special Notes:

- Roller bearing is available only on 1800 RPM and slower motors.
- Belted application requires full belting details and provided prior to order acceptance.
- 4142 shaft material will be provided for 6800 frame and smaller.

Blowers

The turndown capability of an inverter-fed Toshiba motor is a function of the product selected, and when turndown requirements exceed product capability, the use of an auxiliary blower is required. Contact Toshiba for help with determining whether a blower is required and for pricing.

The National Electrical Code 430.126 (b) mandates that motors with external force-ventilation have a form of thermal protection. See Thermal Protection section for the addition of thermal protection.

Conduit Box Modifications

The standard main conduit box on all Toshiba motors is located in the F1 position.

Auxiliary Terminal Box

Termination of protective or monitoring devices can be provided in a separate auxiliary box. Auxiliary box location is to be specified by the customer at time of order.

Option		304 SS	Aux. Cast Iron Box	Aux. Steel Box
Frames	440/500	$2,470	Standard	Contact Toshiba
	5000/5800	$2,470		
	680/6800/450	$2,470		
	N6800–N8800*	$2,644		
	1080/T8800	$2,839		
	1400	$2,985		

* Non-NAFTA frames

Special Notes:

- Auxiliary terminal cast iron box is provided as standard with stator RTD adder on all motors.
- Auxiliary terminal cast iron box is provided as standard with space heaters adders.
- Bearing RTDs are terminated at their own condulet as standard. Termination at auxiliary terminal box requires an adder. See Thermal Protection section.

Main Box Construction

Toshiba 5800 and smaller frame motors come standard with cast iron main box except for the following, which come with a fabricated steel main box:

1) 6800 and Larger Frames
2) All Motors with Surge Protection Accessories
3) All API Motor Offerings

Option		304 SS	NEMA Type II	Special Features
Frames	440/500	$9,850	$3,325	Contact Toshiba
	5000/5800	$10,345	$3,325	
	680/6800/450	$12,780	$3,440	
	N6800–N8800*	$13,330	$3,440	
	1080/T8800	$13,330	$3,680	
	1400	$13,330	$3,680	

* Non-NAFTA frames

Special Notes:

- A top mount main box (F3) is available on TEFC enclosure only.
- NEMA Type II main box comes with stand-offs and insulators.
- 6800 and 450 frames come standard with Type II box.

Remote-Mount Conduit Box

For applications requiring that the conduit box be located away from the motor, Toshiba is able to supply a remote-mount conduit box. The conduit box will be supplied with the main motor, but will arrive unfastened. The remote-mount conduit box includes a main terminal box and a threaded mounting plate. Contact Toshiba for prices.

Couplings

Couplings must be supplied finished, bored, balanced, and freight-allowed to Toshiba manufacturing plant. An incoming identification number must be obtained from Toshiba. The coupling must be shipped to arrive at the designated plants, at least six weeks prior to the order's acknowledged ship date and must include the manufacturer's mounting instructions.

Option		Customer-Supplied Sheave/Coupling
Frames	440/500	$1,500
	5000/5800	$2,750
	680/6800/450	$3,750
	N6800–N8800*	$3,940
	1080/T8800	$5,450
	1400	$5,650

* Non-NAFTA frames

Current Transformers

Toshiba offers window-type current transformers (one per phase). Both leads of each winding are inserted in opposite directions to measure any difference that would signify ground fault leakage.

Option		Differential CTs (One Per Phase)	Ammeter CT
Frames	440/500	$5,594	$1,731
	5000/5800	$5,594	$1,731
	680/6800/450	$5,594	$1,731
	N6800–N8800*	$6,220	$1,940
	1080/T8800	$6,379	$1,993
	1400	$6,379	$1,993

* Non-NAFTA frames

Special Notes:

- Price includes Type II main terminal box.
- Toshiba standard 50:5 current transformers will be provided unless otherwise specified by customer. Price is subject to change.
- Current transformer leads will be terminated in a separate auxiliary box.
- Ammeter CT – one per motor.

Differential Pressure Switch/Gauge

On a motor with air filters, a pressure switch is used to measure the pressure drop across the filter caused by clogging. Toshiba's standard differential pressure switch is the Dwyer Instruments Model No. 1950 series.

Option		Switch	Gauge
Frames	440/500	N/A	N/A
	5000/5800	$2,890	$2,640
	680/6800/450	$2,890	$2,640
	N6800–N8800*	N/A	N/A
	1080/T8800	$3,120	$2,960
	1400	$3,120	$2,960

* Non-NAFTA frames

Special Note:

- Differential pressure switches and gauges are available on WPII motors.

Direction of Rotation

At time of order, the customer must specify the direction of rotation for the motor. Toshiba standard is counter clockwise (CCW) as viewed from non-drive end (NDE) of the motor. Uni-directional arrow will be provided on all motors for phase sequence connection.

Dowel Pin Provisions

Dowel pin pilot holes will be provided on two diagonal feet. These are provided to ensure motor alignment is maintained after the motor is installed. This feature comes standard on Dura-Bull TX® motors.

Option		Two Per Motor	Special
Frames	440/500	$1,094	Contact Toshiba
	5000/5800	$1,313	
	680/6800/450	$1,313	
	N6800–N8800*	$1,524	
	1080/T8800	$1,690	
	1400	$1,690	

* Non-NAFTA frames

Drains & Breathers

All motors are provided with drain holes that are located at the lowest point on the motor.

Breathers

To request breather(s).

Option		Standard Breather Motor (3)	Stainless Breather (1)	Standard Breather Conduit Box (2)
Frames	440/500	$328	$438	$438
	5000/5800	$328	$438	$438
	680/6800/450	$328	$438	$438
	N6800–N8800*	$360	$472	$472
	1080/T8800	$410	$550	$490
	1400	$450	$620	$520

* Non-NAFTA frames

(1) MV-840 comes standard with SS304 frame breathers.
(2) Standard and stainless breathers are available for cast iron conduit boxes only.
(3) Frame breather plugs available for totally enclosed designs only.

Drains

For additional drain hole(s).

Option		Drain Hole Conduit Box	Stainless Drain Plug Conduit Box
Frames	440/500	$131	$328
	5000/5800	$131	$328
	680/6800/450	$131	$328
	N6800–N8800*	$182	$360
	1080/T8800	$182	$360
	1400	$182	$360

* Non-NAFTA frames

Special Notes:

- MV-840 comes standard with SS304 main conduit box drain plug.
- Conduit box drain holes are available on cast iron conduit boxes only.
- Stainless drain plugs will be 304 SS (316 SS available; contact Toshiba).

Enclosures

Classified-Division 2/Zone 2 Locations

Environmental/application conditions may require a special motor design and special labeling of the product to ensure proper protection and/or safety during use. If an environment and/or application has been identified as a Division 2 or Zone 2 location, Toshiba requires that a Class, Group, and Temperature code (T-code) be provided to ensure safe operation in the specified atmosphere.

Option		Class I, Div 2 (1)	Class II, Div 2 (2)
Frames	440/500	$2,970	$4,240
	5000/5800	$2,970	$4,373
	680/6800/450	$3,620	$4,650
	N6800–N8800*	$3,620	$5,430
	1080/T8800	$4,280	N/A
	1400	$4,280	N/A

* Non-NAFTA frames

(1) All medium voltage products are suitable for a T3 (200°C) T-code under a sinewave condition based on a 1.0 service factor. For T-code ratings below 200°C, contact Toshiba for product pricing and availability. Please contact Toshiba for applications utilizing ASD control. Please note that the NEC does not require the motor to be specifically nameplated with the area classification.
(2) Class II adder is available on totally enclosed fan cooled (TEFC) enclosure only.

Special Notes:

- Low temperature space heaters are included in the above adders.
- Consult Toshiba for CSA certification and any other.
- Suitability of Zone 2 application is based on the National Electric Code (NEC).

IP Enclosure Protection

This motor modification is necessary to meet IEC enclosure definition of IP55. Available on totally enclosed motors only.

Option		IP55
Frames	440/500	$3,958
	5000/5800	$4,038
	680/6800/450	$4,038
	N6800–N8800*	$5,120
	1080/T8800	$5,250
	1400	$5,414

* Non-NAFTA frames

Special Note:

- MV-840 Offering comes Standard with IP55 protection.

Encoders

Encoders regulate speed on motors linked to variable speed applications, and they are available either face-mounted or shaft-mounted. Toshiba's standard offering is a Dynapar HS35 (shaft-mount) or Avtron M3 (shaft-mount). All prices below are based on Pulse Per Revolution (PPR) of 1024 single-output and dual-channel (A & B) quadrature. Encoder type must be specified upon order.

Option		Dynapar HS35	Avtron M3	Special
Frames	440/500	$2,734	$3,820	Contact Toshiba
	5000/5800	$2,734	$3,820	
	680/6800/450	$2,734	$3,820	
	N6800–N8800*	$3,272	$4,410	
	1080/T8800	$3,272	$4,410	
	1400	$3,272	$4,410	

* Non-NAFTA frames

Export Crating

Toshiba provides packaging options for different shipping requirements. Options include commercial packaging (for common, below-deck transport on ships) and containerized shipping.

Option		Export Crating
Frames	440/500	$3,240
	5000/5800	$4,120
	680/6800/450	$4,970
	N6800–N8800*	Included
	1080/T8800	$5,450
	1400	$5,450

* Non-NAFTA frames

Fan Covers

Cast iron fan covers are available on totally enclosed motors up to 5811US. On TEFC and TEAAC motors larger than 5800 US, only fabricated steel covers are available.

Fans/Special

The standard material for fans on Toshiba motors is aluminum. Toshiba also offers other options for fan materials. Please contact Toshiba for availability and pricing.

Filters

Toshiba filters are 304 stainless steel with 70 micron filtration.

Option		Stainless Steel
Frames	440/500	N/A
	5000/5800	$1,804
	680/6800/450	$1,940
	N6800–N8800*	N/A
	1080/T8800	$3,410
	1400	$3,410

* Non-NAFTA frames

Special Notes:

- See separate adder for differential pressure switch.
- This adder applies to WPII motors only.
- Contact Toshiba for 10 micron option.

Flange-Mounting

Flange mounting is available only on motors with ball bearings and direct-coupled applications.

Option		Open Drip-Proof	Totally Enclosed Fan Cooled		Weather Protected
		D-Flange Footed	C-Face Footed	D-Flange Footed	D-Flange Footed
Frames	440/500	$2,297	$1,477	$2,297	N/A
	5000/5800	$2,734	$2,895	$3,411	$3,575 (2)
	680/6800/450	$2,950	N/A	$3,956	$4,134 (2)
	N6800–N8800*	N/A	N/A	N/A	N/A
	1080/T8800	N/A	N/A	N/A	N/A
	1400	N/A	N/A	N/A	N/A

* Non-NAFTA frames

(2) Only applicable to two-pole motors.

Special Notes:

- C-face option is not available for 500 frame ODP enclosure.
- Consult factory for frames above NEMA availability.

Freight

Toshiba freight terms are in accordance with Incoterms 2010 rules. Delivery terms for NAFTA Qualified motors are FCA Houston or Hamilton Ontario "TIC Factories". **Delivery terms for Non-NAFTA Qualified motors are DDP First Port of Entry for USA or Canada**. Please contact Toshiba for delivery terms to other countries.

Frequency

Contact Toshiba for special frequency offerings.

Grease Fittings

Standard hydraulic, Alemite/Zerk-type fittings are provided with motors with regreasable bearings. For special grease fittings and drains, contact Toshiba for pricing and availability.

Grounding Provisions

All motor frames have clamp-type grounding lug inside the main conduit box.

External Grounding Pads on Motor Frame

Apply the adder below for a copper ground pad with two holes mounted on the motor frame. When placing the order, the hole and tap size must be provided.

Option		Frame Grounding	
		One	Two
Frames	440/500	$1,641	$2,752
	5000/5800	$1,641	$2,752
	680/6800/450	$1,641	$2,752
	N6800–N8800*	$1,822	$2,944
	1080/T8800	$1,822	$2,944
	1400	$1,822	$2,944

* Non-NAFTA frames

1) MV-840 offering comes STD with one ½" Grounding lug on motor frame.

Grounding Provisions to Motor Shaft

See Shaft Grounding modifications section.

Hardware

Standard hardware is non-corrosive. Stainless hardware fasteners for holding brackets, conduit box, fan cover, and inner caps are available.

Option		304 SS Hardware	316 SS Hardware
Frames	440/500	$780	$936
	5000/5800	$780	$936
	680/6800/450	$1,094	$1,312
	N6800–N8800*	$1,244	$1,574
	1080/T8800	$1,244	$1,574
	1400	$1,244	$1,574

* Non-NAFTA frames

Special Note:

- This adder applies only to M10 size and smaller hardware.

Insulation Modifications

Standard motor insulation is Class F with epoxy resin-based VPI insulation system, except for N6800 through N8800 motors which use polyester resin-based insulation system.

Internal Coating for Extreme Service Operation

This adder provides additional insulation coating as well as corrosion protection for all internal machined surfaces.

Option		Internal Coating
Frames	440/500	$2,406
	5000/5800	$2,734
	680/6800/450	$2,970
	N6800–N8800*	$2,970
	1080/T8800	$3,149
	1400	$3,149

* Not NAFTA Qualified

Special Note:

- MV-840 offering comes STD with internal coating for severe duty application.

Upgrade to Class H Insulation System

Option		Class H
Frames	440/500	$7,340
	5000/5800	$8,180
	680/6800/450	$9,420
	N6800–N8800*	N/A
	1080/T8800	N/A
	1400	

* Non-NAFTA frames

Special Note:

- Subject to additional lead time.

Additional VPI

Improve a motor's insulation system by applying one additional VPI process.

Option		Additional VPI
Frames	440/500	$2,820
	5000/5800	$3,270
	680/6800/450	$3,520
	N6800–N8800*	$3,693
	1080/T8800	$4,120
	1400	$4,340

* Non-NAFTA frames

Tropicalize/Fungus-Proof Windings

Unwanted fungi may break down a motor's insulation system over time. The addition of the tropicalize/fungus-proof adder will protect motor windings from this type of problem.

Option		Tropicalize/Fungus-Proof Winding
Frames	440/500	$1,230
	5000/5800	$1,531
	680/6800/450	$1,820
	N6800–N8800*	$2,050
	1080/T8800	$2,230
	1400	$2,403

* Non-NAFTA frames

Special Notes:

- MV-840 offering comes standard with tropicalized winding.

Leads Terminals

All Toshiba medium voltage motors come standard with single-hole terminal lugs, per NEMA MG1 standard.

Burndy Lugs/Two-Hole Terminals

Option		Burndy
Frames	440/500	$744
	5000/5800	$760
	680/6800/450	$910
	N6800–N8800*	$1,090
	1080/T8800	$1,090
	1400	$1,090

* Non-NAFTA frames

Lubrication

All bearings in motors with Class F insulation will be furnished with a lubricant that is capable of operating in ambient temperatures between -26˚ and 40˚C. Please note that it is not recommended to mix greases of different bases. The mixing of different types of thickeners may destroy the composition and physical properties of the grease.

Grease – High Temperature

This adder is for applications in which the ambient temperature is from 45˚ to 50˚C.

Option		High Temp. Grease (45˚ to 50˚C)
Frames	440/500	$273
	5000/5800	$315
	680/6800/450	$368
	N6800–N8800*	$409
	1080/T8800	$443
	1400	$443

* Non-NAFTA frames

Grease – Low Temperature

This adder is for applications in which the ambient temperature ranges from -40˚ to -26˚C.

Option		Low Temp. Grease (–40˚ to –26˚C)
Frames	440/500	$273
	5000/5800	$315
	680/6800/450	$368
	N6800–N8800*	$409
	1080/T8800	$443
	1400	$443

* Non-NAFTA frames

Oil – Low Temperature

See Bearing Oil Sump Heater option.

Oil – Mist

Medium voltage motors can be provided to accept an externally-generated oil-mist/dry sump lubrication arrangement. The type of preparation must be noted within the purchase order:

1. Oil-Mist Provision (provision for future oil mist): The bearing cavity is arranged for oil-mist, but the bearings will be packed with grease for normal operation. Should the oil-mist system be connected, Toshiba recommends that the grease be cleaned from the bearings and bearing cavities.
2. Oil-Mist Ready: The bearings will receive a light coat of oil for testing and shipment; however, the oil-mist system must be connected upon receipt of product.

Option		Oil-Mist Provision	Oil-Mist Ready
Frames	440/500	$2,625	$2,625
	5000/5800	$3,828	$3,828
	680/6800/450	$4,150	$4,150
	N6800–N8800*	$4,150	$4,150
	1080/T8800	$4,150	$4,150
	1400	$4,328	$4,328

* Non-NAFTA frames

Special Notes:

- This adder is not available on general purpose vertical shaft-down or shaft-up applications.
- Oil-mist options are not available on sleeve bearing designs.

Constant Level Oilers

Option		Oiler (1 per Bearing)
Frames	5000/5800	$1,479
	680/6800/450	$1,627
	N6800–N8800*	N/A
	1080/T8800	$1,790
	1400	$1,969

* Non-NAFTA frames

Special Notes:

- Constant Level Oiler adder is available on motors with sleeve bearings only.

Forced Lube Provisions (Sleeve Bearings Only)

Option		Carbon Steel Force Lube Provisions Only	Stainless Steel Force Lube Provisions Only
Frames	440/500	$1,280	$2,022
	5000/5800	$1,280	$2,022
	680/6800/450	$1,408	$2,224
	N6800–N8800*	N/A	N/A
	1080/T8800	$1,703	$2,690
	1400	$1,874	$2,960

* Non-NAFTA frames

Special Note:

- Flanges and piping (in carbon and stainless steel) are available. Please contact Toshiba for pricing.

Nameplates

Standard nameplates are 304-grade stainless steel with engraved lettering. Additional nameplates for remote-mounting and special markings are available.

Duplicate or Special Nameplates

For requests other than below, contact Toshiba.

Option		Duplicate Nameplate	Special ID Tag	316 Stainless Steel
Frame	All Frames	$131	$131	$340

* Non-NAFTA frames

Paint

The standard paint finish on Toshiba motors is a self-priming, air-dried, acrylic alkyd resin finish. Beyond the standard paint finish, special colors and types of paints are available upon request. For special paint requirements, full specifications and color chip/manufacture color code will be required. Special paints requiring special application/curing equipment may not be available. Contact Toshiba for full details.

Option		Special Paint Color	Epoxy
Frames	440/500	$875	$3,250
	5000/5800	$984	$3,480
	680/6800/450	$1,312	$3,860
	N6800–N8800*	$1,312	$4,150
	1080/T8800	$1,312	$4,430
	1400	$1,480	$4,710

* Non-NAFTA frames

Seals

Shaft seals are installed on the shaft at the bracket face to prevent the ingress of dirt and liquid. Toshiba motors with sleeve bearings come standard with labyrinth seals. For motors with anti-friction bearings, the following options are available.

Option		Labyrinth Drive End	Labyrinth Both Ends	Taconite Drive End (1)	Taconite Both Ends (1)
Frames	440/500	$2,480	$3,306	$2,480	$3,306
	5000/5800	$2,612	$3,438	$2,612	$3,438
	680/6800/450	$2,926	$3,850	$2,926	$3,850
	N6800–N8800*	$2,926	$3,850	$2,926	$3,850
	1080/T8800	$2,926	$3,850	$2,926	$3,850
	1400	$3,277	$4,312	$3,277	$4,312

(1) Taconite seal construction consists of two special bronze labyrinth seals (one on each end).

Special Notes:

- Not available on ODP 5810 and smaller.

Shafts

For shafts with non-NEMA dimensions and/or non-Toshiba standard designs, see adders below.

List Adders for Special Shafts

- For NAFTA Qualified Motors: add $2,500 + price of option(s) below
- For Non-NAFTA Qualified Motors: add $3,000 + price of option(s) below

Option		4142 High Carbon Steel	Drill & Tap in Shaft End	Omit Keyway	
Frames	440/500	$440	$225	$219	
	5000/5800	$460	$270	$230	
	680/6800/450	$546	$302	$273	
	N6800–N8800*	$546	$302	$273	
	1080/T8800	$546	$302	$273	
	1400	$620	$338	$305	

Option		Threads	Tapers (1)	Up to 5" Additional Length	Forged Shaft
Frames	440/500	$219	$295	$315	Contact Toshiba
	5000/5800	$230	$306	$352	
	680/6800/450	$273	$438	$395	
	N6800–N8800*	$273	$438	$395	
	1080/T8800	$273	$438	$395	
	1400	$305	$490	$442	

* Non-NAFTA frames

(1) Customer must furnish taper gauge freight allowed to Toshiba factory.

Special Notes:

- 4142 shaft material comes standard on belted coupled roller bearing option.

Shaft Grounding Provisions

Shaft grounding provisions help to eliminate shaft currents that can be introduced into the motor through upstream controllers (i.e. adjustable speed drives). These currents can potentially lead to premature failure of the bearings, commonly referred to as fluting.

Option		Shaft Grounding (1)
Frames	440/500	$3,080
	5000/5800	$3,080
	680/6800/450	$3,450
	N6800–N8800*	$3,450
	1080/T8800	$3,450
	1400	$3,863

* Non-NAFTA frames

(1) For additional or alternative protection against shaft currents, see insulated bearings under Bearings section.

Special Notes:

- Insulating the bearings is recommended when the shaft voltage exceeds 300 mV.
- It is up to the user to determine when insulated bearings are required, especially with the use of an inverter-fed control. NEMA MG1 Part 31 suggests insulating the bearing(s) on all motors in 500 series frames and larger that are inverter-fed.
- Toshiba suggests insulating both bearings on all frame sizes 440 and larger when used with adjustable speed drives.
- When insulated bearings are used on direct coupled applications, the use of insulated coupling and/or shaft grounding brush is required to reduce the risk of driven equipment bearing damage.
- Ground brushes are not suitable for Division 2 environments.
- If bearing thermal devices are required with insulated bearings, a special version of the thermal device will be required. Please contact Toshiba for availability and pricing.

Software: Engineering Data

Toshiba provides a variety of software for stock and production motors. The following standard Toshiba data package is available at no additional charge: certified prints, nameplate data, performance data, connection diagram, instructional and maintenance manual, and spare bearings parts list.

Above data will be sent out in electronic format (PDF only). If hard copy of information is required, see the adder below. For software other than what is listed above or that is specified after time of order, see table below.

Software	Price
Toshiba Standard Software Package	Included
Speed Torque and Speed-Current Curve	Included
Thermal Damage (Safe Stall Time) Curve	Included
Performance Curve	$160
Torsional Data (1)	$320
Non-Standard Outline Drawing	Contact Toshiba
Certificate of Compliance	Contact Toshiba
First Page of Customer Supplied Data Sheet (2)	$213
Additional Pages of Customer Supplied Data Sheet (2)	$32
Additional Copies of Data	$43
Express Shipping	$64
Other Special Requests	Contact Toshiba

* Non-NAFTA frames

(1) This adder will include shaft drawing, rotor assembly inertia, shaft torsional stiffness values.
(2) This adder pertains to typical Toshiba performance data only.

Soleplates/Slide Rails/Shims

Option		Soleplate (2 pcs)	Slide Rails	304 SS Shims
Frames	440/500	$7,410	$4,846	$2,359
	5000/5800	$8,059	$5,380	$2,429
	680/6800/450	$8,786	$6,025	$2,671
	N6800–N8800*	$8,786	$6,025	$2,671
	1080/T8800	$8,786	$6,025	$2,671
	1400	$9,610	$6,748	$2,939

* Non-NAFTA frames

Special Notes:

- Soleplates are for direct-coupled applications only.
- Slide Rails are for belted applications only.
- Toshiba's standard shim pack is 3 mm thick and is 304 stainless steel materials.

Space Heaters

Space heaters are strip-type heaters mounted inside the frame near the coils to prevent moisture condensation inside the motor during times the motor is not energized. Heater leads are brought out to the motor's auxiliary box and marked H1 and H2. Standard heater voltage is 120 V single-phase unless otherwise specified.

Option		Standard Space Heater	Low Temp Space Heater	Terminal Box Space Heater
Frames	440/500	$1,425	$2,850	$1,425
	5000/5800	$1,425	$2,850	$1,425
	680/6800/450	$1,425	$2,850	$1,425
	N6800–N8800*	$1,425	$2,850	$1,425
	1080/T8800	$1,596	$3,192	$1,596
	1400	$1,787	$3,574	$1,787

* Non-NAFTA frames

Special Notes:

- Space heaters are included on all Dura Bull & Top Hat 6800 and smaller with an auxiliary terminal box.
- Low temperature space heater is included on MV-840 offering wired to separate auxiliary box.

Surge Protection

The following options add protection from power surges coming from the power source. Surge capacitors reduce the steepness of a power surge front, and lightning arrestors limit the peak voltage of such a surge. Surge capacitors are not available if the motor is used with an adjustable speed drive.

Option		Surge Capacitor (1)	Lightning Arrestors (1)	Surge Protection Package (1)
Frames	440/500	$4,750	$16,700	$20,925
	5000/5800	$4,750	$16,700	$20,925
	680/6800/450	$4,750	$16,700	$20,925
	N6800–N8800*	$5,320	$18,704	$23,436
	1080/T8800	$5,958	$20,948	$26,248
	1400	$5,958	$20,948	$26,248

* Non-NAFTA frames

(1) Surge protection devices are not recommended for use with ASD control.

Special Note:

- These adders include NEMA Type II main terminal box.

TEFC 840 Severe Duty Package**

The Petrochem Severe Duty Package Offers:

- IP55 Degree of Protection for Motor & T-Boxes
- Non-Contacting Labyrinth Seals on Both Bearings
- Insulation System Capable of Withstanding an Immersion Test in Accordance with NEMA MG 1
- Tropicalization Treatment on Windings
- Cast Iron Frame & Brackets with Cast Iron or Fabricated Steel Terminal Box(es) & Fan Cover
- Grounding Lugs on Motor Frame & Inside Main T-Box
- 0.005-Inch Precision Foot Flatness
- Non-Sparking, Epoxy-Coated Aluminum Internal Fan
- Direction of Rotation Arrow for Motors with Uni-Directional Rotation
- Gasketed Main T-Box & Auxiliary T-Box
- Lead Separator Gaskets
- Corrosion-Resistant Drain & Breather at Lowest Part of Motor Frame & Inside Main T-Box
- Precision Unfiltered Vibration Velocity: 2-Pole: 0.10 in/s; 4- & 6-Pole: 0.08 in/s; 8-Pole: 0.06 in/s
- Severe Duty, Corrosion-Resistant, Rust-Inhibitive Paint System on Motor & Shaft/Rotor Assembly
- Corrosion-Resistant Hardware
- Standard Non-Witnessed Routine Testing per IEEE 112

Option		TEFC 840 Package
Frames	5000/5800	$12,360

* Non-NAFTA frames

Special Note:

** Available on TEFC enclosure only.

Testing

All Toshiba motors are tested in compliance with IEEE Std. 112 to meet NEMA MG1 requirements. Test reports and optional testing are available for each individual motor. Duplicates/copies of standard routine test reports are available.

Please contact Toshiba for scheduling/coordination for witness testing requirements.

Option		Routine, Un-witnessed (Report Only)	Routine, Witnessed	Complete, Un-witnessed
Frames	440/500	Included	$10,000	$10,927
	5000/5800	Included	$10,000	$10,927
	680/6800/450	Included	$10,000	$10,927
	N6800–N8800*	Included	$11,064	$11,991
	1080/T8800	Included	$12,765	$13,829
	1400	Included	$12,765	$13,829
Option		**Complete, Witnessed**	**Noise, Un-witnessed (1)**	**Noise Witnessed (1)**
Frames	440/500	$19,404	$3,723	$5,957
	5000/5800	$19,404	$3,723	$5,957
	680/6800/450	$19,404	$3,723	$5,957
	N6800–N8800*	$20,468	$4,255	$6,393
	1080/T8800	$22,340	$4,680	$6,819
	1400	$22,340	$4,680	$6,819
Option		**Vibration**	**Insulation Resistance**	**Polarization Index**
Frames	440/500	$2,659	$1,595	$1,914
	5000/5800	$2,659	$1,595	$1,914
	680/6800/450	$2,659	$1,595	$1,914
	N6800–N8800*	$3,191	$2,127	$2,446
	1080/T8800	$3,617	$2,553	$2,872
	1400	$3,617	$2,553	$2,872

* Non-NAFTA frames

(1) Noise test consists of overall sound pressure values/readings only. For octave band measurements, please contact Toshiba.

Special Notes:

- Contact Toshiba for immersion testing on medium voltage motors.
- Every motor manufactured by Toshiba is given a routine test per NEMA MG1 and IEEE 112. Test results are compared to design standards and limits to ensure freedom from electrical or mechanical defects. A standard routine test consists of:
  - » No-Load Current
  - » No-Load Watts Inputs
  - » No-Load Speed
  - » Winding Resistance
  - » High Potential Test (Dielectric Test)
  - » Locked Rotor Current
  - » Locked Rotor Watts Input
  - » Visual Inspection
  - » Vibration Check – Overall Vibration Displacement Measurements Tested per NEMA MG1-12
- Performance tests are performed In accordance with NEMA MG1-12 and IEEE 112 Method B (dynamometer) or Method "F1". A complete performance test consists of:
  - » Temperature Rise of Stator Windings, Drive End Bearing, and Frame at Rated load
  - » Winding Resistance
  - » Input Current at 125, 100, 75, 50, and 25 percent of Rated No-load HP
  - » Efficiency at 125, 100, 75, 50, and 25 percent of Rated Full-load HP
  - » Power Factor at 125, 100, 75, 50, and 25 percent of Rated Full-load HP
  - » Speed (RPM) at 125, 100, 75, 50, and 25 percent of Rated Full-load HP
  - » Torque at 125, 100, 75, 50, and 25 percent of Rated Full-load HP
  - » Locked Rotor Torque and Amps
  - » Breakdown Torque
  - » No Load Amps and Watt Input

Thermal Protection

Toshiba provides a wide variety of protective devices which are available as follows.

Thermocouples

Winding (Stator) Thermocouples – A set of six winding thermocouples (two per phase) are provided and leads are terminated in a separate auxiliary conduit box. Pricing below does not include readout devices.

Option		Stator Thermocouples Type J	Stator Thermocouples Type T
Frames	440/500	$2,625	$2,625
	5000/5800	$2,625	$2,625
	680/6800/450	$2,625	$2,625
	N6800–N8800*	$2,887	$2,887
	1080/T8800	$3,150	$3,150
	1400	$3,150	$3,150
Option		**Stator Thermocouples Type E**	**Stator Thermocouples Type K**
Frames	440/500	$2,625	$2,625
	5000/5800	$2,625	$2,625
	680/6800/450	$2,625	$2,625
	N6800–N8800*	$2,887	$2,887
	1080/T8800	$3,150	$3,150
	1400	$3,150	$3,150

* Non-NAFTA frames

Bearing Thermocouple – Pricing includes one thermocouple per bearing (total of two) with leads terminated to its own cable head. Termination to an auxiliary terminal box is available at NO additional cost. Pricing below does not include readout devices.

Option		Bearing Thermocouples Type J	Bearing Thermocouples Type T	Bearing Thermocouples Type E
Frames	440/500	$3,938	$3,938	$3,938
	5000/5800	$3,938	$3,938	$3,938
	680/6800/450	$3,938	$3,938	$3,938
	N6800–N8800*	$4,331	$4,331	$4,331
	1080/T8800	$4,725	$4,725	$4,725
	1400	$4,725	$4,725	$4,725
Option		**Bearing Thermocouples Type K**		
Frames	440/500	$3,938		
	5000/5800	$3,938		
	680/6800/450	$3,938		
	N6800–N8800*	$4,331		
	1080/T8800	$4,725		
	1400	$4,725		

* Non-NAFTA frames

Special Note:

- Steel core hex conduit is used when terminating to the cast iron auxiliary terminal box.

Resistance Temperature Detectors (RTDs)

Air Inlet RTD

Option		Air Inlet RTD
Frames	440/500	$1,795
	5000/5800	$1,795
	680/6800/450	$1,795
	N6800–N8800*	$1,795
	1080/T8800	$1,795
	1400	$1,795

* Non-NAFTA frames

Bearing RTDs – Pricing includes one RTD per bearing (total of two) and a three-lead, single element design with leads terminated to its own cable head. Termination to an auxiliary terminal box is available at an additional cost.

Option		Bearing RTDs (Copper, 10 Ohm)	Bearing RTDs (Platinum, 100 Ohm)
Frames	440/500	$3,590	$3,590
	5000/5800	$3,590	$3,590
	680/6800/450	$3,590	$3,590
	N6800–N8800*	$3,590	$3,590
	1080/T8800	$3,590	$3,590
	1400	$3,590	$3,590
Option		**Bearing RTDs (Nickel, 120 Ohm)**	
Frames	440/500	$3,590	
	5000/5800	$3,590	
	680/6800/450	$3,590	
	N6800–N8800*	$3,590	
	1080/T8800	$3,590	
	1400	$3,590	

* Non-NAFTA frames

Special Note:

- Contact Toshiba for pricing on other RTD types including dual element.
- Provisions for bearing RTDs are standard on Dura-Bull TX® design motors so adder is only $1,450 (list price)
- RTD provisions (1 per Bearing) are included in MV-840 as standard feature.
- Auxiliary terminal box is available with additional cost.

Winding (Stator) RTDs – A set of six winding RTDs (two per phase, leads) are provided with leads terminated in an auxiliary conduit box. Pricing below does not include readout devices.

Option		Stator RTDs (Copper, 10 Ohm)	Stator RTDs (Platinum, 100 Ohm)	Stator RTDs (Nickel, 120 Ohm)
Frames	440/500	$3,086	$3,086	$3,086
	5000/5800	$3,086	$3,086	$3,086
	680/6800/450	$3,086	$3,086	$3,086
	N6800–N8800*	$3,086	$3,086	$3,086
	1080/T8800	$3,086	$3,086	$3,086
	1400	$3,086	$3,086	$3,086

* Non-NAFTA frames

Special Notes:

- Contact Toshiba for pricing on other RTD types.
- Platinum, 100 Ohm RTDs are included as standard on medium voltage totally enclosed fan cooled Dura-Bull TX® motors, 840 , all Top Hat enclosures & N6810 through N8810.

Thermostat

Thermostats (Klixons) – Toshiba's standard offering of MV-XP includes hermetically sealed normally-closed (NC), bi-metallic thermostats, temperature actuated element mounted on the stator winding. Leads are marked P1 and P2. Termination of the leads is in an auxiliary conduit box. Special thermostats are available upon request. Contact Toshiba for pricing and availability.

Vertical Jacking Provisions

Vertical jacking is used to assist in the proper alignment of the motor shaft with the driven equipment. Provisions for four jacking bolts (one per foot) are provided. Jacking bolts are to be supplied by the customer.

Option		Vertical Jacking Provisions
Frames	440/500	$984
	5000/5800	$1,203
	680/6800/450	$1,203
	N6800–N8800*	$1,323
	1080/T8800	$1,443
	1400	$1,443

* Non-NAFTA frames

Option		Vertical Jacking Screws
Frames	440/500	$340
	5000/5800	$480
	680/6800/450	$540
	N6800–N8800*	$610
	1080/T8800	$880
	1400	

Special Note:
• Four jacking screws will be provided per motor.

Vibration Detectors

These detectors are for single-direction monitoring (horizontal, vertical, or axial). For total coverage of all three directions, three detectors must be used. Monitoring direction must be specified at time of order.

Vibration Monitoring Devices

Robertshaw – consists of a self-contained detector and switch. A Robertshaw is an acceleration-sensitive instrument that measures peak vibratory shock at the point of measurement.

Accelerometer – used to sense bearing housing vibration on motors with anti-friction bearings.

Option		Provision for Robertshaw Sensor (1)		Robertshaw Sensor (2)	
		One End	Both Ends	One End	Both Ends
Frames	440/500	$519	$1,039	$2,133	$4,266
	5000/5800	$519	$1,039	$2,133	$4,266
	680/6800/450	$519	$1,039	$2,133	$4,266
	N6800–N8800*	$570	$1,142	$2,346	$4,692
	1080/T8800	$622	$1,246	$2,559	$5,119
	1400	$622	$1,246	$2,559	$5,119
Option		**Provision for Metrix Accelerometer Sensor (3)**		**Metrix Accelerometer Sensor/Transmitters**	
		One End	Both Ends	One End	Both Ends
Frames	440/500	$519	$1,039	$2,266	$4,520
	5000/5800	$519	$1,039	$2,266	$4,520
	680/6800/450	$519	$1,039	$2,266	$4,520
	N6800–N8800*	$570	$1,142	$2,492	$4,972
	1080/T8800	$622	$1,246	$2,719	$5,424
	1400	$622	$1,246	$2,719	$5,424
Option		**Termination to Aux. T-Box**			
Frames	440/500	$940			
	5000/5800	$940			
	680/6800/450	$940			
	N6800–N8800*	$1,069			
	1080/T8800	$1,130			
	1400	$1,130			

* Non-NAFTA frames

(1) Provisions for mounting are based on a Robertshaw model number 366. For other sensor provisions, contact Toshiba for price and availability.
(2) Robertshaw sensors are not suitable for Division 2 applications. Please contact Toshiba for Division 2 sensors.
(3) Pricing is based on Toshiba providing a single 1" spot face surface with a ¼"-28 drilled and tapped hole, unless specified otherwise.

Vibration Probe – used to sense shaft vibration on motors with sleeve bearings. Contact Toshiba for other vibration probe options.

Option		Provisions for Bently-Nevada Vibration Probes		Bently-Nevada** Vibration Probes (X,Y) Non-Contacting	
		One End	Both Ends	One End	Both Ends
Frames	440/500	N/A	N/A	N/A	N/A
	5000/5800	$2,207	$4,415	$12,425	$24,851
	680/6800/450	$2,207	$4,415	$12,425	$24,851
	N6800–N8800*	N/A	N/A	N/A	N/A
	1080/T8800	$2,648	$5,298	$13,667	$27,336
	1400	$2,648	$5,298	$13,667	$27,336

* Non-NAFTA frames

Special Note:
** Key phasor available upon request; use $6,250 list adder.

Voltage

Please contact Toshiba for voltages that are not listed in this catalog.

Appendix A

Model Number Breakdown Type 1

First Field (One Digit)

Symbol	Phase/Start	Design
A	Three-Phase Squirrel Cage	A
B		B
C		C
D		D
I (Note 8)	Explosion Proof Drive System (UL File E53559)	
L	Single-Phase Condensor SKD	L
M		M
N		N
O		O
P	Single-Phase Squirrel Cage SIK	L
Q		M
R		N
S		O
T	Single-Phase, Two-Condensor Start & Operate SIKD	L
U		M
V		N
W		O
E	Three-Phase Wound Rotor	
F	Other Three-Phase	
G	Single-Phase, One Condensor SIKD	
X	Single-Phase Shaded Pole	
Y	Other Single-Phase	
Z	IEC Metric	

Use the Below for Motors over 1000 HP

H	Three-Phase Wound Rotor: Times 10
J	Three-Phase Squirrel Cage: Times 10
K	Three-Phase Squirrel Cage: Times 100

Example(s):

H125 = 1,250 HP

K125 = 12,500 HP

Second Field - HP (Three Digits)

Symbol			Output (HP)
X	?	?	Reciprocal
X	1	2	1/12
X	2	0	1/20
1	/	8	1/8
1	/	2	1/2
3	/	4	3/4
0	0	1	1
0	2	0	20
1	5	0	150
Y	?	?	1/10 Times
Y	1	5	1 1/2
Y	7	5	7 1/2
018 (Note 4)			18.5 kW

Third Field - Poles & Fan Type (One Digit)

Symbol	Pole	Fan Type	
1	2	Uni-CW	Single Speed
2		Bi	
3		Uni-CCW	
4	4	Bi	
5		Uni	
6	6	Bi	
7		Uni	
8	8	Bi	
E		Uni	
9	10	Bi	
F		Uni	
A	12	Bi	
G		Uni	
B	14	Bi	
H		Uni	
C	16	Bi	
J		Uni	
D	18	Bi	
K		Uni	
M	Over 20	Bi	
N		Uni	
W	One Winding		Multi-Speed
X	Two Winding		
Y	Three Winding		
Z	Other		

Bi = Bidirectional *

Uni = Unidirectional *

*Viewed from OPE

Fourth Field - Construction (One Digit)

Symbol	Enclosure
A	Open
C	Underwater Type - Gas Filled
D	Open Drip Proof Guarded
E	Totally Enclosed
F	Totally Enclosed Fan Cooled
G	Weather Protected Type-1
K	Open Pipe Ventilated
M	Splash Proof - Open Machine
N	Weather Protected Type-2
O	
P	Totally Enclosed Pipe-Ventilated Machine
Q	Underwater Type - Oil Filled
S	Guarded - Open Machine
U	Underwater Type - Water-Filled
V	Drip-Proof
Y	Explosion Proof
R	Corrosion Proof
W	Totally Enclosed Fan Cooled - Outdoor Use
Z	Water-Proof Machine
B	Totally Enclosed Air Over (TEAO)
H	Open Drip-Proof Air Over
L	Liquid Cooling
I	Water Cooling
J	
T	Totally Enclosed with Water Air Cooled (TEWAC)
X	Other
2	Brake Motor: 6 lb. ft.
3	Brake Motor: 10 lb. ft.
4	Brake Motor: 15 lb. ft.
5	Brake Motor: 35 lb. ft.
6	Brake Motor: 50 lb. ft.

Fifth Field (One Digit)

Symbol	Ins.	S.F.
A	A	1
B		1.15
C		1.25
D		1.35
E		1.4
U		SPL
F	B	1
G		1.15
H		1.25
I		1.35
J		1.4
V		SPL
K	F	1
L		1.15
M		1.25
N		1.35
O		1.4
W		SPL
P	H	1.0
Q		1.15
R		1.25
S		1.35
T		1.4
X		SPL

Model Number Breakdown Type 1

Sixth Field - Mounting (One Digit)		
Symbol	Mount Type	Shaft End
F	Floor-Mount	Standard
G		Short
A		Special
R	Resilient Base	Standard
Q		Short
I		Special
T	C-Face Footed	Standard
H		Special
U		Short
C	C-Face Footless	Standard
J		Special
E	D-Flange Footed	Standard
K		Special
D	D-Flange Footless	Standard
L		Special
M	Pad-Mount Footless w/o C-Face	Standard
P		Special
N	Footless Frame	Standard
V		Special
X	Other	---
S	OEM Motor	Special Shaft & Flange
B	OEM Motor	Standard

Seventh Field - Bearings (One Digit)	
Symbol	Bearing Type
1	Shielded Ball w/ Plugs
2	Shielded Ball w/o Plugs
3	Open Ball Bearing w/ Plugs
4	Roller Bearing on P.E. w/ Plugs
5	Roller Bearing on P.E. & O.P.E.
6	Sleeve Bearing w/ Plugs
7	Sleeve Bearing w/o Plugs
8	Roller Bearing on O.P.E. & Ball on P.E.
9	Special Construction
0	Other
F	Angular Contact Ball (P.E. & O.P.E.)
G	Angular Contact Ball + Ball
H	Angular Contact Ball + Roller
J	Cylindrical Roller + Ball
K	Cylindrical Roller + Roller
L	Sleeve Bearing (Horiz.) - Self Lub.
M	Sleeve Bearing for Vertical
N	Third Pedestal Bearing
P	Fourth Pedestal Bearing (Jackshaft)
Q	Ball + Forced Oil Lube
R	Roller + Forced Oil Lube
S	Angular Contact + Forced Oil Lube
T	Cylindrical Roller + Forced Oil Lube
U	Sleeve Bearing (Horiz.) - Forced Oil Lube
V	Sleeve for Vertical + Forced Oil Lube
W	Third Pedestal Bearing + Forced Oil Lube
X	Fourth Pedestal Bearing + Forced Oil Lube (Jackshaft)

Eighth Field - Voltage (One Digit)	
Symbol	Volts - Hz
A	230/460 - 60
B	460 - 60
C	230 - 60
D	115/230 - 60
E	115 - 60
F	240/480 - 60
G	2300 or 2400 - 60
H	220/380 - 60
I	4000 or 4160 - 60
J	2300/4160 or 2300/4000 or 2400/4160 - 60
K	6000 or 6600 - 60
L	208/416 - 60
M	13200 - 60
N	220/440 - 60
O	575 - 60
P	Other - 60
Q	2300 - 50
R	4000 or 4160 - 50
S	4600 - 50
T	6000 or 6600 - 50
U	230/460 - 60
V	190/380 - 50
W	200/400 - 50
X	220/440 - 50
Y	Other - 50
Z	Other

Ninth Field (Not To Exceed Three Digits)	
Symbol	Features
0	Toshiba Internal Reference
1	Toshiba Internal Reference
2	Toshiba Internal Reference
3	Toshiba Internal Reference
...n	Toshiba Internal Reference
A	Toshiba Internal Reference
B	Toshiba Internal Reference
C	Toshiba Internal Reference
D	Toshiba Internal Reference
E	Toshiba Internal Reference
F	Toshiba Internal Reference
G	Toshiba Internal Reference
H	Toshiba Internal Reference
I	Toshiba Internal Reference
J	Toshiba Internal Reference
K	Toshiba Internal Reference
L	Toshiba Internal Reference
M	Toshiba Internal Reference
N	Toshiba Internal Reference
O	Toshiba Internal Reference
P	Toshiba Internal Reference
Q	Toshiba Internal Reference
R	Toshiba Internal Reference
S	Toshiba Internal Reference
T	Toshiba Internal Reference
U	Toshiba Internal Reference
V	Toshiba Internal Reference
W	Toshiba Internal Reference
X	Toshiba Internal Reference
Y	Toshiba Internal Reference
Z	Toshiba Internal Reference
LX	Toshiba Internal Reference
LO	Toshiba Internal Reference
NH	Toshiba Internal Reference
Medium Voltage Ratings	
C	Toshiba Internal Reference
D	Toshiba Internal Reference
E	Toshiba Internal Reference
F	Toshiba Internal Reference
M	Toshiba Internal Reference

Tenth Field Optional Extensions (Note 6)	
Symbol	Features
A	Toshiba Internal Reference
B	Toshiba Internal Reference
C	Toshiba Internal Reference
D	Toshiba Internal Reference
E	Toshiba Internal Reference
F	Toshiba Internal Reference
G	Toshiba Internal Reference
H	Toshiba Internal Reference
I	Toshiba Internal Reference
J	Toshiba Internal Reference
K	Toshiba Internal Reference
L	Toshiba Internal Reference
M	Toshiba Internal Reference
N	Toshiba Internal Reference
O	Toshiba Internal Reference
P	Toshiba Internal Reference
Q	Toshiba Internal Reference
R	Toshiba Internal Reference
S	Toshiba Internal Reference
T	Toshiba Internal Reference
U	Toshiba Internal Reference
V	Toshiba Internal Reference
W	Toshiba Internal Reference
X	Toshiba Internal Reference
Y	Toshiba Internal Reference
Z	Toshiba Internal Reference

Appendix A

Model Number Breakdown Type 2

Horsepower or kW	Pole Speed	Enclosure / Construction	Product Family
(Three Digits)	(One Digit)	(Two Digit)	(One Digit)
___ ___ ___	___	___ ___	___
Horsepower 1/2 = 1/2 HP 3/4 = 3/4 HP Y75 = 7.5 HP 1000+ (HP) Rating First Digit = M [M = 50 Multiplier] 5000+ (HP) Rating First Digit = C [C = 250 Multiplier] Second & Third Digit = A Numerical Range from 20 to 99 {Ex: M20 = 1000; 50 x 20 = 1000} {Ex: M25 = 1250; 50 x 25 = 1250} **KW[3]** X37 = 0.37 KW Y11 = 1.1 KW 018 = 18.5 KW	**Single Speed** 1 = 2-Pole (uni-CW) 2 = 2-Pole (Bi) 3 = 2-Pole (Uni-CCW) 4 = 4-Pole (bi) 5 = 4-Pole (Uni-CCW) 6 = 6-Pole (Bi) 7 = 6-Pole (Uni-CCW) 8 = 8-Pole (Bi) **Multi-Speed** N = 4/8-Pole 1 Wdg. P = 4/8-Pole 2 Wdg. Q = 4/6-Pole 2 Wdg.	BC = Blower Cooled DP = ODP FA = TEAO FC = TEFC (IP44) FN = TENV FT = TEFC (IP54) QD = Quarry Duty SD = Severe Duty TC = TEAAC WP = WP1 WT = WP2 XD = 841 Petro-Chem XP = TEXP XS = 840 Mill & Chem	A = Anti-Friction Bearings B = Brake Motor C = Design C D = Single Label (Class I) E = Dual Label (Class I & II) F = VFD/ASD Motor G = Cooling Tower H = Close-Coupled Pump (Steel) J = Close-Coupled Pump (Cast Iron) K = Dry Kiln M = Metric[3] (KW Only) N = Steel Frame P = OWP Q = Sleeve Bearing R = Rig Motor S = Standard (default) T = Triple Rate U = Permanent Magnet V = Vertical P-Base W = SS Washdown

The standard frame offering's catalog number ends after the initial eleventh digit (i.e. shaft column). All alternate frame size offerings use an alpha-numerical sequence.

EXAMPLE:
The defined standard frame assignment is N449T, the catalog number would be: 2504FCSB31A
Alternate Frames Available:
449T Frame: Catalog Number: 2504FCSB31A-**F1**
505UZ Frame: Catalog Number: 2504FCSB31**G-F1**

Model Number Breakdown Type 2

Voltage/ Frequency	Efficiency Type	Mounting	Shaft		Suffix (Optional)	
(One Digit)	(One Digit)	(One Digit)	(One Digit)		(Three Digits) - All Are Required for Proper Usage	
___	___	___	___	–	___	___ ___
60 Hz A = 230/460 B = 460 C = 575 D = 230/460/796 G = 2300 J = 2300/4160 K = 2300/4000 L = 4000 O = 6600 U = 200 **50 Hz** M = 230/400 N = 400 8 = 6000 **60/50Hz** R = 230/460 V @ 60 Hz and 190/380V @ 50 Hz T= 460 V @ 60 Hz and 380V @50 Hz V= 230/400 V @ 50 Hz and 460V @ 60Hz W = 400 V @ 50 Hz and 460 V @ 60 Hz	**NEMA** 1 = Standard Eff. 2 = Epact Eff. 3 = Premium Eff. 4 = NEMA Prem. Eff. 9 = Super Prem. Eff **IEC** 5 = IE1 6 = IE2 7 = IE3 8 = IE4	**NEMA** 1 = Footed 2 = C-Face Footed 3 = D-Flange Footed 4 = C-Face Round 5 = D-Flange Round 6 = Round Body 7 = C-Face NEMA "BA" P = 10" P-Base (250~280 Frame) Q = 12" P-Base (250~320 Frame) R = 16" P-Base (280~440 Frame) S = 20" P-Base (440 Frame) T = 24" P-Base (440 Frame) U = 36" P-Base (440 Frame) **IEC**[4, 5, 6] F = Footed (B3) G = FF Footed (B35) H = FT Footed (B34) J = FF Rd Body (B5) K = FT Rd Body (B14)	**NEMA** A = T-Shaft B = TS-Shaft C = TSS-Shaft D = TZ-Shaft E = US-Shaft F = USS-Shaft G = UZ-Shaft * H = 56-Shaft * K = 140C-Shaft M = JM-Shaft N = Keyless Shaft P = JP-Shaft W = HP Solid Shaft (Normal Thrust) X = LP Solid Shaft (Medium Thrust) Y = VP Solid Shaft (High Thrust) Z = TP Hollow Shaft (High Thrust) **IEC** S = Std. Shaft **Note:** * = Shaft & Flange for Frame Series/Size Described		A = Alum. Rotor C = Cu Bar Rotor F = Alt. Frame Size H = Toshiba Internal Reference L= Aluminum Frame P = Purchased R = Roller Bearing T = Toshiba Internal Reference Y = 115°C Ambient Z = 135°C Ambient 2 = F2 Mount 3 = F3 Top Mount	See Note #2

Notes:

(2) HP ratings covered by multiple frame assignments will follow this format as an example.
Rating: EQPIII/4P/250 HP/460V/TEFC Available in 449, N449, & 505UZ Frames

(3) To Be Used Only in Conjunction with IEC Metric Frame Ratings; 18.5 KW is Special Case

(4) FF Flange is Similar to NEMA D-Flange with Clearance through Hole Construction

(5) FT Flange is Same as FF Flange Except Holes are Tapped

(6) FI Flange is Similar to NEMA C-Face Flange with Blind Threaded Holes

Appendix B
Efficiency Tables

Full-Load Efficiencies for NEMA Premium® Efficiency Electric Motors Rated 600 V or Less
(NEMA Table 12-12 & NEMA 20-B)

HP	2-Pole		4-Pole		6-Pole		8-Pole	
	Nominal Efficiency	Minimum Efficiency	Nominal Efficiency	Minimum Efficiency	Nominal Efficiency	Minimum Efficiency	Nominal Efficiency	Minimum Efficiency
Open Drip-Proof Motors								
1	77.0	74.0	85.5	82.5	82.5	80.0	75.5	72.0
1.5	84.0	81.5	86.5	84.0	86.5	84.0	77.0	74.0
2	85.5	82.5	86.5	84.0	87.5	85.5	86.5	84.0
3	85.5	82.5	89.5	87.5	88.5	86.5	87.5	85.5
5	86.5	84.0	89.5	87.5	89.5	87.5	88.5	86.5
7.5	88.5	86.5	91.0	89.5	90.2	88.5	89.5	87.5
10	89.5	87.5	91.7	90.2	91.7	90.2	90.2	88.5
15	90.2	88.5	93.0	91.7	91.7	90.2	90.2	88.5
20	91.0	89.5	93.0	91.7	92.4	91.0	91.0	89.5
25	91.7	90.2	93.6	92.4	93.0	91.7	91.0	89.5
30	91.7	90.2	94.1	93.0	93.6	92.4	91.0	90.2
40	92.4	91.0	94.1	93.0	94.1	93.0	91.7	90.2
50	93.0	91.7	94.5	93.6	94.1	93.0	91.7	91.0
60	93.6	92.4	95.0	94.1	94.5	93.6	92.4	91.7
75	93.6	92.4	95.0	94.1	94.5	93.6	93.0	93.0
100	93.6	92.4	95.4	94.5	95.0	94.1	94.1	93.0
125	94.1	93.0	95.4	94.5	95.0	94.1	94.1	93.0
150	94.1	93.0	95.8	95.0	95.4	94.5	94.1	93.0
200	95.0	94.1	95.8	95.0	95.4	94.5	94.1	93.0
250	95.0	94.1	95.8	95.0	95.8	95.0	95.0	94.1
300	95.4	94.5	95.8	95.0	95.8*	95.0*	95.0*	94.1*
350	95.4	94.5	95.8	95.0	95.8*	95.0*	95.0*	94.1*
400	95.8	95.0	95.8	95.0	95.8*	95.0*	95.0*	94.1*
450	96.2	95.4	96.2	95.4	95.8*	95.0*	95.0*	94.1*
500	96.2	95.4	96.2	95.4	95.8*	95.0*	95.0*	94.1*
Totally Enclosed Fan Cooled Motors								
1	77.0	74.0	85.5	82.5	82.5	80.0	75.5	72.0
1.5	84.0	81.5	86.5	84.0	87.5	85.5	78.5	75.5
2	85.5	82.5	86.5	84.0	88.5	86.5	84.0	81.5
3	86.5	84.0	89.5	87.5	89.5	87.5	85.5	82.5
5	88.5	86.5	89.5	87.5	89.5	87.5	86.5	94.0
7.5	89.5	87.5	91.7	90.2	91.0	89.5	86.5	84.0
10	90.2	88.5	91.7	90.2	91.0	89.5	89.5	87.5
15	91.0	89.5	92.4	91.0	91.7	90.2	89.5	87.5
20	91.0	89.5	93.0	91.7	91.7	90.2	90.2	88.5
25	91.7	90.2	93.6	92.4	93.0	91.7	90.2	88.5
30	91.7	90.2	93.6	92.4	93.0	91.7	91.7	90.2
40	92.4	91.0	94.1	93.0	94.1	93.0	91.7	90.2
50	93.0	91.7	94.5	93.6	94.1	93.0	92.4	91.0
60	93.6	92.4	95.0	94.1	94.5	93.6	92.4	91.0
75	93.6	92.4	95.4	94.5	94.5	93.6	93.6	92.4
100	94.1	93.0	95.4	94.5	95.0	94.1	93.6	92.4
125	95.0	94.1	95.4	94.5	95.0	94.1	94.1	93.0
150	95.0	94.1	95.8	95.0	95.8	95.0	94.1	93.0
200	95.4	94.5	96.2	95.4	95.8	95.0	94.5	93.6
250	95.8	95.0	96.2	95.4	95.8	95.0	95.0	94.1
300	95.8	95.0	96.2	95.4	95.8*	95.0*	95.0*	94.1*
350	95.8	95.0	96.2	95.4	95.8*	95.0*	95.0*	94.1*
400	95.8	95.0	96.2	95.4	95.8*	95.0*	95.0*	94.1*
450	95.8	95.0	96.2	95.4	95.8*	95.0*	95.0*	94.1*
500	95.8	95.0	96.2	95.4	95.8*	95.0*	95.0*	94.1*

*Not Regulated by the U.S. Department of Energy
(Refer to NEMA Table 20-B)

Appendix B
Frame Dimensions

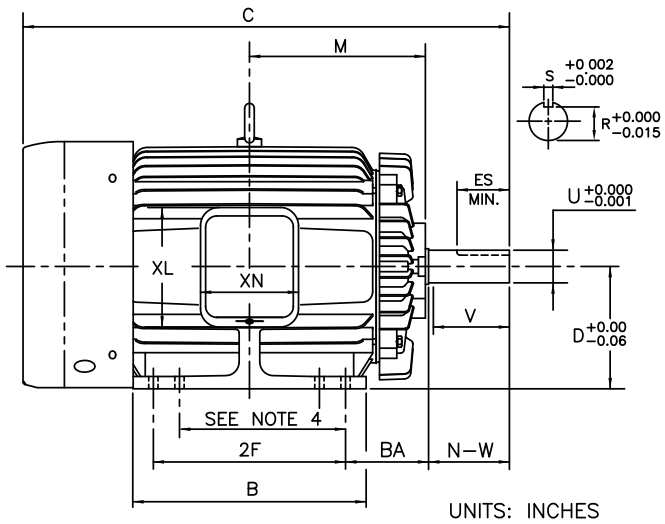

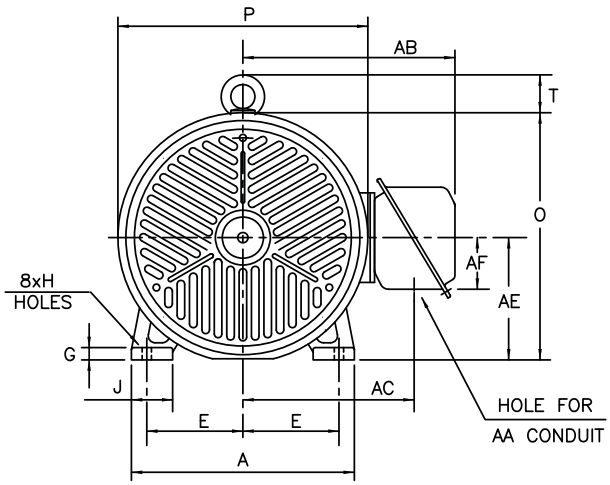

NEMA Quick Reference Chart

NEMA Frames	D	E	2F	H	BA	N-W	U	R	ES	S
48	3.00	2.12	2.75	0.34	2.50	1.50	0.500	0.453	---	flat
56	3.50	2.44	3.00	0.34	2.75	1.88	0.625	0.517	---	0.188
143	3.50	2.75	4.00	0.34	2.25	2.00	0.750	0.643	1.41	0.188
143T	3.50	2.75	4.00	0.34	2.25	2.25	0.875	0.771	1.41	0.188
145	3.50	2.75	5.00	0.34	2.25	2.00	0.750	0.643	1.41	0.188
145T	3.50	2.75	5.00	0.34	2.25	2.25	0.875	0.771	1.41	0.188
182	4.50	3.75	4.50	0.41	2.75	2.25	0.875	0.771	1.41	0.188
182T	4.50	3.75	4.50	0.41	2.75	2.75	1.125	0.986	1.78	0.250
184	4.50	3.75	4.50	0.41	2.75	2.25	0.875	0.771	1.41	0.188
184T	4.50	3.75	4.50	0.41	2.75	2.75	1.125	0.986	1.78	0.250
213	5.25	4.25	5.50	0.41	3.50	3.00	1.125	0.986	2.03	0.250
213T	5.25	4.25	5.50	0.41	3.50	3.38	1.375	1.201	2.41	0.312
215	5.25	4.25	7.00	0.41	3.50	3.00	1.125	0.986	2.03	0.250
215T	5.25	4.25	7.00	0.41	3.50	3.38	1.375	1.201	2.41	0.312
254	6.25	5.00	8.25	0.53	4.25	3.37	1.125	0.986	2.03	0.250
254U	6.25	5.00	8.25	0.53	4.25	3.75	1.375	1.201	2.78	0.312
254T	6.25	5.00	8.25	0.53	4.25	4.00	1.625	1.416	2.91	0.375
256U	6.25	5.00	10.00	0.53	4.25	3.75	1.375	1.201	2.78	0.312
256T	6.25	5.00	10.00	0.53	4.25	4.00	1.625	1.416	2.91	0.375
284U	7.00	5.50	9.50	0.53	4.75	4.88	1.625	1.416	3.78	0.375
284T	7.00	5.50	9.50	0.53	4.75	4.62	1.875	1.591	3.28	0.500
284TS	7.00	5.50	9.50	0.53	4.75	3.25	1.625	1.416	1.91	0.375
286U	7.00	5.50	11.00	0.53	4.75	4.88	1.625	1.416	3.78	0.375
286T	7.00	5.50	11.00	0.53	4.75	4.62	1.875	1.591	3.28	0.500
286TS	7.00	5.50	11.00	0.53	4.75	3.25	1.625	1.416	1.91	0.375
324U	8.00	6.25	10.50	0.66	5.25	5.62	1.875	1.591	4.28	0.500
324S	8.00	6.25	10.50	0.66	5.25	3.25	1.625	1.416	1.91	0.375
324T	8.00	6.25	10.50	0.66	5.25	5.25	2.125	1.845	3.91	0.500
324TS	8.00	6.25	10.50	0.66	5.25	3.75	1.875	1.591	2.03	0.500
326U	8.00	6.25	12.00	0.66	5.25	5.62	1.875	1.591	4.28	0.500
326S	8.00	6.25	12.00	0.66	5.25	3.25	1.625	1.416	1.91	0.375
326T	8.00	6.25	12.00	0.66	5.25	5.25	2.125	1.845	3.91	0.500
326TS	8.00	6.25	12.00	0.66	5.25	3.75	1.875	1.591	2.03	0.500
364S	9.00	7.00	11.25	0.66	5.88	3.25	1.625	1.416	1.91	0.375
364U	9.00	7.00	11.25	0.66	5.88	6.37	2.125	1.845	5.03	0.500
364US	9.00	7.00	11.25	0.66	5.88	3.75	1.875	1.591	2.03	0.500
364T	9.00	7.00	11.25	0.66	5.88	5.88	2.375	2.021	4.28	0.625
364TS	9.00	7.00	11.25	0.66	5.88	3.75	1.875	1.951	2.03	0.500
365S	9.00	7.00	12.25	0.66	5.88	3.25	1.625	1.416	1.91	0.375
365U	9.00	7.00	12.25	0.66	5.88	6.37	2.125	1.845	5.03	0.500
365US	9.00	7.00	12.25	0.66	5.88	3.75	1.875	1.591	2.03	0.500
365T	9.00	7.00	12.25	0.66	5.88	5.88	2.375	2.021	4.28	0.625
365TS	9.00	7.00	12.25	0.66	5.88	3.75	1.875	1.591	2.03	0.500
404S	10.00	8.00	12.25	0.81	6.62	3.75	1.875	1.591	2.03	0.500
404U	10.00	8.00	12.25	0.81	6.62	7.12	2.375	2.021	5.53	0.625
404US	10.00	8.00	12.25	0.81	6.62	4.25	2.125	1.845	2.78	0.500
404T	10.00	8.00	12.25	0.81	6.62	7.25	2.875	2.45	5.65	0.750
404TS	10.00	8.00	12.25	0.81	6.62	4.25	2.125	1.845	2.78	0.500
405S	10.00	8.00	13.75	0.81	6.62	3.75	1.875	1.591	2.03	0.500
405U	10.00	8.00	13.75	0.81	6.62	7.12	2.375	2.021	5.53	0.625
405US	10.00	8.00	13.75	0.81	6.62	4.25	2.125	1.845	2.78	0.500
405T	10.00	8.00	13.75	0.81	6.62	7.25	2.875	2.45	5.65	0.750
405TS	10.00	8.00	13.75	0.81	6.62	4.25	2.125	1.845	2.78	0.500
444S	11.00	9.00	14.50	0.81	7.50	4.25	2.125	1.845	2.78	0.500
444U	11.00	9.00	14.50	0.81	7.50	8.62	2.875	2.45	7.03	0.750
444US	11.00	9.00	14.50	0.81	7.50	4.25	2.125	1.845	2.78	0.500
444T	11.00	9.00	14.50	0.81	7.50	8.50	3.375	2.88	6.91	0.875
444TS	11.00	9.00	14.50	0.81	7.50	4.75	2.375	2.021	3.03	0.625
445S	11.00	9.00	16.50	0.81	7.50	4.25	2.125	1.845	2.78	0.500
445U	11.00	9.00	16.50	0.81	7.50	8.62	2.875	2.45	7.03	0.750
445US	11.00	9.00	16.50	0.81	7.50	4.25	2.125	1.845	2.78	0.500
445T	11.00	9.00	16.50	0.81	7.50	8.50	3.375	2.88	6.91	0.875
445TS	11.00	9.00	16.50	0.81	7.50	4.75	2.375	2.021	3.03	0.625
447T	11.00	9.00	20.00	0.81	7.50	8.50	3.375	2.88	6.91	0.875
447TS	11.00	9.00	20.00	0.81	7.50	4.75	2.375	2.021	3.03	0.625
Toshiba Frames	**D**	**E**	**2F**	**H**	**BA**	**N-W**	**U**	**R**	**ES**	**S**
N449T	11.00	9.00	25.00	0.81	7.50	8.50	3.375	2.88	6.91	0.875
N449TS	11.00	9.00	25.00	0.81	7.50	4.75	2.375	2.021	3.03	0.625
505UZ	12.50	10.00	18.00	0.94	8.50	11.62	3.875	3.309	10.00	1.000
505US	12.50	10.00	18.00	0.94	8.50	4.75	2.875	2.45	3.00	0.750
505USS	12.50	10.00	18.00	0.94	8.50	4.75	2.375	2.021	3.00	0.625
507UZ	12.50	10.00	18.00	0.94	8.50	11.62	3.875	3.309	10.00	1.000
507US	12.50	10.00	22.00	0.94	8.50	10.13	3.375	2.88	8.50	0.875
507USS	12.50	10.00	22.00	0.94	8.50	4.75	2.375	2.021	3.00	0.625
5010UZ	12.50	10.00	32.00	1.12	8.50	11.62	4.375	3.817	10.00	1.000
5010US	12.50	10.00	32.00	1.12	8.50	6.25	3.625	3.134	5.00	0.875
5010USS	12.50	10.00	32.00	1.12	8.50	4.75	2.375	2.021	3.00	0.625
N587UZQ	14.50	11.50	25.00	1.12	10.00	11.62	4.375	3.817	10.00	1.000
N587UZ	14.50	11.50	25.00	1.12	10.00	11.62	3.875	3.309	10.00	1.000
N587US	14.50	11.50	25.00	1.12	10.00	4.75	2.875	2.45	3.00	0.750
N587USS	14.50	11.50	25.00	1.12	10.00	4.75	2.375	2.021	3.00	0.625
5810UZ	14.50	11.50	36.00	1.20	10.00	11.62	5.250	4.55	10.00	1.250
5810US	14.50	11.50	36.00	1.20	10.00	6.75	3.625	3.134	5.00	0.875
5810USS	14.50	11.50	36.00	1.20	10.00	6.75	2.375	2.021	5.00	0.625

Appendix B - Frame Mounting

Enclosure	ODP	TEFC	TEXP	TEFC	ODP	TEFC	TEFC	TEFC
Eff. Type	High Eff., Prem. Eff,	SD, 840, 841	Global	Quarry Duty	Dry Kiln	JM/JP, Cooling Tower	Brake	OWP
Frame	Mounting	Mounting	Mounting	Mounting	Mounting	Mounting	Mounting	Mounting
56	N/A	Dual Mount 56/56H	N/A	N/A	N/A	N/A	N/A	N/A
143	Not Dual Mount	Dual Mount - 143/145	Dual Mount - 143/145	N/A	N/A	Dual Mount - 143/145	Dual Mount - 143/145	N/A
145	Not Dual Mount	Dual Mount - 143/145	Dual Mount - 143/145	N/A	N/A	Dual Mount - 143/145	Dual Mount - 143/145	N/A
182	Not Dual Mount	Dual Mount - 182/184	Dual Mount - 182/184	N/A	N/A	Dual Mount - 182/184	Dual Mount - 182/184	N/A
184	Not Dual Mount	Dual Mount - 182/184	Dual Mount - 182/184	Dual Mount - 182/184	N/A	Dual Mount - 182/184	Dual Mount - 182/184	N/A
213	Not Dual Mount	Dual Mount - 213/215	Dual Mount - 213/215	Dual Mount - 213/215	N/A	Dual Mount - 213/215	Dual Mount - 213/215	N/A
215	Not Dual Mount	Dual Mount - 213/215	Dual Mount - 213/215	Dual Mount - 213/215	Not Dual Mount	Dual Mount - 213/215	Dual Mount - 213/215	Dual Mount - 213/215
254	Not Dual Mount	Dual Mount - 254/256	Dual Mount - 254/256	Dual Mount - 254/256	Not Dual Mount	Dual Mount - 254/256	Dual Mount - 254/256	Dual Mount - 254/256
256	Not Dual Mount	Dual Mount - 254/256	Dual Mount - 254/256	Dual Mount - 254/256	Not Dual Mount	Dual Mount - 254/256	Dual Mount - 254/256	Dual Mount - 254/256
284	Not Dual Mount	Dual Mount - 284/286	Dual Mount - 284/286	Dual Mount - 284/286	Not Dual Mount	Dual Mount - 284/286	Dual Mount - 284/286	Dual Mount - 284/286
286	Not Dual Mount	Dual Mount - 284/286	Dual Mount - 284/286	Dual Mount - 284/286	Not Dual Mount	Dual Mount - 284/286	Dual Mount - 284/286	Dual Mount - 284/286
324	Not Dual Mount	Dual Mount - 324/326	Dual Mount - 324/326	Dual Mount - 324/326	Not Dual Mount	Dual Mount - 324/326	N/A	Dual Mount - 324/326
326	Not Dual Mount	Dual Mount - 324/326	Dual Mount - 324/326	Dual Mount - 324/326	Not Dual Mount	Dual Mount - 324/326	N/A	Dual Mount - 324/326
364	Not Dual Mount	Dual Mount - 364/365	Dual Mount - 364/365	Dual Mount - 364/365	Not Dual Mount	Dual Mount - 364/365	N/A	Dual Mount - 364/365
365	Not Dual Mount	Dual Mount - 364/365	Dual Mount - 364/365	Dual Mount - 364/365	Not Dual Mount	Dual Mount - 364/365	N/A	Dual Mount - 364/365
404	Not Dual Mount	Dual Mount - 404/405	Dual Mount - 404/405	Dual Mount - 404/405	N/A	N/A	N/A	Dual Mount - 404/405
405	Not Dual Mount	Dual Mount - 404/405	Dual Mount - 404/405	Dual Mount - 404/405	N/A	N/A	N/A	Dual Mount - 404/405
444	Not Dual Mount	Dual Mount - S444/445	Dual Mount - 444/445	Dual Mount - 444/445	N/A	N/A	N/A	Dual Mount - S444/445
445	Not Dual Mount	Dual Mount - S445/447	Dual Mount - 444/445	Dual Mount - 444/445	N/A	N/A	N/A	N/A
447	Not Dual Mount	Dual Mount - S445/447	Not Dual Mount	N/A	N/A	N/A	N/A	N/A
N447	N/A	Dual Mount N447/N449	N/A	N/A	N/A	N/A	N/A	N/A
449	Not Dual Mount	N/A	N/A	N/A	N/A	N/A	N/A	N/A
S449	N/A	Dual Mount - S447/449	Dual Mount - S447/449	N/A	N/A	N/A	N/A	N/A
B449	N/A	Dual Mount - B447/449	Dual Mount - B447/449	N/A	N/A	N/A	N/A	N/A
N449	N/A	Dual Mount - N447/N449	Dual Mount - N447/N449	N/A	N/A	N/A	N/A	N/A
505	Not Dual Mount	Not Dual Mount	N/A	Not Dual Mount	N/A	N/A	N/A	N/A
507	Not Dual Mount	Not Dual Mount	N/A	N/A	N/A	N/A	N/A	N/A
509	Not Dual Mount	N/A	Not Dual Mount	N/A	N/A	N/A	N/A	N/A
5010	N/A	Not Dual Mount	N/A	Not Dual Mount	N/A	N/A	N/A	N/A
5011	N/A	Triple Mount - 5009/10/11	N/A	N/A	N/A	N/A	N/A	N/A
587	N/A	N/A	N/A	N/A	N/A	N/A	N/A	N/A
N587	N/A	N/A	N/A	Not Dual Mount	N/A	N/A	N/A	N/A
5810	Not Dual Mount	Dual Mount - 5809/5810	Not Dual Mount	Dual Mount - 5809/5810	N/A	N/A	N/A	N/A
5811	N/A	Triple Mount - 5809/10/11	Not Dual Mount	N/A	N/A	N/A	N/A	N/A

Appendix C
UL & CSA Explosion Proof Classifications

CAUTION!

Motors that are misused in hazardous environments can cause a fire or explosion, resulting in destruction of property, serious injury, or death. **Only the end user or a qualified underwriter should identify and select the appropriate motor class, group, division, and temperature code to meet the requirements of each installation.** Toshiba can only advise what listings and approvals Toshiba motors carry. Toshiba cannot evaluate nor recommend what motors may be suitable for use in hazardous environments.

Hazardous Locations:
For details on area classification and equipment suitability, please consult NFPA70™ National Electric Code® Articles 500 to 516.

- **Class I Group C** — locations containing flammable gas, flammable liquid-produced vapor, or combustible liquid-produced vapor mixed with air that may burn or explode, having either a maximum experimental safe gap (MESG) value greater than 0.45 mm and less than or equal to 0.75 mm, or a minimum igniting current ratio (MIC ratio) greater than 0.40 and less than or equal to 0.80. Please consult NFPA 497 for substances and additional information related to this group.
- **Class I Group D** — locations containing flammable gas, flammable liquid-produced vapor, or combustible liquid-produced vapor mixed with air that may burn or explode, having either a maximum experimental safe gap (MESG) value greater than 0.75 mm or a minimum igniting current ratio (MIC ratio) greater than 0.80. Please consult NFPA 497 for substances and additional information related to this group.
- **Class II Group E** — locations with atmospheres containing combustible metal dusts, including aluminum, magnesium, and their commercial alloys, or other combustible dusts whose particle size, abrasiveness, and conductivity present similar hazards in the use of electrical equipment. Please consult NFPA 499 for substances and additional information related to this group.
- **Class II Group F** — locations with atmospheres containing combustible carbonaceous dusts that have more than 8% total entrapped volatiles or that have been sensitized by other materials so that they present an explosion hazard. Coal, carbon black, charcoal, and coke dusts are examples of carbonaceous dusts. Please consult NFPA 499 for other substances and additional information related to this group.
- **Class II Group G** — locations with atmospheres containing combustible dusts not included in Group E or F, including flour, grain, wood, plastic, and chemicals. Please consult NFPA 499 for substances and additional information related to this group.

Class II Temperature Codes:
The temperature marking shall be less than the ignition temperature of the specific dust to be encountered. For organic dusts that may dehydrate or carbonize, the temperature marking shall not exceed the lower of either the ignition temperature or 165°C (329°F). Due to the low surface temperature requirements (higher temperature codes) mandated in Class II F & G, over temperature protection must be used.

- All Toshiba Explosion Proof motors are equipped with an internally-mounted, normally-closed winding thermostat.

Surface Temperatures:
Surface temperatures of Toshiba's Explosion Proof motors shall not exceed the following UL and CSA maximums under fault conditions. The below temperature class (T Code) identifies the maximum motor surface temperature that will be developed under all operating conditions.

- Division 1 considers external surface temperature and includes overloads and locked rotor conditions.
- Division 2 considers internal and external surface temperatures during normal operation.

T Code	Maximum Motor Surface Temperature	
	°C	°F
T1	450°	842°
T2	300°	572°
T2A	280°	536°
T2B	260°	500°
T2C	230°	446°
T2D	215°	419°
T3	200°	392°

T Code	Maximum Motor Surface Temperature	
	°C	°F
T3A	180°	356°
T3B	165°	329°
T3C	160°	320°
T4	135°	275°
T4A	120°	248°
T5	100°	212°
T6	85°	185°

Additional Notes:
- Stock motors are not suitable for applications in temperatures below -25°C (-13°F). Contact Toshiba for further information.
- All Toshiba Explosion Proof motors are supplied with Explosion Proof UL- and CSA-approved conduit boxes as standard.
- Inverter-duty Explosion Proof motors are available; contact Toshiba for further information.

Appendix C
Inverter Capabilities

Motor ASD Capabilities & Application Details

	Frame	56-447	56-145	182-215	254-286	324-365	404-447	449	500	5000	5800
General Purpose	Pole Speed	2 & 8 Pole	4 & 6 Pole	4 & 6 Pole	4 & 6 Pole	4 & 6 Pole	4 & 6 Pole	2, 4, & 6 Pole	2, 4, & 6 Pole	2, 4, & 6 Pole	2, 4, & 6 Pole
Inverter Duty	Global										
	ODP	2:1CT 60:1VT	-	-	-	-	2:1CT 60:1VT	2:1CT 60:1VT	2:1CT 60:1VT	2:1CT 60:1VT	2:1CT 60:1VT
	SD & 840*	10:1CT 60:1VT	20:1CT 60:1VT	20:1CT 60:1VT	20:1CT 60:1VT	20:1CT 60:1VT	20:1CT 60:1VT	10:1CT 60:1VT	10:1CT 60:1VT	10:1CT 60:1VT	10:1CT 60:1VT
	SD & 840**	-	-	-	-	-	-	-	-	3:1CT 60:1VT	3:1CT 60:1VT
	841	10:1CT 60:1VT	20:1CT 60:1VT	20:1CT 60:1VT	20:1CT 60:1VT	20:1CT 60:1VT	20:1CT 60:1VT	10:1CT 60:1VT	N/A	N/A	N/A
Definite Purpose	Brake, Cooling Tower, JM/JP										
	TEFC	10:1CT 60:1VT	20:1CT 60:1VT	20:1CT 60:1VT	20:1CT 60:1VT	20:1CT 60:1VT	N/A	N/A	N/A	N/A	N/A
Quarry Duty											
	TEFC*	N/A	N/A	20:1CT 60:1VT	20:1CT 60:1VT	20:1CT 60:1VT	N/A	N/A	10:1CT 60:1VT	10:1CT 60:1VT	10:1CT 60:1VT
	TEFC**	N/A	N/A	-	-	-	N/A	N/A	-	3:1CT 60:1VT	3:1CT 60:1VT
Vertical P-Base											
	TEFC	10:1CT 60:1VT	20:1CT 60:1VT	20:1CT 60:1VT	20:1CT 60:1VT	20:1CT 60:1VT	20:1CT 60:1VT	10:1CT 60:1VT	N/A	N/A	N/A

CT-Product	Frame	All	56-140	180-210	250-280	320-360	400-440	449	500-5000
General Purpose	Pole Speed	2 Pole	4 & 6 Pole	4 & 6 Pole	4 & 6 Pole	4 & 6 Pole	4 & 6 Pole	4 & 6 Pole	4 & 6 Pole
Inverter Ready	Premium								
	ODP	4:1CT 1000:1VT	4:1CT 1000:1VT	4:1CT 1000:1VT	4:1CT 1000:1VT	4:1CT 1000:1VT	4:1CT 1000:1VT	4:1CT 1000:1VT	N/A
	TEFC	4:1CT 1000:1VT	4:1CT 1000:1VT	4:1CT 1000:1VT	4:1CT 1000:1VT	4:1CT 1000:1VT	4:1CT 1000:1VT	4:1CT 1000:1VT	N/A

*Maximum 400HP for 5000 frame. Maximum 600HP for 5800 frame
** Maximum 500HP for 5000 frame. Maximum 800HP for 5800 frame

- Service factor rating will be 1.0 S.F. when operated on an ASD per NEMA MG1 Parts 30 & 31.
- Maximum safe operating speeds shall not exceed those limits listed in NEMA MG1 Part 30 Table 30-1. For over speed requirement exceeding the values listed in NEMA Table 30-1, contact Toshiba.

Appendix C
Division 2 Motors

TEFC EQP Global SD, 840, 841, Close-Coupled Pump, Cooling Tower, and Vertical P-Base NEMA Premium Efficiency motors are now CSA certified for Division 2, Class I, Group A, B, C, and D for sine wave and inverter duty power. They also include equivalent Zone markings for Class I Zone 2, Groups IIA, IIB, and IIC for sinewave and inverter duty power.

Division 2 Temperature-codes are provided in the standard format per the NEC Article 500 requirements. Equivalent Zone Temp-codes are provided in the "T-code = °C" format because NEC Article 505 does not allow all temp.-codes permitted by NEC 500. Inverter temp.-codes are provided in the "T-code = °C" format because they apply to both the equivalent Zone (NEC 505) requirements and NEC 500 requirements.

Please reference the table below for temperature and temp-code values.

US (NEC 500) CA (CEC Annex J)	US (NEC 505) CA (CEC Section 18)	Maximum Motor Surface Temperature °C
T1	T1	450° C
T2	T2	300° C
T2A	-	280° C
T2B	-	260° C
T2C	-	230° C
T2D	-	215° C
T3	T3	200° C
T3A	-	180° C
T3B	-	165° C
T3C	-	160° C
T4	T4	135° C
T4A	-	120° C
T5	T5	100° C
T6	T6	85° C

NOTES:

1) All max. HPs provided above are for a 60 Hz base. 50 Hz HPs must be derated by 5/6 of the 60 Hz HP and rounded to the nearest standard offering for 400 frames and above. For special 50 Hz requests not covered in this table, please contact Toshiba.
2) T-Codes will change with a warmer ambient temperature above 40 °C. Consult Factory for changes.
3) T-Code change not required for the above ratings when Division 2 space heater arrangements are added.
4) Consult Toshiba for 8-pole inverter duty power.

Class I, Division 2, Groups A, B, C, D								
SD/840/841/ Close-Coupled Pump/ Cooling Tower/Vertical P-Base			Sine Wave		Inverter Power 1.0 S.F.			
HP	Speed (RPM)	Frame	Temp Code 1.0 S.F.	Temp Code 1.15 S.F.	Inverter Temp Code	V.T. Speed Range (Hz)	C.T. Speed Range (Hz)	CHP Speed Range (Hz)
1	1800	143T	T4A	T4A	T4	1 - 60	6 - 60	60 - 90
1	1200	145T	T4A	T4A	T4	1 - 60	6 - 60	60 - 90
1.5	3600	143T	T4A	T4A	T4	1 - 60	6 - 60	60 - 90
1.5	1800	145T	T4A	T4A	T4	1 - 60	6 - 60	60 - 90
1.5	1200	182T	T4A	T4A	T4	1 - 60	6 - 60	60 - 90
2	3600	145T	T4A	T4A	T4	1 - 60	6 - 60	60 - 90
2	1800	145T	T4A	T4A	T4	1 - 60	6 - 60	60 - 90
2	1200	184T	T4A	T4A	T4	1 - 60	6 - 60	60 - 90
3	3600	182T	T4A	T4A	T4	1 - 60	6 - 60	60 - 90
3	1800	182T	T4A	T4A	T4	1 - 60	6 - 60	60 - 90
3	1200	213T	T3C	T3	T3	1 - 60	6 - 60	60 - 90
5	3600	184T	T4A	T4A	T4	1 - 60	6 - 60	60 - 90
5	1800	184T	T4A	T4A	T4	1 - 60	6 - 60	60 - 90
5	1200	215T	T3C	T3	T3	1 - 60	6 - 60	60 - 90
7.5	3600	213T	T3C	T3	T3	1 - 60	6 - 60	60 - 90
7.5	1800	213T	T3C	T3	T3	1 - 60	6 - 60	60 - 90
7.5	1200	254T	T3C	T3	T3	1 - 60	6 - 60	60 - 90
10	3600	215T	T3C	T3	T3	1 - 60	6 - 60	60 - 90
10	1800	215T	T3C	T3	T3	1 - 60	6 - 60	60 - 90
10	1200	256T	T3C	T3	T3	1 - 60	6 - 60	60 - 90
15	3600	254T	T3C	T3	T3	1 - 60	6 - 60	60 - 90
15	1800	254T	T3C	T3	T3	1 - 60	6 - 60	60 - 90
15	1200	284T	T3C	T3	T3	1 - 60	6 - 60	60 - 90
20	3600	256T	T3C	T3	T3	1 - 60	6 - 60	60 - 90
20	1800	256T	T3C	T3	T3	1 - 60	6 - 60	60 - 90
20	1200	286T	T3C	T3	T3	1 - 60	6 - 60	60 - 90
25	3600	284TS	T3C	T3	T3	1 - 60	6 - 60	60 - 90
25	1800	284T	T3C	T3	T3	1 - 60	6 - 60	60 - 90
25	1200	324T	T3C	T3	T3	1 - 60	6 - 60	60 - 90
30	3600	286TS	T3C	T3	T3	1 - 60	6 - 60	60 - 90
30	1800	286T	T3C	T3	T3	1 - 60	6 - 60	60 - 90
30	1200	326T	T3C	T3	T3	1 - 60	6 - 60	60 - 90
40	3600	324TS	T3C	T3	T3	1 - 60	6 - 60	60 - 90
40	1800	324T	T3C	T3	T3	1 - 60	6 - 60	60 - 90
40	1200	364T	T3C	T3	T3	1 - 60	6 - 60	60 - 90
50	3600	326TS	T3C	T3	T3	1 - 60	6 - 60	60 - 90
50	1800	326T	T3C	T3	T3	1 - 60	6 - 60	60 - 90
50	1200	365T	T3C	T3	T3	1 - 60	6 - 60	60 - 90
60	3600	364TS	T3C	T3	T3	1 - 60	6 - 60	60 - 90
60	1800	364T	T3C	T3	T3	1 - 60	6 - 60	60 - 90
60	1200	404T	T3C	T3	T3	1 - 60	6 - 60	60 - 90
75	3600	365TS	T3C	T3	T3	1 - 60	6 - 60	60 - 90
75	1800	365T	T3C	T3	T3	1 - 60	6 - 60	60 - 90
75	1200	405T	T3C	T3	T3	1 - 60	6 - 60	60 - 90
100	3600	405TS	T3C	T3	T3	1 - 60	6 - 60	60 - 90
100	1800	405T	T3C	T3	T3	1 - 60	6 - 60	60 - 90
100	1200	444T	T3C	T3	T3	1 - 60	6 - 60	60 - 90
125	3600	444TS	T3C	T3	T3	1 - 60	6 - 60	60 - 90
125	1800	444T	T3C	T3	T3	1 - 60	6 - 60	60 - 90
125	1200	445T	T3C	T3	T3	1 - 60	6 - 60	60 - 90
150	3600	445TS	T3C	T3	T3	1 - 60	6 - 60	60 - 90
150	1800	445T	T3C	T3	T3	1 - 60	6 - 60	60 - 90
150	1200	447T	T3C	T3	T3	1 - 60	6 - 60	60 - 90
200	3600	447TS	T3C	T3	T3	1 - 60	6 - 60	60 - 90
200	1800	447T	T3C	T3	T3	1 - 60	6 - 60	60 - 90
200	1200	N449T	T3C	T3	T3	1 - 60	6 - 60	60 - 90
200	1200	505US	T3	T3	T2D	1 - 60	6 - 60	60 - 90
250	3600	N449TS	T3	T2D	T3	1 - 60	6 - 60	60 - 90
250	3600	5010USS	T3	T3	T2D	1 - 60	6 - 60	60 - 90
250	1800	N449T	T3	T2D	T3	1 - 60	6 - 60	60 - 90
250	1800	505US/Z	T3	T3	T2D	1 - 60	6 - 60	60 - 90
250	1200	N449T	T3	T2D	T3	1 - 60	6 - 60	60 - 90
250	1200	5010US/Z	T3	T3	T2D	1 - 60	6 - 60	60 - 90
300	3600	N449TS	T3	T2D	T3	1 - 60	6 - 60	60 - 90
300	3600	5010USS	T3	T3	T2D	1 - 60	6 - 60	60 - 90
300	1800	N449T	T3	T2D	T3	1 - 60	6 - 60	60 - 90
300	1800	5010US/Z	T3	T3	T2D	1 - 60	6 - 60	60 - 90
300	1200	N449T	T3	T2D	T3	1 - 60	6 - 60	60 - 90
300	1200	5010US/Z	T3	T3	T2D	1 - 60	6 - 60	60 - 90
350	3600	N449TS	T3	T2D	T3	1 - 60	6 - 60	60 - 90
350	3600	5010USS	T3	T3	T2D	1 - 60	6 - 60	60 - 90
350	1800	N449T	T3	T2D	T3	1 - 60	6 - 60	60 - 90
350	1800	5010US/Z	T3	T3	T2D	1 - 60	6 - 60	60 - 90
350	1200	N449T	T3	T2D	T3	1 - 60	6 - 60	60 - 90
350	1200	5010US/Z	T3	T3	T2D	1 - 60	6 - 60	60 - 90
350	1200	5011US/Z	T3	T3	T2D	1 - 60	6 - 60	60 - 90
400	3600	5010USS	T3	T3	T2D	1 - 60	6 - 60	60 - 90
400	3600	5011USS	T3	T3	T2D	1 - 60	6 - 60	60 - 90
400	1800	5010US/Z	T3	T3	T2D	1 - 60	6 - 60	60 - 90
400	1800	5011US/Z	T3	T3	T2D	1 - 60	6 - 60	60 - 90
400	1200	5010US/Z	T3	T3	T2D	1 - 60	6 - 60	60 - 90
450	3600	5010USS	T3	T3	T2C	1 - 60	20 - 60	60 - 90
450	3600	5011USS	T3	T3	T2C	1 - 60	20 - 60	60 - 90
450	1800	5010US/Z	T3	T3	T2C	1 - 60	20 - 60	60 - 90
450	1800	5011US/Z	T3	T3	T2C	1 - 60	20 - 60	60 - 90
450	1200	5810US/Z	T3	T3	T2C	1 - 60	6 - 60	60 - 90
500	3600	5010USS	T3	T3	T2C	1 - 60	20 - 60	60 - 90
500	3600	5011USS	T3	T3	T2C	1 - 60	20 - 60	60 - 90
500	1800	5011US/Z	T3	T3	T2C	1 - 60	20 - 60	60 - 90
500	1200	5810US/Z	T3	T3	T2C	1 - 60	6 - 60	60 - 90
600	1800	5810US/Z	T3	T3	T2C	1 - 60	6 - 60	60 - 90
600	1200	5810US/Z	T3	T3	T2C	1 - 60	6 - 60	60 - 90
700	1800	5810US/Z	T3	T3	T3B	1 - 60	20 - 60	60 - 90
700	1200	5811USS	T3	T3	T3B	1 - 60	20 -60	60 - 90
800	3600	5811USS	T3	T3	T3B	1 - 60	20 - 60	60 - 90

Appendix D
Low Voltage Motor IEC 60034-30 Standard for Efficiency Classes

IEC Efficiency Table

kW (50Hz)	IE2 High Efficiency				IE3 Premium Efficiency				IE4 Super Premium Efficiency			
	2-Pole	4-Pole	6-Pole	8-Pole	2-Pole	4-Pole	6-Pole	8-Pole	2-Pole	4-Pole	6-Pole	8-Pole
0.55	74.1	77.1	73.1	61.7	77.8	80.8	77.2	73.0	81.5	83.9	80.9	77.0
0.75	77.4	79.6	75.9	66.2	80.7	82.5	78.9	75.0	83.5	85.7	82.7	78.4
1.1	79.6	81.4	78.1	70.8	82.7	84.1	81.0	77.7	85.2	87.2	84.5	80.8
1.5	81.3	82.8	79.8	74.1	84.2	85.3	82.5	79.7	86.5	88.2	85.9	82.6
2.2	83.2	84.3	81.8	77.6	85.9	86.7	84.3	81.9	88.0	89.5	87.4	84.5
3	84.6	85.5	83.3	80.0	87.1	87.7	85.6	83.5	89.1	90.4	88.6	85.9
4	85.8	86.6	84.6	81.9	88.1	88.6	86.8	84.8	90.0	91.1	89.5	87.1
5.5	87.0	87.7	86.0	83.8	89.2	89.6	88.0	86.2	90.9	91.9	90.5	88.3
7.5	88.1	88.7	87.2	85.3	90.1	90.4	89.1	87.3	91.7	92.6	91.3	89.3
11	89.4	89.8	88.7	86.9	91.2	91.4	90.3	88.6	92.6	93.3	92.3	90.4
15	90.3	90.6	89.7	88.0	91.9	92.1	91.2	89.6	93.3	93.9	92.9	91.2
18.5	90.9	91.2	90.4	88.6	92.4	92.6	91.7	90.1	93.7	94.2	93.4	91.7
22	91.3	91.6	90.9	89.1	92.7	93.0	92.2	90.6	94.0	94.5	93.7	92.1
30	92.0	92.3	91.7	89.8	93.3	93.6	92.9	91.3	94.5	94.9	94.2	92.7
37	92.5	92.7	92.2	90.3	93.7	93.9	93.3	91.8	94.8	95.2	94.5	93.1
45	92.9	93.1	92.7	90.7	94.0	94.2	93.7	92.2	95.0	95.4	94.8	93.4
55	93.2	93.5	93.1	91.0	94.3	94.6	94.1	92.5	95.3	95.7	95.1	93.7
75	93.8	94.0	93.7	91.6	94.7	95.0	94.6	93.1	95.6	96.0	95.4	94.2
90	94.1	94.2	94.0	91.9	95.0	95.2	94.9	93.4	95.8	96.1	95.6	94.4
110	94.3	94.5	94.3	92.3	95.2	95.4	95.1	93.7	96.0	96.3	95.8	94.7
132	94.6	94.7	94.6	92.6	85.4	95.6	95.4	94.0	96.2	96.4	96.0	94.9
160	94.8	94.9	94.8	93.0	95.6	95.8	95.6	94.3	96.3	96.6	96.2	95.1
200	95.0	95.1	95.0	93.5	95.8	96.0	95.8	94.6	96.5	96.7	96.3	95.4
250	95.0	95.1	95.0	93.5	95.8	96.0	95.8	94.6	96.5	96.7	96.5	95.4
315	95.0	95.1	95.0	93.5	95.8	96.0	95.8	94.6	96.5	96.7	96.6	95.4
355	95.0	95.1	95.0	93.5	95.8	96.0	95.8	94.6	96.5	96.7	96.6	95.4
400	95.0	95.1	95.0	93.5	95.8	96.0	95.8	94.6	96.5	96.7	96.6	95.4

Appendix E
IEC Motors

IEC Quick Reference Chart

IEC Frames	Mounting					Shaft					
	A	B	C	H	K	D	E	F	G	DB	EG
63	100	80	40	63	7	11	23	3	8.5	M4	10
71	112	90	45	71	7	14	30	5	11	M5	12.5
80	125	100	50	80	10	19	40	6	15.5	M6	16
90S	140	100	56	90	10	24	50	8	20	M8	19
90L	140	125	56	90	10	24	50	8	20	M8	19
100L	160	140	63	100	12	28	60	8	24	M10	22
112M	190	140	70	112	12	28	60	8	24	M10	22
132S	216	140	89	132	12	38	80	10	33	M12	28
132M	216	178	89	132	12	38	80	10	33	M12	36
160M	254	210	108	160	15	42	110	12	37	M16	36
160L	254	254	108	160	15	42	110	12	37	M16	36
180M	279	241	121	180	15	48	110	14	42.5	M16	36
180L	279	279	121	180	15	48	110	14	42.5	M16	36
200L	318	305	133	200	19	55	110	16	49	M20	42
225S	356	286	149	225	19	60	140	18	53	M20	42
225S -2P	356	286	149	225	19	55	110	16	49	M20	42
225M	356	311	149	225	19	60	140	18	53	M20	42
225M - 2p	356	311	149	225	19	55	110	16	49	M20	42
250S	406	311	168	250	24	65	140	18	58	M20	42
250S -2p	406	311	168	250	24	60	140	18	53	M20	42
250M	406	349	168	250	24	65	140	18	58	M20	42
250M - 2P	406	349	168	250	24	60	140	18	53	M20	42
280S	457	368	190	280	24	75	140	20	67.5	M20	42
280S - 2P	457	368	190	280	24	65	140	18	58	M20	42
280M	457	419	190	280	24	75	140	20	67.5	M20	42
280M - 2P	457	419	190	280	24	65	140	18	58	M20	42
315S	508	406	216	315	28	80	170	22	71	M20	42
315S - 2p	508	406	216	315	28	65	140	18	58	M20	48
315M	508	457	216	315	28	80	170	22	71	M21	48
315M - 2p	508	457	216	315	28	65	140	18	58	M22	48

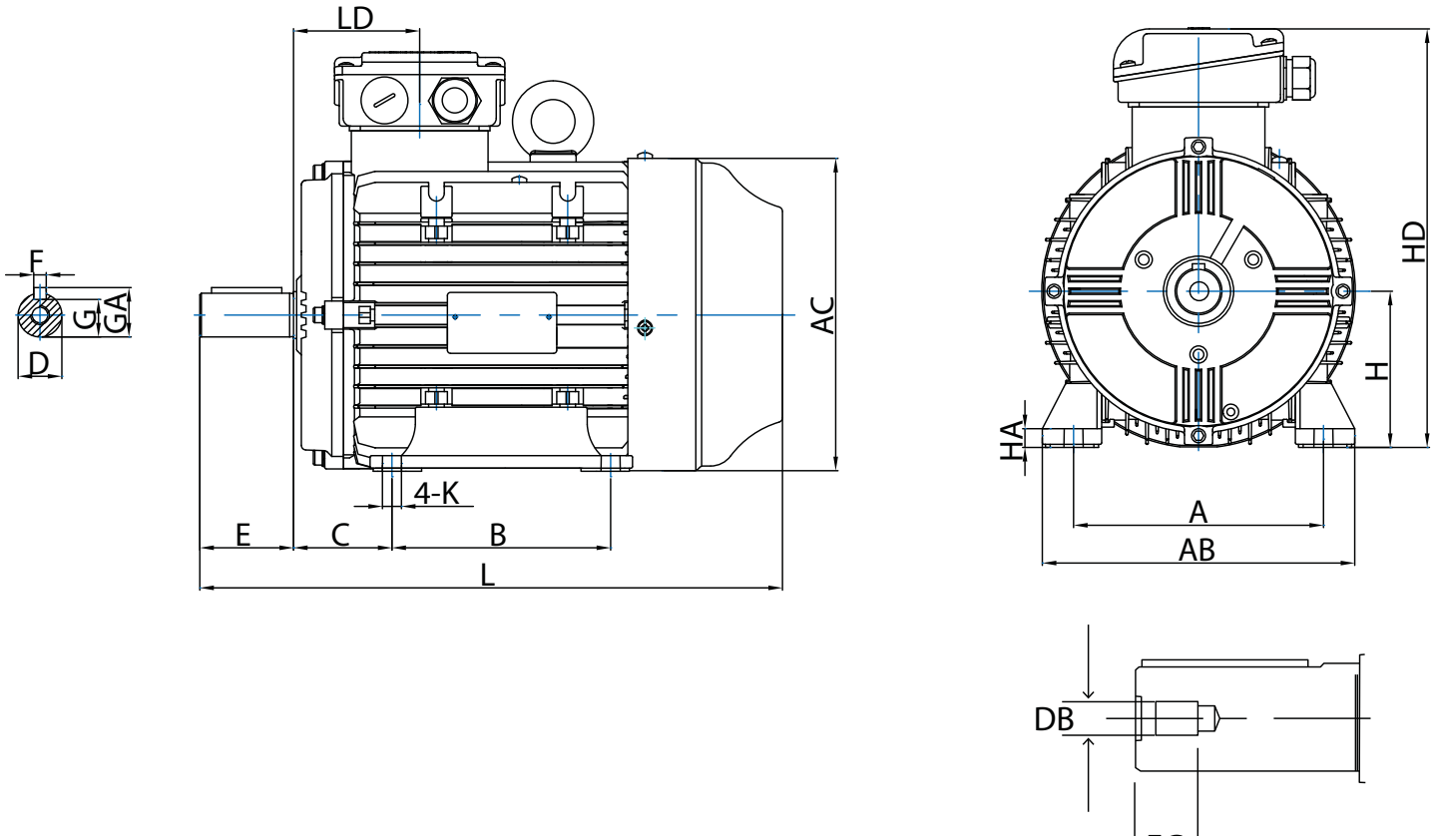

Toshiba Drives

ONE STOP FOR ALL YOUR ADJUSTABLE SPEED DRIVE NEEDS

Toshiba is a leading manufacturer of low and medium voltage adjustable speed drives ranging from 1/2 to 11,000 HP and 230 to 6,600 V. Our extensive adjustable speed drive product offering and large installed base in numerous industries demonstrates our customers' confidence in choosing Toshiba drives. Since our products are manufactured under one roof, we offer customized solutions to meet your application needs. We also have the capability to test our products together, as a complete system, before it goes out into the field—ensuring the highest level of quality, performance, and reliability.

Low Voltage Drives AS3 ASD

NEW PRODUCT

Specifications

Toshiba's AS3 adjustable speed drive is designed with an emphasis on built-in communications, allowing end-users to access real-time data and refined controls to maximize system performance.

Product Scope

200 to 240 V at 0.5 to 75 HP HD (1 to 100 HP ND)
380 to 480 V at 0.5 to 450 HP HD (1 to 500 HP ND)

Highlights

- Dual Rating through Parameter Change (Heavy Duty and Normal Duty)
  - o Heavy Duty 150% Overload for 60 Seconds
  - o Normal Duty 120% Overload for 60 Seconds
- Eight Programmable Digital Inputs
- Three Programmable Digital Outputs: One Form-C Relay & Two Form-A Dry Contact Relays
- Three Programmable Analog Inputs: One 4 to 20mA, One 0 to 10 VDC, & One +10 VDC
- Two Programmable Analog Outputs: Both 4 to 20mA or 0 to 10 VDC
- Embedded STO Safety Terminal Compliant with IEC 61800-5-2 and SIL3 level in IEC 61508
- Two-Wire/Four-Wire RS485
- Built-in Dual Port Ethernet IP
- Embedded Web Server
- Real-Time Clock for Past Trip Monitoring or Calendar Functionality
- QR Code Display for Additional Parameter Information and Fault Troubleshooting

Standard Features

- NEMA 1 up to 100 HP HD (125 HP ND) 460 V
- Ambient Temperature: 14° to 122°F (-10° to +50°C) or 140°F (+60°C) with Derate
- Altitude: Up to 1000 Meters Without Derate
- Humidity: 95% Non-Condensing
- Advanced LCD Keypad with Capacitive Touch Wheel for Navigating and Programming
- Save, Restore & Clone Multiple Drive Settings
- Real Time Clock for Past Trip Monitoring or Calendar Functionality
- Built-Dynamic Braking Drive Circuit Up to 100 HP HD (125 HP ND) 460 V
- All Models Include DC Link Reactor

AS3 ASD

230 V Power Unit
Pricing & Dimensions

VAC	HP (HD)	FLA (HD)	Model Number	List Price	Frame	H	W	D	Shipping Weight (lbs.)
						Dimensions (in.)			
Heavy Duty - 150% current overload for 60 seconds (Primarily used for constant torque applications. Examples are conveyors, crushers, extruders and mixers)									
120V Single Phase	DEMO	DEMO	VFAS3-DEMO	$750 NET	A1	13.8	5.7	8.0	9.5
230	0.5	3.3	VFAS3-2004P	$885	A1	13.8	5.7	8.0	9.5
230	1	4.6	VFAS3-2007P	$980	A1	13.8	5.7	8.0	9.5
230	2	8.0	VFAS3-2015P	$1,030	A1	13.8	5.7	8.0	9.9
230	3	11.2	VFAS3-2022P	$1,150	A1	13.8	5.7	8.0	10.1
230	5	18.7	VFAS3-2037P	$1,300	A2	16.2	6.7	9.2	17.0
230	7.5	25.4	VFAS3-2055P	$1,625	A3	21.8	8.3	9.2	30.4
230	10	32.7	VFAS3-2075P	$1,900	A3	21.8	8.3	9.2	30.4
230	15	46.8	VFAS3-2110P	$2,390	A4	27.3	8.9	10.7	60.2
230	20	63.4	VFAS3-2150P	$2,700	A4	27.3	8.9	10.7	60.2
230	25	78.4	VFAS3-2185P	$3,600	A4	27.3	8.9	10.7	60.2
230	30	92.6	VFAS3-2220P	$4,158	A5	36.8	11.5	12.7	127
230	40	123	VFAS3-2300P	$6,570	A5	36.8	11.5	12.7	127
230	50	149	VFAS3-2370P	$10,200	A5	36.8	11.5	12.7	127
230	60	176	VFAS3-2450P	$12,600	A6	33.5	12.7	15.4	181
230	75	211	VFAS3-2550P	$15,505	A6	33.5	12.7	15.4	181

VAC	HP (ND)	FLA (ND)	Model Number	List Price	Frame	H	W	D	Shipping Weight (lbs.)
						Dimensions (in.)			
Normal Duty - 120% current overload for 60 seconds (Primarily used for variable torque applications. Examples are fans, centrifugal pumps and blowers)									
120V Single Phase	DEMO	DEMO	VFAS3-DEMO	$750 NET	A1	13.8	5.7	8.0	9.5
230	1	4.6	VFAS3-2004P	$885	A1	13.8	5.7	8.0	9.5
230	2	8.0	VFAS3-2007P	$980	A1	13.8	5.7	8.0	9.5
230	3	11.2	VFAS3-2015P	$1,030	A1	13.8	5.7	8.0	9.9
230	5	18.7	VFAS3-2022P	$1,150	A1	13.8	5.7	8.0	10.1
230	7.5	25.4	VFAS3-2037P	$1,300	A2	16.2	6.7	9.2	17.0
230	10	32.7	VFAS3-2055P	$1,625	A3	21.8	8.3	9.2	30.4
230	15	46.8	VFAS3-2075P	$1,900	A3	21.8	8.3	9.2	30.4
230	20	63.4	VFAS3-2110P	$2,390	A4	27.3	8.9	10.7	60.2
230	25	78.4	VFAS3-2150P	$2,700	A4	27.3	8.9	10.7	60.2
230	30	92.6	VFAS3-2185P	$3,600	A4	27.3	8.9	10.7	60.2
230	40	123	VFAS3-2220P	$4,158	A5	36.8	11.5	12.7	127
230	50	149	VFAS3-2300P	$6,570	A5	36.8	11.5	12.7	127
230	60	176	VFAS3-2370P	$10,200	A5	36.8	11.5	12.7	127
230	75	211	VFAS3-2450P	$12,600	A6	33.5	12.7	15.4	181
230	100	282	VFAS3-2550P	$15,505	A6	33.5	12.7	15.4	181

Notes:
- Frame A6 and A8 units do not include a dynamic braking circuit. This is available as an option.
- Frame A6 and larger units are rated IP00. NEMA 1 conduit adapters are available as an option.

*DC link reactor attaches to top.

AS3 ASD

460 V Power Unit

Pricing & Dimensions

VAC	HP (HD)	FLA (HD)	Model Number	List Price	Frame	H	W	D	Shipping Weight (lbs.)
						Dimensions (in.)			
Heavy Duty - 150% current overload for 60 seconds (Primarily used for constant torque applications. Examples are conveyors, crushers, extruders and mixers)									
460	0.5	1.5	VFAS3-4004PC	$770	A1	13.8	5.7	8.0	9.9
460	1	2.2	VFAS3-4007PC	$873	A1	13.8	5.7	8.0	9.9
460	2	4.0	VFAS3-4015PC	$945	A1	13.8	5.7	8.0	9.9
460	3	5.6	VFAS3-4022PC	$1,020	A1	13.8	5.7	8.0	10.1
460	5	9.3	VFAS3-4037PC	$1,230	A1	13.8	5.7	8.0	10.4
460	7.5	12.7	VFAS3-4055PC	$1,500	A2	16.2	6.7	9.2	17.0
460	10	16.5	VFAS3-4075PC	$1,860	A2	16.2	6.7	9.2	17.0
460	15	23.5	VFAS3-4110PC	$2,400	A3	21.8	8.3	9.2	30.0
460	20	31.7	VFAS3-4150PC	$3,000	A3	21.8	8.3	9.2	31.3
460	25	39.2	VFAS3-4185PC	$3,720	A3	21.8	8.3	9.2	31.5
460	30	46.3	VFAS3-4220PC	$3,900	A4	27.3	8.9	10.7	61.7
460	40	61.5	VFAS3-4300PC	$4,705	A4	27.3	8.9	10.7	62.2
460	50	74.5	VFAS3-4370PC	$6,200	A4	27.3	8.9	10.7	63.3
460	60	88.0	VFAS3-4450PC	$7,485	A5	36.8	11.5	12.7	127
460	75	106	VFAS3-4550PC	$8,300	A5	36.8	11.5	12.7	130
460	100	145	VFAS3-4750PC	$10,200	A5	36.8	11.5	12.7	131
460	125	173	VFAS3-4900PC	$13,044	A6	33.5	12.7	15.4	181
460	150	211	VFAS3-4110KPC	$14,796	A6	33.5	12.7	15.4	181
460	200	250	VFAS3-4132KPC	$17,870	A6	33.5	12.7	15.4	181
460	250	314	VFAS3-4160KPC	$21,835	A7	47.0	17.3	14.8	366 (230)*
460	300	387	VFAS3-4200KPC	$25,438	A8	47.0	23.5	14.8	428 (296)*
460	350	427	VFAS3-4220KPC	$28,849	A8	47.0	23.5	14.8	450 (230)*
460	450	550	VFAS3-4280KPC	$39,765	A8	47.0	23.5	14.8	450 (230)*

Notes:
- Frame A6 and A8 units do not include a dynamic braking circuit. This is available as an option.
- Frame A6 and larger units are rated IP00. NEMA 1 conduit adapters are available as an option.

*DC link reactor attaches to top.

AS3 ASD

460 V Power Unit
Pricing & Dimensions

VAC	HP (ND)	FLA (ND)	Model Number	List Price	Frame	H	W	D	Shipping Weight (lbs.)
						Dimensions (in.)			
Normal Duty - 120% current overload for 60 seconds (Primarily used for variable torque applications. Examples are fans, centrifugal pumps and blowers)									
460	1	2.2	VFAS3-4004PC	$770	A1	13.8	5.7	8.0	9.9
460	2	4.0	VFAS3-4007PC	$873	A1	13.8	5.7	8.0	9.9
460	3	5.6	VFAS3-4015PC	$945	A1	13.8	5.7	8.0	9.9
460	5	9.3	VFAS3-4022PC	$1,020	A1	13.8	5.7	8.0	10.1
460	7.5	12.7	VFAS3-4037PC	$1,230	A1	13.8	5.7	8.0	10.4
460	10	16.5	VFAS3-4055PC	$1,500	A2	16.2	6.7	9.2	17.0
460	15	23.5	VFAS3-4075PC	$1,860	A2	16.2	6.7	9.2	17.0
460	20	31.7	VFAS3-4110PC	$2,400	A3	21.8	8.3	9.2	30.0
460	25	39.2	VFAS3-4150PC	$3,000	A3	21.8	8.3	9.2	31.3
460	30	46.3	VFAS3-4185PC	$3,720	A3	21.8	8.3	9.2	31.5
460	40	61.5	VFAS3-4220PC	$3,900	A4	27.3	8.9	10.7	61.7
460	50	74.5	VFAS3-4300PC	$4,705	A4	27.3	8.9	10.7	62.2
460	60	88.0	VFAS3-4370PC	$6,200	A4	27.3	8.9	10.7	63.3
460	75	106	VFAS3-4450PC	$7,485	A5	36.8	11.5	12.7	127
460	100	145	VFAS3-4550PC	$8,300	A5	36.8	11.5	12.7	130
460	125	173	VFAS3-4750PC	$10,200	A5	36.8	11.5	12.7	131
460	150	211	VFAS3-4900PC	$13,044	A6	33.5	12.7	15.4	181
460	200	250	VFAS3-4110KPC	$14,796	A6	33.5	12.7	15.4	181
460	250	302	VFAS3-4132KPC	$17,870	A6	33.5	12.7	15.4	181
460	350	427	VFAS3-4160KPC	$21,835	A7	47.0	17.3	14.8	366 (230)*
460	400	481	VFAS3-4200KPC	$25,438	A8	47.0	23.5	14.8	428 (296)*
460	450	550	VFAS3-4220KPC	$28,849	A8	47.0	23.5	14.8	450 (230)*
460	500	616	VFAS3-4280KPC	$39,765	A8	47.0	23.5	14.8	450 (230)*

Notes:
- Frame A6 and A8 units do not include a dynamic braking circuit. This is available as an option.
- Frame A6 and larger units are rated IP00. NEMA 1 conduit adapters are available as an option.

*DC link reactor attaches to top.

Low Voltage Drives
AS3 UL Type 12/IP55 ASD

NEW PRODUCT

Specifications

Toshiba's AS3 UL Type 12/IP55 adjustable speed drive is designed to withstand harsh environments and features built-in communications, allowing end-users to access real-time data and refined controls to maximize system performance.

Product Scope

- 1/2 to 100 HP (Heavy Duty)
- 1 to 125 HP (Normal Duty)
- 460 V
- Three-Phase Power

Highlights

- Type 12/IP55 Rated Enclosure
- Dual Rated Capacity
- 150% Overload for 60 Seconds (Heavy Duty)
- 120% Overload for 60 Seconds (Normal Duty)
- Built-in Dual Port Ethernet IP Communications
- Advanced IP65 Rated Full English Display LCD Keypad
- Permanent Magnet Motor Control
- Advanced Pump Control

Standard Features

- Ambient Temperature: 5° to 122°F (-15° to +50°C) (Derate Above 104°F or 40°C)
- Altitude: Up to 1000 Meters Without Derate
- Humidity: 95% Non-Condensing
- Advanced LCD Keypad with Capacitive Touch Wheel for Navigating and Programming
- Save, Restore & Clone Multiple Drive Settings
- Real Time Clock for Past Trip Monitoring or Calendar Functionality
- All Models Include a Built in Dynamic Braking Circuit
- All Models Include DC Link Reactor

AS3 UL Type 12/IP55 ASD

460 V Power Unit

Pricing & Dimensions

VAC	HP (HD)	FLA (HD)	Model Number	List Price	Frame	H	W	D	Shipping Weight (lbs.)
						Dimensions (in.)			
Heavy Duty - 150% current overload for 60 seconds (Primarily used for constant torque applications. Examples are conveyors, crushers, extruders and mixers)									
460	0.5	1.5	VFAS3-4004PCE	$1,194	A1E	29.3	9.9	10.7	30
460	1	2.2	VFAS3-4007PCE	$1,223	A1E	29.3	9.9	10.7	30
460	2	4.0	VFAS3-4015PCE	$1,323	A1E	29.3	9.9	10.7	30
460	3	5.6	VFAS3-4022PCE	$1,428	A1E	29.3	9.9	10.7	30
460	5	9.3	VFAS3-4037PCE	$1,907	A1E	29.3	9.9	10.7	30
460	7.5	12.7	VFAS3-4055PCE	$2,100	A2E	29.3	9.9	11.9	38
460	10	16.5	VFAS3-4075PCE	$2,604	A2E	29.3	9.9	11.9	38
460	15	23.5	VFAS3-4110PCE	$2,760	A3E	29.3	9.9	11.9	48
460	20	31.7	VFAS3-4150PCE	$3,450	A3E	29.3	9.9	11.9	48
460	25	39.2	VFAS3-4185PCE	$4,278	A3E	29.3	9.9	11.9	48
460	30	46.3	VFAS3-4220PCE	$4,485	A4E	40.0	11.5	13.4	115
460	40	61.5	VFAS3-4300PCE	$5,411	A4E	40.0	11.5	13.4	115
460	50	74.5	VFAS3-4370PCE	$7,130	A4E	40.0	11.5	13.4	115
460	60	88.0	VFAS3-4450PCE	$8,608	A5E	53.5	13.6	14.8	200
460	75	106	VFAS3-4550PCE	$9,545	A5E	53.5	13.6	14.8	200
460	100	145	VFAS3-4750PCE	$11,730	A5E	53.5	13.6	14.8	200

VAC	HP (ND)	FLA (ND)	Model Number	List Price	Frame	H	W	D	Shipping Weight (lbs.)
						Dimensions (in.)			
Normal Duty - 120% current overload for 60 seconds (Primarily used for variable torque applications. Examples are fans, centrifugal pumps and blowers)									
460	1	2.2	VFAS3-4004PCE	$1,194	A1E	29.3	9.9	10.7	30
460	2	4.0	VFAS3-4007PCE	$1,223	A1E	29.3	9.9	10.7	30
460	3	5.6	VFAS3-4015PCE	$1,323	A1E	29.3	9.9	10.7	30
460	5	9.3	VFAS3-4022PCE	$1,428	A1E	29.3	9.9	10.7	30
460	7.5	12.7	VFAS3-4037PCE	$1,907	A1E	29.3	9.9	10.7	30
460	10	16.5	VFAS3-4055PCE	$2,100	A2E	29.3	9.9	11.9	38
460	15	23.5	VFAS3-4075PCE	$2,604	A2E	29.3	9.9	11.9	38
460	20	31.7	VFAS3-4110PCE	$2,760	A3E	29.3	9.9	11.9	48
460	25	39.2	VFAS3-4150PCE	$3,450	A3E	29.3	9.9	11.9	48
460	30	46.3	VFAS3-4185PCE	$4,278	A3E	29.3	9.9	11.9	48
460	40	61.5	VFAS3-4220PCE	$4,485	A4E	40.0	11.5	13.4	115
460	50	74.5	VFAS3-4300PCE	$5,411	A4E	40.0	11.5	13.4	115
460	60	88.0	VFAS3-4370PCE	$7,130	A4E	40.0	11.5	13.4	115
460	75	106	VFAS3-4450PCE	$8,608	A5E	53.5	13.6	14.8	200
460	100	145	VFAS3-4550PCE	$9,545	A5E	53.5	13.6	14.8	200
460	125	173	VFAS3-4750PCE	$11,730	A5E	53.5	13.6	14.8	200

Low Voltage Drives AS3P ASD

Specifications

NEW PRODUCT

The durable AS3P adjustable speed drive (ASD) outdoor assembly is a short lead time product available at low costs by utilizing a standardized design and options. These include line reactors, surge arrestors and a maximum of four door-mounted control options. All units have a NEMA 3R outdoor rated free standing enclosure.

Product Scope

- 380 to 480 V at 7.5 to 200 HP HD (10 to 250 HP ND)

Highlights

- Dual Rating through Parameter Change (Heavy Duty and Normal Duty)
  - o Heavy Duty 150% Overload for 60 Seconds
  - o Normal Duty 120% Overload for 60 Seconds
- Eight Programmable Digital Inputs
- Three Programmable Digital Outputs: One Form-C Relay & Two Form-A Dry Contact Relays
- Three Programmable Analog Inputs: One 4 to 20mA, One 0 to 10 VDC, & One +10 VDC
- Two Programmable Analog Outputs: Both 4 to 20mA or 0 to 10 VDC
- Embedded STO Safety Terminal Compliant with IEC 61800-5-2 and SIL3 level in IEC 61508
- Two-Wire/Four-Wire RS485
- Built-in Dual Port Ethernet IP
- Embedded Web Server
- Real-Time Clock for Past Trip Monitoring or Calendar Functionality
- QR Code Display for Additional Parameter Information and Fault Troubleshooting

Standard Features

- NEMA 3R Outdoor Rated Enclosure Standard
- Ambient Temperature: 14° to 104°F (-10° to +40°C)
- Altitude: Up to 1000 Meters Without Derate
- Humidity: 95% Non-Condensing
- Advanced LCD Keypad with Capacitive Touch Wheel for Navigating and Programming
- Save, Restore & Clone Multiple Drive Settings
- Real Time Clock for Past Trip Monitoring or Calendar Functionality
- Built-Dynamic Braking Drive Circuit

Available Installed Options

- Input Line Reactor
- Surge Arrestor
- Door-Mounted Selector Switches
- Door-Mounted Push Buttons
- Door-Mounted Pilot Lights
- Cabinet Space Heater

AS3P ASD

Part Numbering Convention

The durable AS3P adjustable speed drive (ASD) outdoor assembly is a short lead time product available at low costs by utilizing a standardized design and options. These include line reactors, surge arrestors and a maximum of four door-mounted control options. All units have a NEMA 3R outdoor rated free standing enclosure.

Ordering Information: Use the following part numbering convention to configure the AS3P unit package when placing your order.

Example Part Number:	AS3P	4	###/###K	AA	#	*	*	*	*	*	*

Series:
AS3P - AS3P Style Assembly

Voltage:
4 - 460

Model Number:
055 – 7.5HP/10HP
075 – 10HP/15HP
110 – 15HP/20HP
150 – 20HP/25HP
185 – 25HP/30HP
220 – 30HP/40HP
300 – 40HP/50HP
370 – 50HP/60HP
450 – 60HP/75HP
550 – 75HP/100HP
750 – 100HP/125HP
900 – 125HP/ 150HP
110K – 150HP/200HP
132K – 200HP/250HP

Style:
AA - Includes Input Circuit Breaker

Reactor:
0 - No Line Reactor
3 - 3% AC Line Reactor
5 - 5% AC Line Reactor

Surge Arrestor:
0 - No Surge Arrestor
M - Basic (MOV) Surge Arrestor
S - Raycap Strikesorb Surge Arrestor

Space Heater:
0 - No Space Heater
T - Cabinet Space Heater with Thermostat

4 Door Mounted Pilot Device:
0 - No Option
A - 2 Position Switch, “LOCAL/REMOTE”
B - 3 Position Switch, “HAND/OFF/AUTO”
C - Pilot Light, White, “POWER ON”
D - Pilot Light, Amber, “ASD FAULT”
E - Pilot Light, Red, “ASD RUN”
F - Pilot Light, Green, “ASD STOPPED”
G - Push Button, Red, “RUN”
H - Push Button, Black, “STOP”
I - Push Button, Black, “RESET”
J - Push Button, Red, “EMERGENCY STOP”

AS3P ASD

460 V Assembly Unit
Pricing & Dimensions

VAC	HP (HD)	FLA (HD)	Model Number	List Price	H	W	D	3% ACLR	5% ACLR	65kA SCCR	100kA SCCR
					Dimensions (in.)						
Heavy Duty - 150% current overload for 60 seconds (Primarily used for constant torque applications. Examples are conveyors, crushers, extruders and mixers)											
460	7.5	12.7	AS3P4055AA	$6,860	72	32	20	$688	$763	$300	$600
460	10	16.5	AS3P4075AA	$7,010	72	32	20	$688	$763	$300	$600
460	15	23.5	AS3P4110AA	$7,760	72	32	22	$753	$775	$300	$600
460	20	31.7	AS3P4150AA	$8,386	72	32	22	$763	$913	$300	$600
460	25	39.2	AS3P4185AA	$9,142	72	32	22	$763	$913	$300	$600
460	30	46.3	AS3P4220AA	$9,860	72	32	22	$793	$1,000	$300	$600
460	40	61.5	AS3P4300AA	$11,014	72	34	22	$835	$1,025	$750	$1,400
460	50	74.5	AS3P4370AA	$11,533	72	34	22	$905	$1,250	$750	$1,400
460	60	88	AS3P4450AA	$12,470	72	34	22	$1,090	$1,500	$750	$1,400
460	75	106	AS3P4550AA	$14,900	72	34	22	$1,193	$1,750	$750	$1,400
460	100	145	AS3P4750AA	$18,783	72	34	22	$1,378	$1,875	$1,500	$1,750
460	125	173	AS3P4900AA	$23,478	74	38	26	$1,543	$2,063	$1,500	$1,750
460	150	211	AS3P4110KAA	$27,424	74	38	26	$1,763	$2,304	$1,500	$1,750
460	200	250	AS3P4132KAA	$32,016	74	38	26	$2,204	$2,850	$1,500	$1,750

VAC	HP (ND)	FLA (ND)	Model Number	List Price	H	W	D	3% ACLR	5% ACLR	65kA SCCR	100kA SCCR
					Dimensions (in.)						
Normal Duty - 120% current overload for 60 seconds (Primarily used for variable torque applications. Examples are fans, centrifugal pumps and blowers)											
460	10	16.5	AS3P4055AA	$6,860	72	32	20	$688	$763	$300	$600
460	15	23.5	AS3P4075AA	$7,010	72	32	20	$688	$763	$300	$600
460	20	31.7	AS3P4110AA	$7,760	72	32	22	$753	$775	$300	$600
460	25	39.2	AS3P4150AA	$8,386	72	32	22	$763	$913	$300	$600
460	30	46.3	AS3P4185AA	$9,142	72	32	22	$763	$913	$300	$600
460	40	61.5	AS3P4220AA	$9,860	72	32	22	$793	$1,000	$300	$600
460	50	74.5	AS3P4300AA	$11,014	72	34	22	$835	$1,025	$750	$1,400
460	60	88	AS3P4370AA	$11,533	72	34	22	$905	$1,250	$750	$1,400
460	75	106	AS3P4450AA	$12,470	72	34	22	$1,090	$1,500	$750	$1,400
460	100	145	AS3P4550AA	$14,900	72	34	22	$1,193	$1,750	$750	$1,400
460	125	173	AS3P4750AA	$18,783	72	34	22	$1,378	$1,875	$1,500	$1,750
460	150	211	AS3P4900AA	$23,478	74	38	26	$1,543	$2,063	$1,500	$1,750
460	200	250	AS3P4110KAA	$27,424	74	38	26	$1,763	$2,304	$1,500	$1,750
460	250	302	AS3P4132KAA	$32,016	74	38	26	$2,204	$2,850	$1,500	$1,750

AS3P ASD

460 V Assembly Unit
Options

Basic Surge Arrestor	Raycap Strikesorb Surge Arrestor	2 or 3 Position Switch	Push Button	Pilot Light	Cabinet Space Heater
$500	$2,375	$375	$250	$250	$600

AS3 ASD

Options Information & Pricing

AS3 Conduit Adapters

230 V AS3 Model Number	460 V AS3 Model Number	Frame	Conduit Adapter Model Number	List Price	Height Increase (in.)	Stand Alone Drive Rating
VFAS3-2004P	VFAS3-4004PC	A1	Included	N/A		NEMA 1
VFAS3-2007P	VFAS3-4007PC					
VFAS3-2015P	VFAS3-4015PC					
VFAS3-2022P	VFAS3-4022PC					
	VFAS3-4037PC					
VFAS3-2037P	VFAS3-4055PC	A2				
	VFAS3-4075PC					
VFAS3-2055P	VFAS3-4110PC	A3				
VFAS3-2075P	VFAS3-4150PC					
	VFAS3-4185PC					
VFAS3-2110P	VFAS3-4220PC	A4				
VFAS3-2150P	VFAS3-4300PC					
VFAS3-2185P	VFAS3-4370PC					
VFAS3-2220P	VFAS3-4450PC	A5				
VFAS3-2300P	VFAS3-4550PC					
VFAS3-2370P	VFAS3-4750PC					
VFAS3-2450P	VFAS3-4900PC	A6	NEM1306Z	$1,250	13.7	IP00
VFAS3-2550P	VFAS3-4110KPC					
	VFAS3-4132KPC					
	VFAS3-4160KPC	A7	NEM1112Z	$1,300	15.5	
	VFAS3-4200KPC	A8	NEM1113Z			
	VFAS3-4220KPC					
	VFAS3-4280KPC					

Notes:
- AS3 units rated IP00 do not include a bottom cover.
- Stand-alone AS3 power units from frame A6 through A8 do not comply with NEMA 1 standards. The conduit adapters listed above will bring the power unit into NEMA 1 compliance.

AS3 ASD

Options Information & Pricing

AS3 Flange-Mount Kits

230 V AS3 Model Number	460 V AS3 Model Number	Frame	Flange-Mount Kit Model Number	List Price
VFAS3-2004P	VFAS3-4004PC	A1	FOT018Z	$300
VFAS3-2007P	VFAS3-4007PC			
VFAS3-2015P	VFAS3-4015PC			
VFAS3-2022P	VFAS3-4022PC			
	VFAS3-4037PC			
VFAS3-2037P	VFAS3-4055PC	A2	FOT019Z	$400
	VFAS3-4075PC			
VFAS3-2055P	VFAS3-4110PC	A3	FOT020Z	$450
VFAS3-2075P	VFAS3-4150PC			
	VFAS3-4185PC			
VFAS3-2110P	VFAS3-4220PC	A4	FOT021Z	$650
VFAS3-2150P	VFAS3-4300PC			
VFAS3-2185P	VFAS3-4370PC			
VFAS3-2220P	VFAS3-4450PC	A5	FOT022Z	$700
VFAS3-2300P	VFAS3-4550PC			
VFAS3-2370P	VFAS3-4750PC			
VFAS3-2450P	VFAS3-4900PC	A6	FOT023Z	$1,050
VFAS3-2550P	VFAS3-4110KPC			
	VFAS3-4132KPC			
	VFAS3-4160KPC	A7	FOT013Z	$1,050
	VFAS3-4200KPC	A8	FOT014Z	$1,100
	VFAS3-4220KPC			
	VFAS3-4280KPC			
	VFAS3-4200KPC	A8 + IGBT7	FOT015Z	$1,300
	VFAS3-4220KPC			
	VFAS3-4280KPC			

Notes:
• The flange-mount kit allows the AS3 to be installed inside an enclosure with the heat sink mounted out-the-back to reduce cooling requirements and minimize enclosure dimensions.

AS3 ASD

Options Information & Pricing

AS3 Options

Model Number	Description	Applicable Option Slot	List Price
SBP010Z	Door Mounting Kit for the AS3 Keypad Retains the IP65 Rating of the Keypad	N/A	$100
CAB0011-0A	One Meter Cable for Remote Mounting the AS3 Keypad		$40
CAB0012-0A	Two Meter Cable for Remote Mounting the AS3 Keypad		$50
CAB0015-0A	Five Meter Cable for Remote Mounting the AS3 Keypad		$60
CAN001Z	CANopen Communication Option Card Includes two RJ45 Ports	A	$150
CAN002Z	CANopen Communication Option Card Includes one 9 pin DB9 Port		$150
CAN003Z	CANopen Communication Option Card Includes a 5 pin Terminal Block Adapter		$150
DEV003Z	DeviceNet Communication Option Card		$550
IPE003Z	EtherCAT Communication Option Card		$600
PDP003Z	PROFIBUS Communication Option Card		$450
PNE001Z	PROFINET Communication Option Card		$450
ETB013Z	I/O Extension 1 Option Card Includes: -6 Digital Inputs -2 Digital Open Collector Outputs -2 Analog Inputs	A, B, or C	$400
ETB014Z	I/O Extension 2 Option Card Includes: -3 Relay Outputs		$250
VEC008Z	RS422 Line Driver Encoder Feedback Card	B	$200
VEC010Z	Resolver Feedback Card		$300
SFT001Z	Safety Option Card Provides the Following IEC Certified Control Functions -SS1, SS2, SOS, SBC, SMS, SLS, SDI, SSM Requires SBP011Z for Installation	C	TBD
SBP011Z	Adapter that Provides Option Slot C	N/A	TBD
AS3-ACI	120VAC Logic Input Control Terminal Card Includes: -6 120VAC Digital Inputs -3 Relay Outputs -3 Analog Inputs -2 Analog Outputs -STO Terminals	Replaces Default Control Terminal Strip	$350

AS3 ASD

Options Information & Pricing

AS3 IGBT7 Braking Units

230 V AS3 Model Number	460 V AS3 Model Number	Frame	IGBT7 Braking Unit Model Number	List Price
VFAS3-2004P	VFAS3-4004PC	A1	Included	N/A
VFAS3-2007P	VFAS3-4007PC			
VFAS3-2015P	VFAS3-4015PC			
VFAS3-2022P	VFAS3-4022PC			
	VFAS3-4037PC			
VFAS3-2037P	VFAS3-4055PC	A2		
	VFAS3-4075PC			
VFAS3-2055P	VFAS3-4110PC	A3		
VFAS3-2075P	VFAS3-4150PC			
	VFAS3-4185PC			
VFAS3-2110P	VFAS3-4220PC	A4		
VFAS3-2150P	VFAS3-4300PC			
VFAS3-2185P	VFAS3-4370PC			
VFAS3-2220P	VFAS3-4450PC	A5		
VFAS3-2300P	VFAS3-4550PC			
VFAS3-2370P	VFAS3-4750PC			
VFAS3-2450P	VFAS3-4900PC	A6	PB7-4132K	$4,000
VFAS3-2550P	VFAS3-4110KPC			
	VFAS3-4132KPC			
	VFAS3-4160KPC	A7	Included	N/A
	VFAS3-4200KPC	A8	PB7-4200K	$5,500
	VFAS3-4220KPC			
	VFAS3-4280KPC			

AS1 ASD
Specifications

The AS1 adjustable speed drive builds on Toshiba's history of supplying powerful, reliable, and versatile drives. Designed with the end-user in mind, the AS1 combines a rugged, proven power platform with the latest technologies to provide users with a smarter, stronger, more reliable drive with flexible application control.

Product Scope

200 to 240 V at 1 to 100 HP
380 to 480 V at 1 to 700 HP
500 to 690 V at 2 to 700 HP

Highlights

- 100% Continuous Overload Rating, 150% for 60 Seconds
- Eight Programmable Discrete Inputs with Selectable Sync or Source Logic
- Three Programmable Discrete Outputs: One Form-C Contact & Two Open Collector Outputs
- Three Programmable Analog Inputs: One 4 to 20 mA, One 0 to 10 VDC Input, & One ±10 VDC Input
- Two Programmable Analog Outputs: One 4 to 20 mA or 0 to 10 VDC & One 0 to 1 mA Output or 0 to 7.5 VDC
- Two-Wire/Four-Wire RS485
- Auto-Restart Operation/Catch a Spinning Motor
- Improved PID Algorithms
- Built-In EMC Filter (Complies with the European EMC Directive)[1]

Standard Features

- NEMA 1 Enclosure with Additional Conduit Adapter
- Built-In Dynamic Breaking Drive Circuit up to 250 HP[2]
- Past Trip Monitoring: Stores the Last Four Faults in Succession, Along with Cumulative At-Trip Times
- EOI: Integral Seven-Segment LED Keypad
- Save, Restore, & Clone Multiple Drive Settings
- Ambient Temperature: 14° to 122°F (-10° to 50°C)
- Altitude: Up to 1000 Meters without Derate
- Humidity: 95% Non-Condensing
- Standards/Compliance: IEEE, UL Listed in US & Canada, CSA, NEMA, NEC, CE, NOM-117, C-TICK, & GOST

[1] Optional on 200 V Above 15 HP
[2] Up to 150 HP on 600 V Units

AS1 ASD

230 V Power Unit
Pricing & Dimensions

VAC	HP	FLA	Model Number	List Price	Frame	H	W	D	Shipping Weight (lbs.)
						Dimensions (in.)			
230	1	4.8	VFAS1-2007PL-HN	$938	2	10.0	5.5	6.0	10.0
230	2	8.0	VFAS1-2015PL-HN	$1,050	2	10.0	5.5	6.0	10.0
230	3	11.0	VFAS1-2022PL-HN	$1,238	3	11.1	6.1	6.5	14.3
230	5	17.5	VFAS1-2037PL-HN	$1,275	3	11.1	6.1	6.5	14.3
230	7.5	27.5	VFAS1-2055PL-HN	$1,745	4	12.6	6.9	6.5	18.0
230	10	33.0	VFAS1-2075PL-HN	$2,138	5A	12.6	8.3	7.5	26.5
230	15	54.0	VFAS1-2110PM-HN	$2,988	5B	15.7	9.1	7.5	53.0
230	20	66.0	VFAS1-2150PM-HN	$3,375	5B	15.7	9.1	7.5	53.0
230	25	75.0	VFAS1-2185PM-HN	$4,500	6	16.5	9.4	8.3	66.0
230	30	88.0	VFAS1-2220PM-HN	$5,198	6	16.5	9.4	8.3	66.0
230	40	120	VFAS1-2300PM-HN	$8,213	7B	21.7	12.6	9.5	126
230	50	144	VFAS1-2370PM-HN	$12,750	7B	21.7	12.6	9.5	126
230	60	176	VFAS1-2450PM-HN	$15,750	7B	21.7	12.6	9.5	126
230	75	221	VFAS1-2550P-HN	$19,382	9	36.2	12.2	14.6	220
230	100	285	VFAS1-2750P-HN	$23,188	10	40.2	13.8	14.6	269

VAC	HP	FLA	Model Number	List Price	Frame	H	W	D	Shipping Weight (lbs.)
						Dimensions (in.)			
230	75	221	VFAS1-2550P-H1	$17,719	9	26.8	12.2	14.6	167
230	100	285	VFAS1-2750P-H1	$21,263	10	30.8	13.8	14.6	200

Notes:
- Units with H1 at the end of the model number will require an AC line reactor. DC link reactor not included.

AS1 ASD

460 V Power Unit
Pricing & Dimensions

VAC	HP	FLA	Model Number	List Price	Frame	H	W	D	Shipping Weight (lbs.)
						Dimensions (in.)			
460	1	2.3	VFAS1-4007PL-HN	$1,092	2	10.0	5.5	6.0	10.0
460	2	4.1	VFAS1-4015PL-HN	$1,182	2	10.0	5.5	6.0	10.0
460	3	5.8	VFAS1-4022PL-HN	$1,275	2	10.0	5.5	6.0	10.0
460	5	10.5	VFAS1-4037PL-HN	$1,538	3	11.1	6.1	6.5	14.3
460	7.5	14.3	VFAS1-4055PL-HN	$1,875	4	12.6	6.9	6.5	18.0
460	10	17.6	VFAS1-4075PL-HN	$2,325	4	12.6	6.9	6.5	18.0
460	15	27.7	VFAS1-4110PL-HN	$3,000	5A	12.6	8.3	7.5	26.5
460	20	33.0	VFAS1-4150PL-HN	$3,750	5B	15.7	9.1	7.5	53.0
460	25	41.0	VFAS1-4185PL-HN	$4,650	5B	15.7	9.1	7.5	53.0
460	30	48.0	VFAS1-4220PL-HN	$4,875	6	16.5	9.4	8.3	66.0
460	40	66.0	VFAS1-4300PL-HN	$5,882	7A	21.7	9.4	9.5	95.0
460	50	79.0	VFAS1-4370PL-HN	$7,750	7A	21.7	9.4	9.5	95.0
460	60	94.0	VFAS1-4450PL-HN	$9,357	8	24.8	12.6	11.4	143
460	75	116	VFAS1-4550PL-HN	$10,375	8	24.8	12.6	11.4	143
460	100	160	VFAS1-4750PL-HN	$12,750	8	24.8	12.6	11.4	143
460	125	179	VFAS1-4900PC-HN	$16,305	9	36.2	12.2	14.6	220
460	150	215	VFAS1-4110KPC-HN	$18,495	10	40.2	13.8	14.6	269
460	200	259	VFAS1-4132KPC-HN	$22,338	11	46.9	13.0	14.6	296
460	250	314	VFAS1-4160KPC-HN	$27,294	12	46.9	16.9	14.6	405
460	300	387	VFAS1-4200KPC-HN	$31,798	13	46.9	23.0	14.6	507
460	350	427	VFAS1-4220KPC-HN	$36,062	13	46.9	23.0	14.6	507
460	450	550	VFAS1-4280KPC-HN	$49,707	13	46.9	23.0	14.6	507

Notes:

- Frame 13 and higher units do not include dynamic braking circuit. This is available as an option kit.

AS1 ASD

460 V Power Unit

Pricing & Dimensions

VAC	HP	FLA	Model Number	List Price	Frame	H	W	D	Shipping Weight (lbs.)
						Dimensions (in.)			
460	125	179	VFAS1-4900PC-H1	$14,805	9	26.8	12.2	14.6	167
460	150	215	VFAS1-4110KPC-H1	$16,833	10	30.8	13.8	14.6	200
460	200	259	VFAS1-4132KPC-H1	$20,413	11	37.4	13.0	14.6	216
460	250	314	VFAS1-4160KPC-H1	$25,200	12	37.4	16.9	14.6	243
460	300	387	VFAS1-4200KPC-H1	$29,610	13	37.4	23.0	14.6	360
460	350	427	VFAS1-4220KPC-H1	$33,312	13	37.4	23.0	14.6	360
460	450	550	VFAS1-4280KPC-H1	$44,813	13	37.4	23.0	14.6	360
460	550	671	VFAS1-4355KPC-H1	$63,800	14	45.3	34.6	14.6	640
460	600	759	VFAS1-4400KPC-H1	$73,500	14	45.3	34.6	14.6	640
460	700	941	VFAS1-4500KPC-H1	$93,375	15	45.3	43.6	14.6	750

Notes:

- Frame 13 and higher units do not include dynamic braking circuit. This is available as an option kit.
- Units with H1 at the end of the model number will require an AC line reactor. DC link reactor not included.

AS1 ASD

600/690 V Power Unit
Pricing & Dimensions

VAC	HP	FLA	Model Number	List Price	Frame	H	W	D	Shipping Weight (lbs.)
						Dimensions (in.)			
600/690	2	4.0	VFAS1-6022PL-HN	$4,140	6	16.5	9.4	8.3	66.0
600/690	3	4.5	VFAS1-6030PL-HN	$4,212	6	16.5	9.4	8.3	66.0
600/690	5	7.5	VFAS1-6055PL-HN	$4,284	6	16.5	9.4	8.3	66.0
600/690	7.5	10.0	VFAS1-6075PL-HN	$4,344	6	16.5	9.4	8.3	66.0
600/690	10	13.5	VFAS1-6110PL-HN	$4,416	6	16.5	9.4	8.3	66.0
600/690	15	17.0	VFAS1-6150PL-HN	$4,476	6	16.5	9.4	8.3	66.0
600/690	20	22.0	VFAS1-6185PL-HN	$4,548	6	16.5	9.4	8.3	66.0
600/690	25	27.0	VFAS1-6220PL-HN	$4,608	6	16.5	9.4	8.3	66.0
600/690	30	32.0	VFAS1-6300PL-HN	$4,680	6	16.5	9.4	8.3	66.0
600/690	40	41.0	VFAS1-6370PL-HN	$6,408	8	24.8	12.6	11.4	143
600/690	50	52.0	VFAS1-6450PL-HN	$6,948	8	24.8	12.6	11.4	143
600/690	60	62.0	VFAS1-6550PL-HN	$7,476	8	24.8	12.6	11.4	143
600/690	75	77.0	VFAS1-6750PL-HN	$8,016	8	24.8	12.6	11.4	143
600/690	100	99.0	VFAS1-6900PL-HN	$10,140	8	24.8	12.6	11.4	143

Notes:
- For models 6022 to 6110, HP and FLA ratings are valid only at 690 V.
- For all others, HP and FLA ratings are valid only at 600 V.
- For models 6150 to 6900, HP and FLA ratings at 690 V are available in the manual.

AS1 ASD

600/690 V Power Unit
Pricing & Dimensions

VAC	HP	FLA	Model Number	List Price	Frame	H	W	D	Shipping Weight (lbs.)
						Dimensions (in.)			
600/690	125	125	VFAS1-6110KPC-H1	$14,940	11	46.9	13.0	14.6	370
600/690	150	144	VFAS1-6132KPC-H1	$16,008	11	46.9	13.0	14.6	370
600/690	200	192	VFAS1-6200KPC-H1	$22,680	13	46.9	23.0	14.6	470
600/690	250	242	VFAS1-6250KPC-H1	$24,012	13	46.9	23.0	14.6	470
600/690	350	336	VFAS1-6315KPC-H1	$24,540	13	46.9	23.0	14.6	470
600/690	450	412	VFAS1-6400KPC-H1	$57,360	15	54.7	43.6	14.6	510
600/690	550	528	VFAS1-6500KPC-H1	$63,360	15	54.7	43.6	14.6	510
600/690	700	672	VFAS1-6630KPC-H1	$65,760	15	54.7	43.6	14.6	510

Notes:
- Units with H1 at the end of the model number will require an AC line reactor. DC link reactor not included.
- Frame 13 and higher units do not include dynamic braking circuit. This is available as an option kit.
- Current and HP ratings in this table are applicable only at 600 V; HP and FLA ratings at 690 V are available in the manual.

AS1 ASD
Option Information & Pricing

Conduit Adapters

Model Number	Frame	List Price	Height Increase (in.)	Stand-Alone AS1 IP Rating
NEM1101Z	2	$140	1.2	IP20
NEM1102Z	3	$140		
NEM1103Z	4	$150		
NEM1104Z	5A	$150	1.4	
NEM1105Z	5B	$155	1.5	
NEM1106Z	6	$155	2.4	
NEM1107Z	7A	$160	2.0	
NEM1117Z	7B	$350	1.9	
NEM1108Z	8	$185	5.4	
NEM1109Z	9	$850	9.8	IP00
NEM1110Z	10	$1,000	13.4	
NEM1111Z	11	$1,300		
NEM1112Z	12	$1,300	15.7	
NEM1113Z	13	$1,300		
NEM1115Z	14	$3,400	18.6	
NEM1116Z	15	$4,760		

Notes:
- AS1 units rated IP20 include a bottom cover, but will not accept conduit connections at the drive enclosure.
- AS1 units rated IP00 do not include a bottom cover.
- The optional conduit adapters listed above are NEMA 1 compliant. Stand-alone AS1 power units are not NEMA 1 compliant.
- No option for unit with PB7 on Frames 14 and 15.

AS1 ASD
Option Information & Pricing

Flange-Mount Kits

Model Number	Frame	List Price
FOT001Z	2	$275
FOT002Z	3	$300
FOT003Z	4	$350
FOT004Z	5A	$400
FOT005Z	5B	$450
FOT006Z	6	$450
FOT007Z	7A	$500
FOT008Z	7B	$500
FOT009Z	8	$525
FOT010Z	9	$550
FOT011Z	10	$600
FOT012Z	11	$750
FOT013Z	12	$1,050
FOT014Z	13	$1,100
FOT015Z	13 + PB7	$1,300

Notes:
- Flange-mount kits are only available for Frame 13 and below.
- The flange-mount kit allows the AS1 to be mounted in an enclosure with the heat sink out-the-back to reduce cooling needs and enclosure dimensions.

AS1 ASD
Option Information & Pricing

Communication Cards, Closed-Loop Cards, Keypads, Cables, & Cooling

Model Number	Description	List Price
RKP002Z	Remote-mountable LED Keypad has 20 mm LEDs, the Largest in its Class, to Ensure Outstanding Visibility Designed to Fit into Panels for Use as an Extension Panel or Display Can Be Used as a Parameter Copy, Capable of Storing Parameters for Up to Three Models One CAB001x-0A Cable is Necessary Remote-mounting Kit Not Necessary for Door-mounting Hardware Included	$225
RKP004Z	Remote-mountable LCD Keypad Contains 23-character, Eight-line Display Can be Used for Simple Setup Monitoring Using Jog Dial Snaps to Front of Drive or can be Remote-mounted Display Language Selectable Between English & Japanese (German, Italian, Spanish, & Chinese will be Available Soon) Remote-mounting Requires SBP006Z Remote-mounting Kit, CNT001Z Adapter (Hand-held Only), & CAB001x-0A Cable	$300
CNT001Z	RJ45 Female/RJ45 Adaptor Connects RKP004Z Keypad to AS1 Front Port via CAB001x-0A Cables	$40
CAB0011-0A	One-meter Cable for Remote-mounting RKP00xZ Keypads	$40
CAB0012-0A	Two-meter Cable for Remote-mounting RKP00xZ Keypads	$50
CAB0015-0A	Five-meter Cable for Remote-mounting RKP00xZ Keypads	$60
SBP006Z	Mounting Kit for RKP004Z LCD Keypad Maintains IP54 Rating for IP54 LCD Remote Keypad Can Be Used with SBP007Z for IP65 Installations	$60
SBP007Z	IP65 Door Attaches to SBP006Z Mounting Kit for RKP004Z Keypad	$30
FAN003Z	Control Fan Kit Allows for 60°C Operation with Derate for Frame 6	$120
FAN004Z	Control Fan Kit Allows for 60°C operation with Derate for Frame 7A	$125
FAN005Z	Control Fan Kit Allows for 60°C operation with Derate for Frame 7B	$130
FAN006Z	Control Fan Kit Allows for 60°C operation with Derate for Frame 8	$140

AS1 ASD
Option Information & Pricing

Dynamic Braking Transistor

Model Number	Description	List Price
PB7-4200K	Braking Unit for VFAS1-4200KPC-Hx, VFAS1-4220KPC-Hx, VFAS1-4280KPC-Hx	$5,500
PB7-4400K	Braking Unit for VFAS1-4355KPC-Hx, VFAS1-4400KPC-Hx, VFAS1-4500KPC-Hx Not Compatible with Conduit Box	$18,500
PB7-6300K	Braking Unit for VFAS1-6200KPC-Hx, VFAS1-6250KPC-Hx, VFAS1-6315KPC-Hx	$19,225
PB7-6400K	Braking Unit for VFAS1-6400KPC-Hx, VFAS1-6500KPC-Hx, VFAS1-6630KPC-Hx Not Compatible with Conduit Box	$20,700

G9® ASD
Specifications

The G9 adjustable speed drive is the most advanced low voltage, severe duty drive ever offered by Toshiba. Designed with the end-user in mind, this drive combines a rugged, proven power platform with the latest in power devices and an advanced micro-processor to provide users with a smarter, stronger, more reliable drive with flexible application control.

Product Scope

200 to 240 V at 0.75 to 100 HP
380 to 480 V at 1 to 350 HP

Highlights

- 115% Continuous Overload Rating, 150% for 120 Seconds[1]
- Eight Programmable Discrete Inputs
- Three Programmable Discrete Output Contacts: One Form-C & Two Form-A
- Three Programmable Inputs: One 0 to 20 mA or 0 to 10 VDC Input, One 0 to 10 VDC Input, & One ±10 VDC Input
- Two Programmable Analog Output: FM Terminal from 0 to 20 mA or 0 to 10 VDC & AM Terminal from 0 to 20 mA
- Regenerative Power Ride-Through
- DC-Link Reactors on Most HP Ratings
- Two-Wire/Four-Wire RS485
- Auto-Restart Operation/Catch a Spinning Motor

Standard Features

- UL Type-1 & NEMA 1 Enclosure
- Built-In Dynamic Braking Circuit
- 100 KAIC or 200 KAIC
- Built-In Real-Time Clock
- EOI: Backlit Plain-English LCD & Four-Digit/Seven-Digit LED Display
- Save, Restore, & Clone Multiple Drive Settings
- Ambient Temperature: 14° to 104°F (-10° to 40°C)
- Altitude: Up to 1000 Meters without Derate
- Humidity: 95% Non-Condensing
- Standards/Compliance: UL Listed in US & Canada, & American Recovery & Reinvestment Act Compliant (ARRA)

[1] 110% Continuous, 150% for 60 Seconds (≥60 HP, 230 V; 100 HP, 480 V)

G9® ASD

G9 230 V Power Unit Pricing & Dimensions

VAC	HP	FLA	Model Number	List Price	Frame	H	W	D	Shipping Weight (lbs.)
						Dimensions (in.)			
230	0.75	3.5	VT130G9U2010	$1,550	2	11.2	5.2	6.1	8
230	1	4.2	VT130G9U2015	$1,700	2	11.2	5.2	6.1	8
230	2	6.9	VT130G9U2025	$1,700	2	11.2	5.2	6.1	8
230	3	10.0	VT130G9U2035	$1,850	3	12.4	6.1	6.6	12
230	5	15.2	VT130G9U2055	$2,000	3	12.4	6.1	6.6	12
230	7.5	23.8	VT130G9U2080	$2,300	4	15.0	6.9	6.6	17
230	10	28.6	VT130G9U2110	$2,565	5A	15.1	8.3	7.6	21
230	15	46.8	VT130G9U2160	$3,285	5B	19.3	9.1	7.6	38
230	20	57.2	VT130G9U2220	$4,050	5B	19.3	9.1	7.6	38
230	25	76.0	VT130G9U2270	$5,400	6	25.9	11.1	13.2	97
230	30	90.0	VT130G9U2330	$6,237	7B	33.1	14.3	15.0	165
230	40	104	VT130G9U2400	$13,050	7B	33.1	14.3	15.0	165
230	50	152	VT130G9U2500	$15,300	7B	33.1	14.3	15.0	165
230	60	176	VT130G9U2600	$18,900	7B	33.1	14.3	15.0	165
230	75	221	VT130G9U2750	$21,263	9	51.7	14.6	17.6	321
230	100	285	VT130G9U210K	$25,515	10	53.1	14.8	17.6	362

G9® ASD

460 V G9 Power Unit
Pricing & Dimensions

VAC	HP	FLA	Model Number	List Price	Frame	H	W	D	Shipping Weight (lbs.)
						Dimensions (in.)			
460	1	2.7	VT130G9U4015	$1,550	2	11.2	5.2	6.1	9.0
460	2	3.6	VT130G9U4025	$1,600	2	11.2	5.2	6.1	9.0
460	3	5.0	VT130G9U4035	$1,700	2	11.2	5.2	6.1	9.0
460	5	9.1	VT130G9U4055	$2,050	3	12.4	6.1	6.6	12.0
460	7.5	12.4	VT130G9U4080	$2,250	4	15.0	6.9	6.6	17.0
460	10	15.3	VT130G9U4110	$2,790	4	15.0	6.9	6.6	17.0
460	15	24.0	VT130G9U4160	$3,600	5A	15.1	8.3	7.6	22.0
460	20	28.6	VT130G9U4220	$4,500	5B	19.3	9.1	7.6	38.0
460	25	35.7	VT130G9U4270	$5,580	5B	19.3	9.1	7.6	38.0
460	30	42.0	VT130G9U4330	$6,660	6	25.9	11.1	13.2	96.0
460	40	57.2	VT130G9U4400	$8,145	7A	30.8	11.1	14.3	124
460	50	68.5	VT130G9U4500	$9,923	7A	30.8	11.1	14.3	124
460	60	81.5	VT130G9U4600	$11,228	8	36.1	14.3	15.3	183
460	75	100.8	VT130G9U4750	$13,050	8	36.1	14.3	15.3	183
460	100	138.7	VT130G9U410K	$15,300	8	36.1	14.3	15.3	183
460	125	179	VT130G9U412K	$18,900	9	51.7	14.6	17.6	321
460	150	215	VT130G9U415K	$21,263	10	53.2	15.7	17.6	362
460	200	259	VT130G9U420K	$25,515	11	63.1	15.0	17.6	405
460	250	314	VT130G9U425K	$30,240	12	68.5	18.9	17.6	596
460	300	387	VT130G9U430K	$37,800	13	70.0	25.6	17.6	860
460	350	427	VT130G9U435K	$42,525	13	70.0	25.6	17.6	860

G9® ASD

Assembly Unit Numbering Convention

The G9 assembly unit combines the G9 power unit with commonly used options such as manual bypass and input disconnects in an easy-to-install turn-key package. G9 assembly units include a ground lug and door-mounted electronic operator interface.

Bypass units include an ASD/bypass selector switch, a bypass-start lighted push-button (red), and a bypass-stop lighted push-button (green). They are used for system control and are all located on the enclosure door.

Ordering Information: Use the following part numbering convention to configure the G9 assembly unit package when placing your order.

Example Part Number:	G9	4	###/###K	AA

Series:
G9 — G9 ASD

Voltage:
2 — 230
4 — 460

Model Number:
010 — 0.75 HP
015 — 1 HP
025 — 2 HP
035 — 3 HP
055 — 5 HP
080 — 7.5 HP
110 — 10 HP
160 — 15 HP
220 — 20 HP
270 — 25 HP
330 — 30 HP
400 — 40 HP
500 — 50 HP
600 — 60 HP
750 — 75 HP
10K — 100 HP
12K — 125 HP
15K — 150 HP
20K — 200 HP
25K — 250 HP
30K — 300 HP
35K — 350 HP

Style:
AA — Includes Motor Circuit Protector
AE — Includes Motor Circuit Protector, Three-contactor Bypass, and Overload Protection

G9® ASD

230 V G9 Assembly Unit
Pricing & Dimensions

VAC	HP	FLA	Model Number	List Price	H	W	D
					Dimensions (in.)		
AA - Includes Motor Circuit Protector							
230	3	10.0	G92035AA	$7,569	36	24	10
230	5	15.2	G92055AA	$7,802	36	24	10
230	7.5	23.8	G92080AA	$8,240	48	24	12
230	10	28.6	G92110AA	$9,275	48	36	20
230	15	46.8	G92160AA	$10,713	48	36	20
230	20	57.2	G92220AA	$11,988	48	36	20
230	25	76	G92270AA	$15,191	48	36	20
230	30	90	G92330AA	$16,091	60	36	20
230	40	104	G92400AA	$20,214	60	36	20
230	50	152	G92500AA	$23,667	90	36	24
230	60	176	G92600AA	$26,667	90	36	24
230	75	221	G92750AA	$29,167	90	36	24
230	100	285	G9210KAA	$39,082	90	48	30

VAC	HP	FLA	Model Number	List Price	H	W	D
					Dimensions (in.)		
AE - Includes Motor Circuit Protector, Three-Contactor Bypass, and Overload Protection							
230	3	10.0	G92035AE	$10,240	36	24	10
230	5	15.2	G92055AE	$10,488	36	24	10
230	7.5	23.8	G92080AE	$11,588	48	24	12
230	10	28.6	G92110AE	$12,385	48	36	20
230	15	46.8	G92160AE	$14,403	48	36	20
230	20	57.2	G92220AE	$15,806	48	36	20
230	25	76	G92270AE	$19,329	48	36	20
230	30	90	G92330AE	$20,319	60	36	20
230	40	104	G92400AE	$27,253	60	36	20
230	50	152	G92500AE	$31,568	90	36	24
230	60	176	G92600AE	$37,302	90	36	24
230	75	221	G92750AE	$40,427	90	36	24
230	100	285	G9210KAE	$49,755	90	48	30

For quotes, please contact TIC-ASD@toshiba.com

G9® ASD

460 V G9 Assembly Unit Pricing & Dimensions

VAC	HP	FLA	Model Number	List Price	H	W	D
					Dimensions (in.)		
AA - Includes Motor Circuit Protector							
460	5	9.1	G94055AA	$7,838	36	24	10
460	7.5	12.4	G94080AA	$8,458	36	24	10
460	10	15.3	G94110AA	$9,328	48	24	12
460	15	24.0	G94160AA	$10,633	48	36	20
460	20	28.6	G94220AA	$12,083	48	36	20
460	25	35.7	G94270AA	$12,115	48	36	20
460	30	42.0	G94330AA	$13,615	48	36	20
460	40	57.2	G94400AA	$15,678	48	36	20
460	50	68.5	G94500AA	$17,490	48	36	20
460	60	81.5	G94600AA	$20,214	60	36	20
460	75	101	G94750AA	$20,753	60	36	20
460	100	139	G9410KAA	$26,034	90	36	24
460	125	179	G9412KAA	$33,334	90	36	24
460	150	215	G9415KAA	$36,459	90	36	24
460	200	259	G9420KAA	$42,480	90	48	30
460	250	314	G9425KAA	$49,128	90	48	30
460	300	387	G9430KAA	$59,922	90	48	30
460	350	427	G9435KAA	$67,362	90	48	30

VAC	HP	FLA	Model Number	List Price	H	W	D
					Dimensions (in.)		
AE - Includes Motor Circuit Protector, Three-Contactor Bypass, and Overload Protection							
460	5	9.1	G94055AE	$10,559	36	24	10
460	7.5	12.4	G94080AE	$11,092	36	24	10
460	10	15.3	G94110AE	$12,022	48	24	12
460	15	24.0	G94160AE	$12,984	48	36	20
460	20	28.6	G94220AE	$15,227	48	36	20
460	25	35.7	G94270AE	$15,278	48	36	20
460	30	42.0	G94330AE	$16,847	48	36	20
460	40	57.2	G94400AE	$19,075	48	36	20
460	50	68.5	G94500AE	$21,032	48	36	20
460	60	81.5	G94600AE	$23,841	60	36	20
460	75	101	G94750AE	$26,163	60	36	20
460	100	139	G9410KAE	$31,568	90	36	24
460	125	179	G9412KAE	$37,302	90	36	24
460	150	215	G9415KAE	$40,427	90	36	24
460	200	259	G9420KAE	$48,683	90	48	30
460	250	314	G9425KAE	$60,370	90	48	30
460	300	387	G9430KAE	$76,572	90	48	30
460	350	427	G9435KAE	$81,810	90	48	30

G9® ASD

Assembly Unit Option Information & Pricing

G9 230V Assembly Unit Enclosure Options

Suffix	Description	Price
NF	1 to 25 HP Fan & Filtered Dust-inhibiting Enclosure	$2,000
	30 to 100 HP Fan & Filtered Dust-inhibiting Enclosure	$2,500
	125 HP Fan & Filtered Dust-inhibiting Enclosure	$3,500
N3	1 to 25 HP Fan & Filtered Enclosure for Outdoor Use	$3,000
	30 to 100 HP Fan & Filtered Enclosure for Outdoor Use	$5,000
NC	0.75 to 7.5 HP NEMA 12 Option	$3,000
	10 to 15 HP NEMA 12 Option	$5,000
	20 to 50 HP NEMA 12 Option	$9,000
	60 to 100 HP NEMA 12 Option	$14,000
N4	0.75 to 7.5 HP NEMA 4 Option	$5,000
	10 to 25 HP NEMA 4 Option	$12,000
	30 to 50 HP NEMA 4 Option	$18,000
	60 to 100 HP NEMA 4 Option	$26,000

G9 460V Assembly Unit Enclosure Options

Suffix	Description	Price
NF	1 to 50 HP Fan & Filtered Dust-inhibiting Enclosure	$2,000
	60 to 200 HP Fan & Filtered Dust-inhibiting Enclosure	$2,500
	250 to 350 HP Fan & Filtered Dust-inhibiting Enclosure	$3,500
N3	1 to 50 HP Fan & Filtered Enclosure for Outdoor Use	$3,000
	60 to 200 HP Fan & Filtered Enclosure for Outdoor Use	$5,000
	250 to 350 HP Fan & Filtered Enclosure for Outdoor Use	$7,000
NC	1 to 15 HP NEMA 12 Option	$3,000
	20 to 30 HP NEMA 12 Option	$5,000
	40 to 100 HP NEMA 12 Option	$9,000
	125 to 200 HP NEMA 12 Option	$14,000
	250 to 350 HP NEMA 12 Option	$16,000
N4	1 to 15 HP NEMA 4 Option	$5,000
	20 to 30 HP NEMA 4 Option	$12,000
	40 to 100 HP NEMA 4 Option	$18,000
	125 to 200 HP NEMA 4 Option	$26,000
	250 to 350 HP NEMA 4 Option	$32,000

P9 ASD
Specifications

The P9 adjustable speed drive is a revolution in pump control. By incorporating Toshiba's proprietary, ground-breaking Virtual Linear Pump (VLP®) Technology, the P9 directly, precisely, and linearly controls pressure, temperature, level, or flow. The P9 eliminates many obstacles users thought were an integral part of pump control and sets a new standard in ingenuity, performance, and ease-of-use for the pump industry.

Product Scope

200 to 240 V at 0.75 to 125 HP
380 to 480 V at 1 to 400 HP

Highlights

- Proprietary VLP® Technology
- Maximized Energy Savings on Variable Torque Loads
- Time Based Alternation
- Booster Pump Control Across-the-Line
- Sensorless Operation
- Automatic Sleep Timer
- Sealing Water Control Interlocks
- No Flow/Low NPSH Cut-Off
- Thrust Bearing Protection
- 100% Continuous Overload Rating, 120% for 60 Seconds
- Eight Programmable Discrete Inputs with Selectable Sync or Source Logic
- Three Programmable Discrete Output Contacts: Two Form-A & One Form-C
- Three Programmable Analog Inputs: One 0 to 20 mA or 0 to 10 VDC Isolated Input, One 0 to 10 VDC Input, & One ±10 VDC Input
- Two Programmable Analog Outputs: One 4 to 20 mA or 0 to 10 VDC & One 4 to 20 mA Output
- Two-Wire/Four-Wire Duplex RS485; MODBUS RTU or Toshiba TSB Built-In Communications
- Auto-Restart Operation/Catch a Spinning Motor

Standard Features

- NEMA 1 Enclosure
- Built-in Dynamic Braking Drive Circuit up to 350 HP
- Built-In EMC Filter (Complies with the European EMC Directive)
- Regenerative Power Ride-Through
- Past Trip Monitoring: Stores the Last Four Faults in Succession, Along with Cumulative At Trip Times
- EOI: Backlit Plain-English LCD & Four-Digit/Seven-Segment LED Display
- Save, Restore, & Clone Multiple Drive Settings
- Ambient Temperature: 14° to 104°F (-10° to 40°C)
- Altitude: Up to 1000 Meters without Derate
- Humidity: 20 to 93% Non-Condensing
- Standards/Compliances: UL Listed in US & Canada, & American Recovery & Reinvestment Act Compliant (ARRA)

P9 ASD

230 V P9 Power Unit Pricing & Dimensions

VAC	HP	FLA	Model Number	List Price	Frame	H	W	D	Shipping Weight (lbs.)
						Dimensions (in.)			
230	0.75	3.2	VT130P9U2010	$1,550	2	11.2	5.2	6.1	8
230	1	4.2	VT130P9U2015	$1,700	2	11.2	5.2	6.1	8
230	2	6.8	VT130P9U2025	$1,700	2	11.2	5.2	6.1	8
230	3	9.6	VT130P9U2035	$1,850	3	12.4	6.1	6.6	12
230	5	15.2	VT130P9U2055	$2,000	3	12.4	6.1	6.6	12
230	7.5	22	VT130P9U2080	$2,300	4	15.0	6.9	6.6	17
230	10	28	VT130P9U2110	$2,565	4	15.0	6.9	6.6	17
230	15	42	VT130P9U2160	$3,285	5B	19.3	9.1	7.6	38
230	20	54	VT130P9U2220	$3,650	5B	19.3	9.1	7.6	38
230	25	68	VT130P9U2270	$4,500	5B	19.3	9.1	7.6	38
230	30	80	VT130P9U2330	$5,197	6	25.9	11.1	13.2	98
230	40	104	VT130P9U2400	$7,087	7B	33.1	14.3	15.0	165
230	50	130	VT130P9U2500	$11,000	7B	33.1	14.3	15.0	165
230	60	154	VT130P9U2600	$13,500	7B	33.1	14.3	15.0	165
230	75	192	VT130P9U2750	$15,400	7B	33.1	14.3	15.0	165
230	100	248	VT130P9U210K	$18,600	9	51.7	14.6	17.6	321
230	125	312	VT130P9U212K	$23,000	10	53.2	15.7	17.6	362

P9 ASD

460 V P9 Power Unit
Pricing & Dimensions

VAC	HP	FLA	Model Number	List Price	Frame	H	W	D	Shipping Weight (lbs.)
						Dimensions (in.)			
460	1	2.1	VT130P9U4015	$1,550	2	11.2	5.2	6.1	9
460	2	3.4	VT130P9U4025	$1,600	2	11.2	5.2	6.1	9
460	3	4.8	VT130P9U4035	$1,700	2	11.2	5.2	6.1	9
460	5	7.6	VT130P9U4055	$2,050	3	12.4	6.1	6.6	13
460	7.5	11	VT130P9U4080	$2,250	3	12.4	6.1	6.6	13
460	10	14	VT130P9U4110	$2,635	4	15.0	6.9	6.6	14
460	15	21	VT130P9U4160	$3,100	5A	15.1	8.3	7.6	14
460	20	27	VT130P9U4220	$3,750	5A	15.1	8.3	7.6	14
460	25	34	VT130P9U4270	$4,200	5B	19.3	9.1	7.6	36
460	30	40	VT130P9U4330	$4,400	5B	19.3	9.1	7.6	36
460	40	52	VT130P9U4400	$5,200	6	25.9	11.1	13.2	98
460	50	65	VT130P9U4500	$6,700	7A	30.8	11.1	14.3	124
460	60	77	VT130P9U4600	$7,900	7A	30.8	11.1	14.3	124
460	75	96	VT130P9U4750	$8,800	8	36.1	14.3	15.3	185
460	100	124	VT130P9U410K	$11,000	8	36.1	14.3	15.3	185
460	125	156	VT130P9U412K	$13,500	8	36.1	14.3	15.3	185
460	150	180	VT130P9U415K	$15,400	9	51.7	14.6	17.6	321
460	200	240	VT130P9U420K	$18,600	10	53.2	15.7	17.6	362
460	250	302	VT130P9U425K	$23,000	11	63.1	15.0	17.6	405
460	300	361	VT130P9U430K	$27,000	12	68.5	18.9	17.6	594
460	350	414	VT130P9U435K	$30,400	12	68.5	18.9	17.6	594
460	400	477	VT130P9U440K	$35,000	13	70.0	25.6	17.6	874

P9 ASD

Assembly Unit

Part Numbering Convention

The P9 assembly unit combines the P9 power unit with commonly used options such as manual bypass and input disconnects in an easy-to-install turn-key package. P9 assembly units include a ground lug and door-mounted electronic operator interface.

Bypass units include an ASD/Bypass selector switch, a Bypass-Start lighted push-button (red), and a Bypass-Stop lighted push-button (green). They are used for system control and are all located on the enclosure door.

Ordering Information: Use the following part numbering convention to configure the P9 assembly unit package when placing your order.

Example Part Number:	P9	4	###/###K	AA

Series:
P9 — P9 ASD

Voltage:
2 — 230
4 — 460

Model Number:

010 — 0.75 HP	500 — 50 HP
015 — 1 HP	600 — 60 HP
025 — 2 HP	750 — 75 HP
035 — 3 HP	10K — 100 HP
055 — 5 HP	12K — 125 HP
080 — 7.5 HP	15K — 150 HP
110 — 10 HP	20K — 200 HP
160 — 15 HP	25K — 250 HP
220 — 20 HP	30K — 300 HP
270 — 25 HP	35K — 350 HP
330 — 30 HP	40K — 400 HP
400 — 40 HP	

Style:
AA — Includes Motor Circuit Protector
AE — Includes Motor Circuit Protector, Three-contactor Bypass, and Overload Protection

P9 ASD

230 V P9 Assembly Unit
Pricing & Dimensions

VAC	HP	FLA	Model Number	List Price	H	W	D
					Dimensions (in.)		
AA - Includes Motor Circuit Protector							
230	3	9.6	P92035AA	$7,366	36	24	10
230	5	15.2	P92055AA	$7,597	36	24	10
230	7.5	22	P92080AA	$8,059	48	24	12
230	10	28	P92110AA	$9,144	48	36	20
230	15	42	P92160AA	$9,998	48	36	20
230	20	54	P92220AA	$10,606	48	36	20
230	25	68	P92270AA	$11,863	48	36	20
230	30	80	P92330AA	$14,840	60	36	20
230	40	104	P92400AA	$16,983	60	36	20
230	50	130	P92500AA	$21,377	90	36	24
230	60	154	P92600AA	$21,084	90	36	24
230	75	192	P92750AA	$23,036	90	36	24
230	100	248	P9210KAA	$30,656	90	48	30
230	125	312	P9212KAA	$34,730	90	48	30

VAC	HP	FLA	Model Number	List Price	H	W	D
					Dimensions (in.)		
AE - Includes Motor Circuit Protector, Three-Contactor Bypass, and Overload Protection							
230	3	9.6	P92035AE	$10,076	36	24	10
230	5	15.2	P92055AE	$10,323	36	24	10
230	7.5	22	P92080AE	$11,268	48	24	12
230	10	28	P92110AE	$11,643	48	36	20
230	15	42	P92160AE	$13,331	48	36	20
230	20	54	P92220AE	$14,403	48	36	20
230	25	68	P92270AE	$16,853	48	36	20
230	30	80	P92330AE	$17,459	60	36	20
230	40	104	P92400AE	$23,000	60	36	20
230	50	130	P92500AE	$26,474	90	36	24
230	60	154	P92600AE	$30,719	90	36	24
230	75	192	P92750AE	$33,160	90	36	24
230	100	248	P9210KAE	$41,324	90	48	30
230	125	312	P9212KAE	$51,833	90	48	30

For quotes, please contact TIC-ASD@toshiba.com

P9 ASD

460 V P9 Assembly Unit Pricing & Dimensions

VAC	HP	FLA	Model Number	List Price	H	W	D
					Dimensions (in.)		
AA - Includes Motor Circuit Protector							
460	5	7.6	P94055AA	$7,586	36	24	10
460	7.5	11	P94080AA	$7,920	36	24	10
460	10	14	P94110AA	$8,863	48	24	12
460	15	21	P94160AA	$9,553	48	36	20
460	20	27	P94220AA	$10,518	48	36	20
460	25	34	P94270AA	$11,423	48	36	20
460	30	40	P94330AA	$11,720	48	36	20
460	40	52	P94400AA	$12,908	48	36	20
460	50	65	P94500AA	$14,356	48	36	20
460	60	77	P94600AA	$16,538	60	36	20
460	75	96	P94750AA	$19,957	60	36	20
460	100	124	P9410KAA	$24,293	90	36	24
460	125	156	P9412KAA	$26,355	90	36	24
460	150	180	P9415KAA	$28,795	90	36	24
460	200	240	P9420KAA	$33,322	90	48	30
460	250	302	P9425KAA	$39,465	90	48	30
460	300	361	P9430KAA	$45,289	90	48	30
460	350	414	P9435KAA	$50,929	90	48	30
460	400	477	P9440KAA	$59,800	90	48	30

VAC	HP	FLA	Model Number	List Price	H	W	D
					Dimensions (in.)		
AE - Includes Motor Circuit Protector, Three-Contactor Bypass, and Overload Protection							
460	5	7.6	P94055AE	$10,387	36	24	10
460	7.5	11	P94080AE	$10,617	36	24	10
460	10	14	P94110AE	$11,629	48	24	12
460	15	21	P94160AE	$12,372	48	36	20
460	20	27	P94220AE	$14,253	48	36	20
460	25	34	P94270AE	$14,801	48	36	20
460	30	40	P94330AE	$15,120	48	36	20
460	40	52	P94400AE	$16,396	48	36	20
460	50	65	P94500AE	$17,950	48	36	20
460	60	77	P94600AE	$20,872	60	36	20
460	75	96	P94750AE	$22,140	60	36	20
460	100	124	P9410KAE	$26,474	90	36	24
460	125	156	P9412KAE	$30,719	90	36	24
460	150	180	P9415KAE	$35,813	90	36	24
460	200	240	P9420KAE	$44,630	90	48	30
460	250	302	P9425KAE	$49,760	90	48	30
460	300	361	P9430KAE	$61,745	90	48	30
460	350	414	P9435KAE	$67,750	90	48	30
460	400	477	P9440KAE	$69,852	90	48	30

For quotes, please contact TIC-ASD@toshiba.com

P9 ASD

Assembly Unit Option Information & Pricing

P9 230V Assembly Unit Enclosure Options

Suffix	Description	Price
NF	1 to 25 HP Fan & Filtered Dust-inhibiting Enclosure	$2,000
	25 to 100 HP Fan & Filtered Dust-inhibiting Enclosure	$2,500
	125 HP Fan & Filtered Dust-inhibiting Enclosure	$3,500
N3	1 to 25 HP Fan & Filtered Enclosure for Outdoor Use	$3,000
	30 to 100 HP Fan & Filtered Enclosure for Outdoor Use	$5,000
	125 HP Fan & Filtered Enclosure for Outdoor Use	$7,000
NC	0.75 to 7.5 HP NEMA 12 Option	$3,000
	10 to 15 HP NEMA 12 Option	$5,000
	20 to 50 HP NEMA 12 Option	$9,000
	60 to 100 HP NEMA 12 Option	$14,000
	125 HP NEMA 12 Option	$16,000
N4	0.75 to 7.5 HP NEMA 4 Option	$5,000
	10 to 25 HP NEMA 4 Option	$12,000
	30 to 50 HP NEMA 4 Option	$18,000
	60 to 100 HP NEMA 4 Option	$26,000
	125 HP NEMA 4 Option	$32,000

P9 460V Assembly Unit Enclosure Options

Suffix	Description	Price
NF	1 to 50 HP Fan & Filtered Dust-inhibiting Enclosure	$2,000
	60 to 200 HP Fan & Filtered Dust-inhibiting Enclosure	$2,500
	250 to 400 HP Fan & Filtered Dust-inhibiting Enclosure	$3,500
N3	1 to 50 HP Fan & Filtered Enclosure for Outdoor Use	$3,000
	60 to 200 HP Fan & Filtered Enclosure for Outdoor Use	$5,000
	250 to 400 HP Fan & Filtered Enclosure for Outdoor Use	$7,000
NC	1 to 15 HP NEMA 12 Option	$3,000
	20 to 30 HP NEMA 12 Option	$5,000
	40 to 100 HP NEMA 12 Option	$9,000
	125 to 200 HP NEMA 12 Option	$14,000
	250 to 400 HP NEMA 12 Option	$16,000
N4	1 to 15 HP NEMA 4 Option	$4,000
	20 to 30 HP NEMA 4 Option	$11,500
	40 to 100 HP NEMA 4 Option	$18,000
	125 to 200 HP NEMA 4 Option	$26,000

GX9 ASD
Specifications

The GX9 severe duty adjustable speed drive is revitalizing the industry by combining Toshiba's proprietary, ground-breaking Virtual Linear Pump® (VLP) Technology into a drive that has a 600 V class rating. By incorporating VLP Technology, the GX9 directly, precisely, and linearly controls pressure, flow, level, and temperature, which seamlessly controls multiple devices while balancing the load between them. This state-of-the-art, energy efficient adjustable speed drive is designed to withstand the most severe conditions and is engineered to provide tight speed control, while offering the industry's most user-friendly operator interface.

Product Scope

600 V at 500 to 1200 HP

Highlights

- Proprietary VLP Technology
- Maximize Energy Savings on Variable Torque Loads
- No Flow/Low NPSH Cut-Off
- Automatic Sleep Timer
- Sealing Water Control Interlock
- 110% Continuous Overload Rating, 130% for 120 Seconds
- Eight Programmable Discrete Inputs
- Three Discrete Outputs; Two Form-A Contacts, One Form-C Contact
- Three Programmable Analog Inputs: One 0 to 20 mA or 0 to 10 VDC Isolated Input, One 0 to 10 VDC Input, & One ±10 VDC Input
- Two Programmable Analog Outputs: One Programmable 4 to 20 mA or 0 to 10 VDC & One 4 to 20 mA Output
- TTL Communication Port or RS485 with Optional TTL-MOD-485 Adapter
- Auto-Restart Operation/Catch a Spinning Motor

Standard Features

- NEMA 1, IP20 Gasketed & Filtered Enclosure
- Built-in Real-time Clock
- Past Trip Monitoring: Stores the Last 20 Faults in Succession, Along with Cumulative At-trip Times
- EOI: Backlit Plain-English LCD Display & Four Digit Seven Segment Display
- Ambient Temperature: -14° to 104°F (-10° to 40°C)
- Humidity: 95% Non-Condensing
- Altitude: Up to 1000 Meters without Derate
- Standards/Compliances: NEC, ANSI

GX9 ASD

Assembly Unit
Part Numbering Convention

The GX9 is an assembly unit from 500 to 1200 HP that includes an input circuit breaker.

The part numbering scheme for a given configuration is defined in the following section.

Ordering Information: Use the following part numbering convention to configure the GX9 series package when placing your order.

Example Part Number:	GX9	4	##K/##L	AA
Series: GX9 — GX9 ASD				
Voltage: 6 — 600				
Model Number: 50K — 500 HP 60K — 600 HP 70K — 700 HP 80K — 800 HP 90K — 900 HP 10L — 1000 HP 12L — 1200 HP				
Style: AA – Includes Input Circuit Breaker				

GX9 ASD

600 V GX9 Assembly Unit
Pricing & Dimensions

VAC	HP	FLA	Model Number	List Price	H	W	D
					Dimensions (in.)		
600	500	481	GX9650KAA	$100,000	95	32	33
600	600	601	GX9660KAA	$103,000	95	32	33
600	700	698	GX9670KAA	$109,000	95	32	33
600	800	770	GX9680KAA	$116,000	95	32	33
600	900	866	GX9690KAA	$136,000	95	48	33
600	1000	962	GX9610LAA	$151,000	95	48	33
600	1200	1155	GX9612LAA	$179,000	95	48	33

Notes:

- Factory authorized startup is required on all ASDs 400 HP and larger.

MICRO DRIVES

S15 ASD

Specifications

The S15 adjustable speed drive is a compact and high performance drive designed for controlling a wide range of variable and constant torque applications for multiple industries. This micro-drive is capable of working with permanent magnet (PM) motors, which allows a much greater flexibility in selecting a motor for an application. In addition, expanded PID control allows a greater level of precise control and operation of difficult level control applications. No other micro-drive delivers such reliable performance and extensive capabilities at such a competitive cost.

Product Scope

200 to 240 V at 0.5 to 20 HP
380 to 460 V at 0.5 to 20 HP
525 to 600 V at 2 to 20 HP

Single Phase

200 to 240 V at 0.25 to 3 HP

Highlights

- 110% Continuous Overload Rating, 150% for 60 Seconds
- Three Programmable Discrete Outputs: One Form-A, One Form-C, & One Open Collector
- Six Programmable Discrete Inputs
- One Programmable Analog Outputs: 4 to 20 mA or 0 to 10 VDC
- Three Programmable Analog Inputs: One 4 to 20 mA Input, One 0 to 10 VDC Input, & One ±10 VDC Input
- NetPac Wireless Connection
- Ten Year Life-Long Design
- Compact Design
- Capable of Working with Permanent Magnet (PM) Motors
- Safe Torque Off (STO) Compliant
- Auto-Restart Operation/Catch a Spinning Motor

Standard Features

- IP20 Enclosure; Wall-Mount
- Past Trip Monitoring: Stores the Last Eight Faults in Succession, Along with At-Trip Operation Data
- Rotary Encoder
- EOI: Four-Digit/Seven-Segment LED Display
- Ambient Temperature: 14° to 122°F (-10° to 50°C)
- Humidity: 95% Non-Condensing
- Altitude: Up to 1000 Meters without Derate
- Two-Wire RS485 Communication Port
- Compliances: UL Listed in US & Canada, CSA, & CE

S15 ASD

S15 Power Unit
Pricing & Dimensions

VAC	HP	FLA	Model Number	List Price	Frame	H	W	D	Shipping Weight (lbs.)
						Dimensions (in.)			
230 Single-Phase	0.25	1.5	VFS15S-2002PL-W1	$410	1C2	5.1	2.8	4.0	2.9
230 Single-Phase	0.5	3.3	VFS15S-2004PL-W1	$429	1C2	5.1	2.8	4.7	3.1
230 Single-Phase	1	4.8	VFS15S-2007PL-W1	$454	1C2	5.1	2.8	5.3	3.5
230 Single-Phase	2	8	VFS15S-2015PL-W1	$543	2C2	5.1	4.1	5.9	4.4
230 Single-Phase	3	11	VFS15S-2022PL-W1	$635	2C2	5.1	4.1	5.9	4.4

VAC	HP	FLA	Model Number	List Price	Frame	H	W	D	Shipping Weight (lbs.)
						Dimensions (in.)			
230	0.5	3.3	VFS15-2004PM-W1	$402	1C3	5.1	2.8	4.7	2.9
230	1	4.8	VFS15-2007PM-W1	$441	1C3	5.1	2.8	5.1	3.1
230	2	8	VFS15-2015PM-W1	$571	2F3	5.1	4.1	5.1	4.0
230	3	11	VFS15-2022PM-W1	$648	2F3	5.1	4.1	5.1	4.2
230	5	17.5	VFS15-2037PM-W1	$883	3F3	6.7	5.5	5.9	6.0
230	7.5	27.5	VFS15-2055PM-W1	$1,256	4C3	8.7	5.9	6.7	10.8
230	10	33	VFS15-2075PM-W1	$1,376	4C3	8.7	5.9	6.7	11.0
230	15	54	VFS15-2110PM-W1	$1,838	5C3	12.2	7.1	7.5	19.4
230	20	66	VFS15-2150PM-W1	$2,334	5C3	12.2	7.1	7.5	19.8

VAC	HP	FLA	Model Number	List Price	Frame	H	W	D	Shipping Weight (lbs.)
						Dimensions (in.)			
460	0.5	1.5	VFS15-4004PL1-W1	$540	2C4	5.1	4.2	5.9	4.0
460	1	2.3	VFS15-4007PL1-W1	$570	2C4	5.1	4.2	5.9	4.2
460	2	4.1	VFS15-4015PL1-W1	$676	2C4	5.1	4.2	5.9	4.4
460	3	5.5	VFS15-4022PL1-W1	$776	3C4	6.7	5.5	5.9	6.6
460	5	9.5	VFS15-4037PL1-W1	$935	3C4	6.7	5.5	5.9	7.3
460	7.5	14.3	VFS15-4055PL-W1	$1,373	4C4	8.7	5.9	6.7	11.7
460	10	17	VFS15-4075PL-W1	$1,424	4C4	8.7	5.9	6.7	11.9
460	15	27.7	VFS15-4110PL-W1	$1,966	5C4	12.2	7.1	7.5	19.2
460	20	33	VFS15-4150PL-W1	$2,328	5C4	12.2	7.1	7.5	19.4

VAC	HP	FLA	Model Number	List Price	Frame	H	W	D	Shipping Weight (lbs.)
						Dimensions (in.)			
600	2	2.7	VFS15-6015P-W1	$747	S2C6	5.2	4.2	6.0	2.4
600	3	3.9	VFS15-6022P-W1	$834	S3C6	6.7	5.6	6.0	4.0
600	5	6.1	VFS15-6037P-W1	$974	S3C6	6.7	5.6	6.0	4.2
600	7.5	9	VFS15-6055P-W1	$1,792	S4C6	8.7	6.0	6.7	7.9
600	10	11	VFS15-6075P-W1	$1,994	S4C6	8.7	6.0	6.7	8.2
600	15	17	VFS15-6110P-W1	$2,554	S5C6	12.3	7.1	7.5	13.4
600	20	22	VFS15-6150P-W1	$2,762	S5C6	12.3	7.1	7.5	13.7

S15 ASD

S15 Option Information & Pricing

S15 Conduit Adapters

230 V Drive Model Numbers	460 V Drive Model Numbers	600 V Drive Model Numbers	Model Numbers	List Price	Height Increase (in.)
VFS15-2004 VFS15-2007 VFS15S-2002 VFS15S-2004 VFS15S-2007	N/A	N/A	NEM201Z	$80	2.57
VFS15-2015 VFS15-2022	N/A	N/A	NEM202Z	$80	2.58
VFS15S-2015 VFS15S-2022	N/A	N/A	NEM203Z	$80	2.58
N/A	VFS15-4004PL VFS15-4007PL VFS15-4015PL	N/A	NEM204Z	$80	2.58
N/A	VFS15-4004PL1 VFS15-4007PL1 VFS15-4015PL1	VFS15-6015	NEM209Z	$180	2.56
N/A	VFS15-4022PL1 VFS15-4037PL1	VFS15-6022 VFS15-6037	NEM210Z	$180	3.01
VFS15-2037	N/A	N/A	NEM205Z	$85	2.62
N/A	VFS15-4022PL VFS15-4037PL	N/A	NEM206Z	$85	2.56
VFS15-2055 VFS15-2075	VFS15-4055 VFS15-4075	VFS15-6055 VFS15-6075	NEM207Z	$85	3.70
VFS15-2110 VFS15-2150	VFS15-4110 VFS15-4150	VFS15-6110 VFS15-6150	NEM208Z	$100	3.88

Notes:
- Conduit adapters are mounted below the power terminal strips and replace the plastic plate provided with the drive.
- Conduit adapters provide mechanical strength and a location for a conduit connector. This allows wall-mounting of the S15 where NEMA 1 standards must be met.
- The height of the S15 will increase with the addition of the conduit adapter.

S15 ASD

S15 Option
Information & Pricing

DIN005Z Front

DIN005Z Back

DIN Rail Mounting Kits

230 V Drive Model Numbers	460 V Drive Model Numbers	Model Numbers	List Price
VFS15S-2002 VFS15S-2004 VFS15S-2007 VFS15-2004 VFS15-2007	N/A	DIN003Z	$75
VFS15S-2015 VFS15S-2022 VFS15-2015 VFS15-2022	VFS15-4004 VFS15-4007 VFS15-4015	DIN005Z	$100

S15 EMC Grounding Plates

230 V Drive Model Numbers	460 V Drive Model Numbers	Model Numbers	List Price
VFS15S-2002 VFS15S-2004 VFS15S-2007 VFS15-2004 VFS15-2007	N/A	EMP007Z	$35
VFS15S-2015 VFS15S-2022 VFS15-2015 VFS15-2022	VFS15-4004 VFS15-4007 VFS15-4015 VFS15-4022 VFS15-4037	EMP008Z	$35
VFS15-2037	N/A	EMP009Z	$35
VFS15-2055 VFS15-2075	VFS15-4055 VFS15-4075	EMP010Z	$35
VFS15-2110 VFS15-2150	VFS15-4110 VFS15-4150	EMP011Z	$35

Notes:
- Not a stock item; may require up to 16-week lead time.
- Not compatible with conduit adapters.

S15 ASD

S15 Option
Information & Pricing

Communication Cards, Keypads, & Cables

Model Number	Description	List Price
RKP002Z	Remote Mount Keypad and Parameter Writer Remote-mountable LED Keypad has 20 mm LEDs, the Largest in its Class, to Ensure Outstanding Visibility Designed to Fit into Panels for Use as an Extension Panel or Display Can be Used as a Parameter Copy, Capable of Storing Parameters for up to Three Models One CAB001x-0A Cable is Necessary Remote-mounting Kit Not Necessary for Door-mounting Hardware Included	$225
CAB0011-0A	One-meter Communication Cable	$40
CAB0012-0A	Two-meter Communication Cable	$50
CAB0015-0A	Five-meter Communication Cable	$60
PWU003Z	Parameter Writer Stores S15 Parameter Sets Writes Program Sets to Drive With or Without Incoming Power to the Drive	$1,050
TOS-SN-10B	Remote-mount Touch-pad Includes 1.5-meter Connection Cable M3 Mounting Hardware Not Included	$225
PDP003Z	Profibus Communication Option Card for S15 Drive SBP009Z Required	$450
DEV003Z	DeviceNet Communication Option Card for S15 Drive SBP009Z Required	$550
IPE002Z	Ethernet IP - Modbus TCP Communication Option Card for S15 Drive SBP009Z Required	$600

S15 ASD

S15 Option
Information & Pricing

Model Number	Description	List Price
IPE003Z	Ethercat Communication Option Card for S15 Drive SBP009Z Required	$600
SBP009Z	S15 Communication Option Adapter	$70
USB001Z	USB-to-serial Conversion Unit Allows Users to Use a USB Port on Computers as a COMport for Connecting it to an ASD for Data Communications USB Input and RS485 or TTL Output for Use on S15 CAB001x-0A Required	$200

Notes:
- All of the options listed above are not installed and ship separately.

MICRO DRIVES

S11 ASD

Specifications

The S11 adjustable speed drive provides maximum torque with precise speed control and features an easy-to-use, quiet, and compact design. A removable terminal board, larger terminals, bidirectional speed search, and PID control allow this drive to deliver reliable performance and extensive capabilities.

Product Scope

200 to 240 V at 1 to 5 HP (IP54)
380 to 500 V at 2 to 5 HP (IP54)
525 to 600 V at 2 to 20 HP

Single-Phase

200 to 240 V at 1 to 3 HP (IP54)

Highlights

- 100% Continuous Overload Rating, 150% for 60 Seconds
- Eight Programmable Discrete Inputs with Selectable Sink or Source Logic
- Two Programmable Discrete Outputs: One Open Collector & One Relay Contact
- Two Programmable Analog Inputs: One 4 to 20 mA or 0 to 10 VDC Input & One 0 to 10 VDC Input
- Reduced Dimension Compact Design Allowing For Small Footprint & Side-by-Side Mounting Capabilities
- Regenerative Power Ride-Through
- Modbus RTU Communication Protocol
- Built-In EMI Noise Filter
- Auto-Restart Operation/Catch a Spinning Motor

Standard Features

- NEMA 1/IP20 Enclosure
- Save, Restore, & Clone Multiple Drive Settings
- EOI: Backlit Plain-English LCD & Four-Digit/Seven-Digit LED Display
- Ambient Temperature: 14 to 122°F (-10° to 50°C)
- Humidity: 93% Non-Condensing
- Altitude: Up to 1000 Meters without Derate
- Compliances: UL Listed in US & Canada, CSA, & CE

S11 ASD

S11 Power Unit
Pricing & Dimensions

VAC	HP	FLA	Model Number	List Price	Frame	H	W	D	Shipping Weight (lbs.)
						Dimensions (in.)			
600	2	2.7	VFS11-6015P-WN	$747	B	5.6	4.1	5.9	2.9
600	3	3.9	VFS11-6022P-WN	$834	C	7.2	5.5	5.9	4.6
600	5	6.1	VFS11-6037P-WN	$974	C	7.2	5.5	5.9	4.8
600	7.5	9	VFS11-6055P-WN	$1,792	D	9.1	7.1	6.7	10.3
600	10	11	VFS11-6075P-WN	$1,994	D	9.1	7.1	6.7	10.3
600	15	17	VFS11-6110P-WN	$2,554	E	13.0	9.6	7.5	19.4
600	20	22	VFS11-6150P-WN	$2,762	E	13.0	9.6	7.5	19.4

S11 ASD

S11 IP54 Power Unit
Pricing & Dimensions

S11 ASD IP54 with Disconnect

VAC	HP	FLA	Model Number	List Price	Frame	H	W	D	Shipping Weight (lbs.)
						Dimensions (in.)			
230 Single-Phase	1	4.8	VFS11S-2007PLE-WN	$1,224	1	9.4	8.3	7.0	8.8
230 Single-Phase	2	7.8	VFS11S-2015PLE-WN	$1,355	2	11.7	8.5	8.1	13.3
230 Single-Phase	3	11	VFS11S-2022PLE-WN	$1,525	3	13.4	9.1	8.7	13.5
230	1	4.8	VFS11-2007PME-WN	$1,211	1	9.4	8.3	7.0	8.8
230	3	11	VFS11-2022PME-WN	$1,393	2	11.7	8.5	8.1	13.0
230	5	17.5	VFS11-2037PME-WN	$1,772	3	13.4	9.1	8.7	16.8
460	2	4.1	VFS11-4015PLE-WN	$1,428	2	11.7	8.5	8.1	13.5
460	3	5.5	VFS11-4022PLE-WN	$1,580	3	13.4	9.1	8.7	17.2
460	5	9.5	VFS11-4037PLE-WN	$1,933	3	13.4	9.1	8.7	17.7

S11 ASD

S11 Option
Information & Pricing

Conduit Adapters

600 V Drive Model Numbers	ModelNumber	ListPrice	Height Increase (in.)
VFS11-6015P-WN	NEM121Z	$70	2.7
VFS11-6022P-WN VFS11-6037P-WN	NEM130Z		
VFS11-6055P-WN VFS11-6075P-WN	NEM140Z		3.8
VFS11-6110P-WN VFS11-6150P-WN	N/A		3.9

Notes:
- Conduit adapters provide mechanical strength and a location for a conduit connector. This allows wall-mounting of the S11 where NEMA 1 standards must be met.
- The height of the S11 will increase with the addition of the conduit adapter.
- Conduit adapters are mounted below the power terminal strips and replace the plastic plate provided with the drive.

S11 ASD

S11 Option
Information & Pricing

Communication Cards, Closed-Loop Cards, Keypads, Cables, & Cooling

Model Number	Description		List Price
RS4003Z	RS485 Communications Card Replaces Standard Terminal Strip Provides Reduced I/O Connections Compared with Standard Terminal Strip		$125
DEV001Z	DeviceNet Communications Card Replaces Standard Terminal Strip Provides Reduced I/O Connections Compared with Standard Terminal Strip		$450
TOS-SN-10A	Remote-mount Touch-pad Includes Two-meter Connection Cable M3 Mounting Hardware Not Included		$225
RKP005Z	Remote-mountable LED Keypad with 20 mm LEDs to Ensure Outstanding Visibility Designed to Be Fit into Panels for Use as an Extension Panel or Display Can be Used to Copy Drive Parameters from One Drive to Another Capable of Storing Parameters for Up to Three Drives Requires One CAB00xx-0A Cable Remote-mount Kit Not Necessary for Door-mounting Hardware Included		$225
S-OISA	Remote-mount LCD Touch-pad Parameter Writer (Includes Two-meter Connection Cable) Remote-mounting Kit not Necessary for Door-mounting Hardware Included		$250
ASD-CAB-PC	RS232 to TTL Cable for PC-to-ASD Communications Connects to Standard Terminal Strip		$65

Notes:
- All of the options listed above are not installed and ship separately.

NANO DRIVES

NC3 ASD

Specifications

The nC3 ASD is a RoHS compliant nano-sized drive with a full range of features to meet the demands of most 120/220 V industrial or HVAC applications. The nC3 may be operated from either a single or three-phase power source and is a reliable option for OEMs, allowing for easy installation and drop-in replacement for starters. The nC3 is side-by-side mountable and its vertical construction allows for an impressively small footprint.

Product Scope

200 to 240 V at 0.5 to 5 HP

Single Phase

200 to 240 V at 0.5 to 3 HP
120V at 0.5 to 1 HP (Three-Phase 230VAC Output)

Highlights

- Powerful, User-Friendly, Long-Life Nano-Sized Drive
- Features Include:
  - Automatic Torque Boost
  - Vector Control
  - PID
  - DC Braking
  - Automated Cooling Fan Control
  - Parts Replacement Alarm
- Modbus RTU Communication with RS485
- Options Include:
  - EMC Plate
- Remote Keypad IP54 Rated
- DIN Rail
- LCD Parameter Writer

NC3 ASD

NC3 Power Unit
Pricing & Dimensions

NC3 230 V

VAC	HP	FLA	Model Number	List Price	H	W	D	Shipping Weight (lbs.)
					Dimensions (in.)			
230	0.5	2.4	VFNC3-2004P	$299	5.2	2.9	4.8	1.8
230	1	4.2	VFNC3-2007P	$319	5.2	2.9	5.2	1.8
230	2	7.5	VFNC3-2015P	$399	5.2	2.9	5.2	2.7
230	3	10.0	VFNC3-2022P	$458	5.2	4.2	5.2	2.7
230	5	16.7	VFNC3-2037P	$599	6.7	4.2	5.6	4.4

NC3 230 V Single-Phase

VAC	HP	FLA	Model Number	List Price	H	W	D	Shipping Weight (lbs.)
					Dimensions (in.)			
230 Single-Phase	0.25	1.4	VFNC3S-2002PL	$290	5.2	2.9	4.0	1.8
230 Single-Phase	0.5	2.4	VFNC3S-2004PL	$299	5.2	2.9	4.8	1.8
230 Single-Phase	1	4.2	VFNC3S-2007PL	$319	5.2	2.9	5.2	1.8
230 Single-Phase	2	7.5	VFNC3S-2015PL	$399	5.2	4.2	6.2	3.3
230 Single-Phase	3	10.0	VFNC3S-2022PL	$458	5.2	4.2	6.2	3.3

NC3 120 V Single-Phase

VAC	HP	FLA	Model Number	List Price	H	W	D	Shipping Weight (lbs.)
					Dimensions (in.)			
120 Single-Phase	0.5	2.4	VFNC3S-1004P	$374	5.1	2.8	4.8	2.2
120 Single-Phase	1	4.2	VFNC3S-1007P	$510	5.1	4.1	6.1	3.3

GX7M ASD
Specifications

The innovative modular design of the GX7M allows for users to specify only the necessary components in a dynamic configuration to fit various needs and applications. Featuring stackable rack-in/rack-out modules and flexible power components, the GX7M can be easily maintained and used on a variety of applications. In addition, the drive offers higher horsepower ratings in a smaller footprint, which provides users more real estate to improve application efficiency.

Product Scope

480 V, 125 to 1500 HP
600 to 690 V, 150 to 1750 HP

Highlights

- 115% Continuous Overload Rating, 150% for 60 Seconds from 125 to 1000 HP at 480 V; 105% Continuous Overload Rating, 120% for 60 Seconds from 1200 to 1500 HP at 480 V
- 115% Continuous Overload Rating, 150% for 60 Seconds from 150 to 1200 HP at 600 V; 105% Continuous Overload Rating, 120% for 60 Seconds from 1400 to 1750 HP at 600 V
- Eight Programmable Discrete Inputs with Selectable Sync or Source Logic
- Three Programmable Discrete Form C Output Contacts
- Three Programmable Inputs: One 0 to 20 mA or 0 to 10 VDC Input, One 0 to 10 VDC Input, & One ±10 VDC Input
- Two Programmable Analog Outputs: FM Terminal from 0 to 20 mA or 0 to 10 VDC & AM Terminal from 0 to 20 mA
- RS232/RS485 & TTL Communication Ports
- Built-In Proportional/Integral/Derivative (PID) Control Loop
- Modular Style Power Units for Rack In/Rack Out Capability with Drop-In Replacements
- Vertically-Stacked Modules Allow for High Horsepower Ratings with Small Footprint
- Flexible Power Components Adaptable for Various Applications with Upgradable Modules

Standard Features

- NEMA 1 Free-Standing
- EOI: Backlit Plain-English LCD Display
- Ambient Temperature: -14° to 104°F (-10° to 40°C)
- Humidity: 95% Non-Condensing
- Altitude: Up to 3300 Feet (1000 Meters) without Derate
- Standards/Compliances: UL Listed in US & Canada, NEMA, NEC, & American Recovery & Reinvestment Act Compliant (AARA)

GX7M ASD

Part Numbering Convention

The part numbering scheme for a given configuration is defined in the following section.

Ordering Information: Use the following part numbering convention to configure the GX7M series package when placing your order.

Example Part Number:	GX7M	6	##K/##L	AA	LH/RH

Series:
GX7M — GX7M ASD

Voltage:
4 — 480
6 — 600/690

Model Number for 480 V:

13K – 125 HP	70K — 700 HP
15K – 150 HP	81K — 800 HP
20K – 200 HP	10L — 1000 HP
26K – 250 HP	12L — 1200 HP
39K – 350 HP	14L — 1400 HP
45K – 450 HP	15L — 1500 HP
51K – 500 HP	
60K – 600 HP	

Model Number for 600/690 V:

15K – 150 HP	80K — 800 HP
20K – 200 HP	10L — 1000 HP
25K – 250 HP	12L — 1200 HP
30K – 300 HP	14L — 1400 HP
40K – 400 HP	15L — 1500 HP
50K – 500 HP	16L — 1600 HP
60K – 600 HP	17L — 1750 HP
70K – 700 HP	

Style:
AA – Includes Input Circuit Breaker
LH – Rectifier Cabinet Located on Left Hand Side
RH – Rectifier Cabinet Located on Right Hand Side

GX7M ASD

460 V Assembly Unit Pricing & Dimensions

VAC	HP	FLA	Model Number	List Price	H	W	D
					Dimensions (in.)		
460	125	156	GX7M413KAA	$52,000	89	40	33.5
460	150	196	GX7M415KAA	$55,000	89	40	33.5
460	200	241	GX7M420KAA	$62,000	89	40	33.5
460	250	313	GX7M426KAA	$69,000	89	40	33.5
460	350	469	GX7M439KAA	$78,000	89	40	33.5
460	450	546	GX7M445KAA	$85,000	89	40	33.5
460	500	623	GX7M451KAA	$91,000	89	40	33.5
460	600	722	GX7M460KAA	$100,000	89	40	33.5
460	700	842	GX7M470KAA	$111,000	89	60	33.5
460	800	980	GX7M481KAA	$129,000	89	60	33.5
460	900	1121	GX7M493KAA	$140,000	89	60	33.5
460	1000	1203	GX7M410LAA	$158,000	89	60	33.5
460	1200	1443	GX7M412LAA	$170,000	89	60	33.5
460	1400	1684	GX7M414LAA	$185,000	89	60	33.5
460	1500	1804	GX7M415LAA	$205,000	89	60	33.5

Notes:
• Factory authorized startup is required on all ASDs 400 HP and larger.

600 V Assembly Unit Pricing & Dimensions

VAC	HP	FLA	Model Number	List Price	H	W	D
					Dimensions (in.)		
600/690	150	150	GX7M615KAA	$55,000	89	40	33.5
600/690	200	200	GX7M620KAA	$62,000	89	40	33.5
600/690	250	250	GX7M625KAA	$69,000	89	40	33.5
600/690	300	300	GX7M630KAA	$78,000	89	40	33.5
600/690	400	400	GX7M640KAA	$85,000	89	40	33.5
600/690	500	500	GX7M650KAA	$91,000	89	40	33.5
600/690	600	600	GX7M660KAA	$100,000	89	40	33.5
600/690	700	700	GX7M670KAA	$111,000	89	40	33.5
600/690	800	800	GX7M680KAA	$129,000	89	60	33.5
600/690	1000	1000	GX7M610LAA	$140,000	89	60	33.5
600/690	1200	1200	GX7M612LAA	$158,000	89	60	33.5
600/690	1400	1400	GX7M614LAA	$170,000	89	60	33.5
600/690	1500	1500	GX7M615LAA	$185,000	89	60	33.5
600/690	1600	1600	GX7M616LAA	$205,000	89	60	33.5
600/690	1750	1750	GX7M617LAA	$220,000	89	60	33.5

Notes:
• Factory authorized startup is required on all ASDs 400 HP and larger.

W7 ASD
Specifications

The W7 adjustable speed drive offers the latest technology and proven reliability, making this AC drive one of the most advanced drives on the market. Our patented 18-pulse, copper-wound, auto-transformer design masters the needs of customer's applications by providing a reliable and efficient adjustable speed drive that eliminates significant harmonic content to the power grid.

Product Scope

18-Pulse: 460 V at 20 to 500 HP
18-Pulse: 600 to 690 V at 75 to 400 HP

Highlights

- Patented 18-Pulse, Copper-Wound Input, Auto-Transformer Design
- Up to 60% Reduction in Transformer Losses
- Small Footprint with Uniform 24" Depth on All Models
- Meets IEEE 519-1992 Guidelines without Added Filters
- 100% Continuous Overload Rating, 120% for 60 Seconds
- Eight Programmable Discrete Inputs with Selectable Sync or Source Logic
- Three Programmable Discrete Output Contacts: Two Form-A Contacts & One Form-C Contact
- Three Programmable Analog Inputs: One 0 to 20 mA or 0 to 10 VDC, One 0 to 10 VDC, & One ±10 VDC
- Two Programmable Analog Outputs: One 4 to 20 mA or 0 to 10 VDC & One 4 to 20 mA Isolated Output
- Analog Isolator: Two Isolated Outputs & One Isolated Input
- Half/Full Duplex RS232/RS485 & TTL Communication Ports

Standard Features

- NEMA 1, IP20, Gasket & Filter Enclosure
- Input Fuses
- Ground Lug
- 65,000 AIC Breaker
- Customer Terminal Block
- Built-In Real-Time Clock
- EOI: Door-Mounted, Backlit Plain-English LCD Display
- Ambient Temperature: 14° to 104°F (-10° to 40°C)
- Humidity: 95% Non-Condensing
- Altitude: Up to 1000 Meters without Derate
- Standards/Compliance: UL Listed in US & Canada

W7 18 Pulse ASD

Part Numbering Convention

The W7 series ASD is available with commonly used options such as manual bypass and input circuit breakers in an easy-to-install package.

The W7 ASD includes an auto-transformer, input fuses, ground lug, customer terminal block, door-mounted electronic operator interface, power-on pilot light (white), run pilot light (red), fault pilot light (amber), hand/off/auto selector switch, emergency stop push button, real-time clock, and analog isolator (two isolated outputs and one isolated input).

Isolated three-contactor bypass units include an ASD/Off/Bypass selector switch, ASD Test On/Off selector switch, bypass mode pilot light (red), and ASD mode pilot light (red). They are used for system control and are all located on the enclosure door.

Isolated Solid State Starter bypass units include a door-mounted solid state starter keypad, ASD/Off/Bypass selector switch, ASD Test On/Off selector switch, solid state starter mode pilot light (red), and ASD mode pilot light (red). They are used for system control and are all located on the enclosure door.

Ordering Information: Use the following part numbering convention to configure the W7 when placing your order.

This example is for a 100 HP, 460 V "AA" style integrated 18-pulse assembly with a circuit breaker.

Example Part Number:	W7	4	##K	AA	DW	

Series:
W7B ASD

Voltage:
4 — 460
6 — 600
E — 690

Model Number:

220 — 20 HP	10K — 100 HP	35K — 350 HP
270 — 25 HP	12K — 125 HP	40K — 400 HP
330 — 30 HP	15K — 150 HP	50K — 500 HP
400 — 40 HP	17K — 175 HP	
500 — 50 HP	20K — 200 HP	
600 — 60 HP	25K — 250 HP	
750 — 75 HP	30K — 300 HP	

Style:
AA — Includes Circuit Breaker
AE — Includes Circuit Breaker, Isolated Three-contactor Bypass, Overload Protection
AS — Includes Circuit Breaker, Isolated Solid-state Bypass, Overload Protection

18-Pulse Transformer:
DW — Auto-transformer

Enclosure/Other Options:
Blank — NEMA 1 Enclosure
NC — NEMA 12 Enclosure

Notes:
- Factory authorized startup is required on all ASDs 400 HP and larger.

W7 18 Pulse ASD

460 V Assembly Unit (with NEMA 1 Enclosure)
Pricing & Dimensions

VAC	HP	FLA	Model Number	List Price	H	W	D
					Dimensions (in.)		
AA — Includes Circuit Breaker							
460	20	27	W7B4220AADW	$54,000	84	30	24
460	25	34	W7B4270AADW	$54,500	84	30	24
460	30	42	W7B4330AADW	$55,000	84	30	24
460	40	52	W7B4400AADW	$56,000	84	30	24
460	50	65	W7B4500AADW	$57,000	84	30	24
460	60	77	W7B4600AADW	$59,000	84	30	24
460	75	96	W7B4750AADW	$62,500	100	30	24
460	100	124	W7B410KAADW	$62,500	100	30	24
460	125	156	W7B412KAADW	$65,500	100	30	24
460	150	190	W7B415KAADW	$68,500	100	30	24
460	200	240	W7B420KAADW	$71,500	100	30	24
460	250	302	W7B425KAADW	$94,500	100	42	24
460	300	370	W7B430KAADW	$100,000	100	42	24
460	400	480	W7B440KAADW	$104,000	100	42	24
460	500	628	W7B450KAADW	$114,000	100	42	24

Notes:
- Factory authorized startup is required on all ASDs 400 HP and larger.

VAC	HP	FLA	Model Number	List Price	H	W	D
					Dimensions (in.)		
AE — Includes Circuit Breaker, Isolated Three-contactor Bypass, Overload Protection							
460	20	27	W7B4220AEDW	$58,000	84	54	24
460	25	34	W7B4270AEDW	$59,000	84	54	24
460	30	42	W7B4330AEDW	$60,000	84	54	24
460	40	52	W7B4400AEDW	$61,000	84	54	24
460	50	65	W7B4500AEDW	$64,500	84	54	24
460	60	77	W7B4600AEDW	$66,500	84	54	24
460	75	96	W7B4750AEDW	$73,500	100	54	24
460	100	124	W7B410KAEDW	$82,000	100	54	24
460	125	156	W7B412KAEDW	$88,500	100	54	24
460	150	190	W7B415KAEDW	$94,000	100	54	24
460	200	240	W7B420KAEDW	$96,000	100	54	24
460	250	302	W7B425KAEDW	$115,500	100	66	24
460	300	370	W7B430KAEDW	$121,000	100	66	24
460	400	480	W7B440KAEDW	$131,500	100	66	24
460	500	628	W7B450KAEDW	$147,000	100	72	24

Notes:
- Factory authorized startup is required on all ASDs 400 HP and larger.

W7 18 Pulse ASD

460 V Assembly Unit (with NEMA 1 Enclosure)

Pricing & Dimensions

VAC	HP	FLA	Model Number	List Price	H	W	D
					Dimensions (in.)		
AS — Includes Circuit Breaker, Isolated Solid-state Bypass, Overload Protection							
460	20	27	W7B4220ASDW	$62,000	84	54	24
460	25	34	W7B4270ASDW	$64,500	84	54	24
460	30	42	W7B4330ASDW	$66,500	84	54	24
460	40	52	W7B4400ASDW	$68,000	84	54	24
460	50	65	W7B4500ASDW	$70,500	84	54	24
460	60	77	W7B4600ASDW	$71,500	84	54	24
460	75	96	W7B4750ASDW	$78,000	100	54	24
460	100	124	W7B410KASDW	$86,500	100	60	24
460	125	156	W7B412KASDW	$94,500	100	60	24
460	150	190	W7B415KASDW	$100,000	100	60	24
460	200	240	W7B420KASDW	$104,000	100	60	24
460	250	302	W7B425KASDW	$126,000	100	72	24
460	300	370	W7B430KASDW	$131,500	100	84	24
460	400	480	W7B440KASDW	$145,000	100	84	24
460	500	628	W7B450KASDW	$163,000	100	114	24

Notes:

- Factory authorized startup is required on all ASDs 400 HP and larger.

W7 18 Pulse ASD

600/690 V Assembly Unit (NEMA 1 Enclosure)

Pricing & Dimensions

VAC	HP	FLA	Model Number	List Price	H	W	D
					Dimensions (in.)		
600/690	75	77	W7B6750AADW	$60,000	100	30	24
600/690	100	99	W7B610KAADW	$65,000	100	30	24
600/690	125	125	W7B612KAADW	$69,000	100	30	24
600/690	150	150	W7B615KAADW	$72,000	100	30	24
600/690	175	177	W7B617KAADW	$79,000	100	30	24
600/690	200	200	W7B620KAADW	$86,000	100	30	24
600/690	250	250	W7B625KAADW	$102,000	100	42	24
600/690	300	300	W7B630KAADW	$115,000	100	42	24
600/690	400	425	W7B640KAADW	$140,300	100	42	24

Notes:

- HP rating is based on 600 V.
- Factory authorized startup is required on all ASDs 400 HP and larger.

W7 ASD

460 V Assembly Unit (NEMA 12 Enclosure)
Pricing & Dimensions

VAC	HP	FLA	Model Number	List Price	H	W	D
					Dimensions (in.)		
AA — Includes Circuit Breaker							
460	75	96	W7B4750AADWNC	$72,000	90	38	24
460	100	124	W7B410KAADWNC	$72,500	90	38	24
460	125	156	W7B412KAADWNC	$75,000	90	38	24
460	150	190	W7B415KAADWNC	$79,000	90	40	24
460	200	240	W7B420KAADWNC	$80,000	90	40	24
460	250	302	W7B425KAADWNC	$105,000	90	64	24
460	300	370	W7B430KAADWNC	$110,000	90	64	24
460	400	480	W7B440KAADWNC	$115,000	90	64	24
460	500	628	W7B450KAADWNC	$149,000	94	64	24

VAC	HP	FLA	Model Number	List Price	H	W	D
					Dimensions (in.)		
AE — Includes Circuit Breaker, Isolated Three-contactor Bypass, Overload Protection							
460	75	96	W7B4750AEDWNC	$81,500	90	62	24
460	100	124	W7B410KAEDWNC	$89,500	90	62	24
460	125	156	W7B412KAEDWNC	$90,000	90	62	24
460	150	190	W7B415KAEDWNC	$99,000	90	64	24
460	200	240	W7B420KAEDWNC	$98,500	90	64	24
460	250	302	W7B425KAEDWNC	$119,000	90	88	24
460	300	370	W7B430KAEDWNC	$123,500	90	88	24
460	400	480	W7B440KAEDWNC	$134,000	90	88	24
460	500	628	W7B450KAEDWNC	$166,000	94	94	24

VAC	HP	FLA	Model Number	List Price	H	W	D
					Dimensions (in.)		
AS — Includes Circuit Breaker, Isolated Solid-state Bypass, Overload Protection							
460	75	96	W7B4750ASDWNC	$85,000	90	76	24
460	100	124	W7B410KASDWNC	$91,500	90	76	24
460	125	156	W7B412KASDWNC	$97,000	90	76	24
460	150	190	W7B415KASDWNC	$106,000	90	78	24
460	200	240	W7B420KASDWNC	$117,500	90	78	24
460	250	302	W7B425KASDWNC	$143,000	90	90	24
460	300	370	W7B430KASDWNC	$148,500	90	90	24
460	400	480	W7B440KASDWNC	$162,500	90	90	24
460	500	628	W7B450KASDWNC	$207,000	94	136	24

Notes:
- Factory authorized startup is required on all ASDs 400 HP and larger.

W7 ASD
Option Information & Pricing

General Options

Model Number	Description	List Price	
		NEMA 1	NEMA 12
RCABINET18	Right-mounting 18” Wide Enclosure with Blank Door	$2,800	CF
PC80150P018	Subpanel for 18” Cabinet	$500	$500
RCABINET24	Right-mounting 24” Wide Enclosure with Blank Door	$3,200	CF
PC80150P017	Subpanel for 24” Cabinet	$600	$600
RCABINET36	Right-mounting 36” Wide Enclosure with Blank Door	$3,600	CF
PC80150P019	Subpanel for 36” Cabinet	$700	$700
LCABINET18	Left-mounting 18” Wide Enclosure with Blank Door	$2,800	CF
PC80150P018	Subpanel for 18” Cabinet	$500	$500
LCABINET24	Left-mounting 24” Wide Enclosure with Blank Door	$3,200	CF
PC80150P017	Subpanel for 24” Cabinet	$600	$600
LCABINET36	Left-mounting 36” Wide Enclosure with Blank Door	$3,600	CF
PC80150P019	Subpanel for 36 “ Cabinet	$700	$700

Additional Options

Option Code	Description	List Price
RI	Control Relay — IEC, 120 V, 2 A Contacts	$100
M1	Door-mounted Volt Amp Meter Package — IEC	$350
MA	Door-mounted Output Amp Meter	$200
MF	Door-mounted Output Frequency Meter	$200
MV	Door-mounted Output Volt Meter	$200
MX	Door-mounted Miscellaneous Meter (Order by Description)	CF
PX	Miscellaneous Pilot Light — IEC (Specify Function and Indicator Color)	$75
RT	Door-mounted TIC-TPR6-14 Relay — IEC (RTD Monitor)	$4,400

Miscellaneous Options

Option Code	Description	List Price
BN	Push-button — NEMA, 30 mm, Heavy Duty, Oil Tight	$300
LN	Pilot Light — NEMA, 30 mm, Heavy Duty, Oil Tight, P-T-T, 120 V LED with Transformer 6 V Bulb (Order by Function Indicator Color)	$300
PN	Speed-control Potentiometer — NEMA, Machine Tool Duty, 120 V, A600, 10 A Contacts	$450
RN	Control Relay — NEMA, Machine Tool Duty, 120 V, A600, 10 A Contacts	$450
SN	Selector Switch — NEMA, 30 mm, Heavy Duty, Oil Tight, Two-or Three-Position	$450

CF: Consult Factory.

WX9 ASD
Specifications

The WX9 adjustable speed drive offers the latest technology and proven reliability, making this AC drive one of the most advanced modular drives on the market. Our patented 18-pulse, copper-wound, auto-transformer design masters the needs of customer's applications by providing a reliable and efficient adjustable speed drive that eliminates significant harmonic content to the power grid. Virtual Line Pump (VLP) creates an operating domain within the drive that is directly and proportionately related to the specific system to which it is connected.

Product Scope

18-Pulse: 460 V at 500 to 800 HP

Highlights

- Patented 18-Pulse, Copper-Wound, Input Auto-Transformer Design
- Up to 60% Reduction in Transformer Losses
- VLP - Virtual Linear Pump Technology
- Common Bus Connection - Modular Inverter/Rectifier Assembly
- Small Footprint with Uniform 32" Depth on All Models
- Meet IEEE 519-1992 Guidelines without Added Filters
- 100% Continuous Overload Rating, 120% for 60 Seconds
- Eight Programmable Discrete Inputs with Selectable Sync or Source Logic
- Three Programmable Discrete Output Contacts: Two Form-A Contacts & One Form-C Contact
- Three Programmable Analog Inputs: One 0 to 20 mA or 0 to 10 VDC, One 0 to 10 VDC, & One ±10 VDC
- Two Programmable Analog Outputs: One 4 to 20 mA or 0 to 10 VDC & One 4 to 20 mA Isolated Output
- Analog Isolator: Two Isolated Outputs & One Isolated Input
- Half/Full Duplex RS232/RS485 & TTL Communication Ports

Standard Features

- NEMA 1, IP20, Gasket & Filter Enclosure
- Input Fuses
- Ground Lug
- 65,000 AIC Breaker
- Customer Terminal Block
- Built-In Real-Time Clock
- EOI: Door-Mounted, Backlit Plain-English LCD Display
- Ambient Temperature: 14° to 104°F (-10° to 40°C)
- Humidity: 95% Non-Condensing
- Altitude: Up to 1000 Meters without Derate
- Standards/Compliance: UL Listed in US & Canada

WX9 ASD

Part Numbering Convention

The WX9 series ASD is available with commonly used options such as manual bypass and input circuit breakers in an easy-to-install package. The inverter, rectifier and 18-pulse transformer are modulized and constructed in a separated enclosure.

The WX9 ASD includes an auto-transformer, input fuses, ground lug, customer terminal block, door-mounted electronic operator interface, power-on pilot light (white), run pilot light (red), fault pilot light (amber), hand/off/auto selector switch, emergency stop push button, real-time clock, RJ45 front door connection and analog isolator (two isolated outputs and one isolated input).

Isolated three-contactor bypass units include an ASD/Off/Bypass selector switch, ASD Test On/Off selector switch, bypass mode pilot light (red), and ASD mode pilot light (red). They are used for system control and are all located on the enclosure door.

Isolated solid state starter bypass units include a door-mounted solid state starter keypad, ASD/Off/Bypass selector switch, ASD Test On/Off selector switch, solid state starter mode pilot light (red), and ASD mode pilot light (red). They are used for system control and are all located on the enclosure door.

Ordering Information: Use the following part numbering convention to configure the WX9 when placing your order.

This example is for a 800 HP, 460 V "AA" style integrated 18-pulse assembly with a circuit breaker.

Example Part Number:	W7	4	##K	AA	DW	

Series:
WX9 ASD

Voltage:
4 — 460

Model Number:

Example: WX9480KAXAADW
AX - Modular Drives

50K — 500 HP
60K — 600 HP
70K — 700 HP
80K — 800 HP

Style:
AA — Includes Circuit Breaker
AE — Includes Circuit Breaker, Isolated Three-contactor Bypass, Overload Protection
AS — Includes Circuit Breaker, Isolated Solid-state Bypass, Overload Protection

18-Pulse Transformer:
DW — Auto-transformer

Enclosure/Other Options:
Blank — NEMA 1 Enclosure

Notes:
- Factory authorized startup is required on all ASDs.

WX9 ASD

460 V Assembly Unit (NEMA 1 Enclosure)
Pricing & Dimensions

VAC	HP	FLA	Model Number	List Price	H	W	D
					Dimensions (in.)		
460	500	628	WX9450KAXAADW	$200,500	97.5	64	32
460	600	740	WX9460KAXAADW	$204,500	97.5	64	32
460	700	900	WX9470KAXAADW	$207,500	97.5	64	32
460	800	960	WX9480KAXAADW	$210,500	97.5	64	32

Notes:
- Factory authorized startup is required on all WX9 ASDs.
- CF = Consult Factory.

Plus Pack ASD
Specifications

The Plus Pack outdoor adjustable speed drive revolutionized the industry by combining Toshiba's robust Plus Pack technology and Toshiba's proprietary, ground-breaking Virtual Linear Pump (VLP®) technology. VLP technology allows the Plus Pack to directly, precisely, and linearly control pressure, temperature, level, or flow using single or multiple devices while balancing the load between them. This innovative drive is designed to withstand even the harshest of conditions and is engineered to provide tight speed control, while offering the industry's most user-friendly operator interface.

Product Scope

380 to 480 V
6-Pulse: 60 to 1500 HP
12-Pulse: 60 to 1500 HP
18-Pulse: 60 to 800 HP

Highlights

- Proprietary VLP® Technology
- No Flow/Low NPSH Cut-Off
- Maximized Energy Savings on Variable Torque Loads
- Time-Based Alternation
- Regenerative Power Ride Through
- 18-Pulse Diode Front-End (Option)
- Non Air-to-Air Heat Exchangers
- 100% Continuous Overload Rating, 120% for 60 Seconds
- Eight Programmable Discrete Inputs with Selectable Sync or Source Logic
- Three Programmable Discrete Output Contacts: Two Form-A Contacts & One Form-C Contact
- Three Programmable Analog Inputs: One 0 to 20 mA or 0 to 10 VDC, One 0 to 10 VDC, & One ±10 VDC
- Two Programmable Analog Outputs: One 4 to 20 mA or 0 to 10 VDC & One 4 to 20 mA Isolated Output
- Half/Full Duplex RS485/RS232 & TTL Communication Ports
- Auto-Restart Operation/Catch a Spinning Motor

Standard Features

- NEMA 1 or NEMA 3R Enclosure
- 18-Pulse Auto Phase-Shifting Transformer (Optional)
- Built-In, Real-Time Clock
- Two Protective Function Activation Relay Contact Outputs
- Past Trip Monitoring: Stores the Last Four Faults in Succession, Along with Cumulative At-Trip Times
- EOI: Four-Digit/Seven-Digit LED Display
- Save, Restore, & Clone Multiple Drive Settings
- Ambient Temperature: 14° to 122°F (-10° to 50°C)
- Altitude: Up to 1500 Meters without Derate
- Humidity: 95% Non-Condensing
- Standards/Compliances: IEEE, UL Listed in US & Canada, NEMA, NEC, & American Recovery & Reinvestment Act Compliant (ARRA)

Plus Pack ASD

Part Numbering Convention

The Plus Pack is a special configuration, larger horsepower, 7-series ASD. The NEMA 3R version is specifically designed for outdoor applications including white paint (indoor units are painted ANSI 61 grey). The Plus Pack has a 1.0 service factor. In addition, this drive includes input fuses, input disconnect, locking cabinet, and grounding lug.

Use the following part numbering system when ordering a Plus Pack.

Example Part Number:	HX7+D	4	##0/##K/##L	CB

Series:
HX7+D — HX7 Plus Pack Rev. D

Voltage:
4 — 460

Model Number:

660 — 60 HP	60K — 600 HP
830 — 75 HP	70K — 700 HP
11K — 100 HP	81K — 800 HP
16K — 150 HP	93K — 900 HP
20K — 200 HP	10L — 1000 HP
26K — 250 HP	12L — 1200 HP
39K — 350 HP	14L40 — 1400 HP
45K — 400 HP	15L40 — 1500 HP
51K40 — 500 HP	

Style:
CB — NEMA 3R, Includes Input Circuit Breaker
CB1 — NEMA 1, Includes Input Circuit Breaker
CC — NEMA 3R, Includes 12-pulse Input Circuit Breaker
CC1 — NEMA 1, Includes 12-pulse Input Circuit Breaker
CD — NEMA 3R, Includes 18-pulse Input Circuit Breaker

Notes:
- Plus Pack units do not include dynamic braking transistors as standard.
- Factory authorized startup is required on all ASDs 400 HP and larger.
- 12-pulse drives require a 12-pulse phase-shifting transformer (not included).
- Height dimensions listed include removable eyebolts and base.
- Width dimensions listed include heat exchanger.
- Depth dimensions listed include door devices.
- 500, 1400, and 1500 HP Plus Packs are rated 40°C maximum.
- NEMA 3R, includes 18-pulse, phase-shifting auto-transformer.

Plus Pack ASD

6-Pulse & 12 Pulse Unit (NEMA 1 Enclosure)
Pricing & Dimensions

VAC	HP	FLA	Model Number	List Price	H	W	D	Shipping Weight (lbs.)
					Dimensions (in.)			
6-Pulse Unit								
460	250	313	HX7+D426KCB1	$42,000	81.5	37.0	40.0	1200
460	350	469	HX7+D439KCB1	$49,000	81.5	37.0	40.0	1200
460	400	546	HX7+D445KCB1	$56,000	81.5	37.0	40.0	1200
460	500	623	HX7+D451K40CB1	$63,000	81.5	37.0	40.0	1500
460	600	722	HX7+D460KCB1	$89,000	81.5	72.0	46.0	2000
460	700	842	HX7+D470KCB1	$93,000	81.5	72.0	46.0	2000
460	800	980	HX7+D481KCB1	$113,000	81.5	72.0	46.0	2000
460	900	1121	HX7+D493KCB1	$123,000	81.5	72.0	46.0	2000
460	1000	1203	HX7+D410LCB1	$132,000	82.5	84.0	46.0	3500
460	1200	1443	HX7+D412LCB1	$153,000	82.5	84.0	46.0	3500
460	1400	1684	HX7+D414L40CB1	$174,000	82.5	84.0	46.0	3500
460	1500	1804	HX7+D415L40CB1	$195,000	82.5	84.0	46.0	3500

VAC	HP	FLA	Model Number	List Price	H	W	D	Shipping Weight (lbs.)
					Dimensions (in.)			
12-Pulse Unit								
460	250	313	HX7+D426KCC1	$46,000	81.5	37.0	40.0	1200
460	350	469	HX7+D439KCC1	$53,000	81.5	37.0	40.0	1200
460	400	546	HX7+D445KCC1	$60,000	81.5	37.0	40.0	1200
460	500	623	HX7+D451K40CC1	$68,000	81.5	37.0	40.0	1500
460	600	722	HX7+D460KCC1	$95,000	81.5	72.0	46.0	2000
460	700	842	HX7+D470KCC1	$101,000	81.5	72.0	46.0	2000
460	800	980	HX7+D481KCC1	$121,000	81.5	72.0	46.0	2000
460	900	1121	HX7+D493KCC1	$131,000	81.5	72.0	46.0	2000
460	1000	1203	HX7+D410LCC1	$142,000	82.5	84.0	46.0	3500
460	1200	1443	HX7+D412LCC1	$165,000	82.5	84.0	46.0	3500
460	1400	1684	HX7+D414L40CC1	$186,000	82.5	84.0	46.0	3500
460	1500	1804	HX7+D415L40CC1	$207,000	82.5	84.0	46.0	3500

Notes:
- Dimensions and weights are for estimation purposes only — height dimensions listed include removable eyebolts and base; width dimensions listed include heat exchanger; depth dimensions listed include door devices.
- Factory authorized startup is required on all ASDs 400 HP and larger.
- 500, 1400, and 1500 HP Plus Packs are rated 40°C maximum.
- Plus Pack units do not include dynamic braking transistors as standard.
- 12-pulse drives require a 12-pulse phase-shifting transformer (not included).

Plus Pack ASD

6-Pulse & 12 Pulse Unit (NEMA 3R Enclosure)

Pricing & Dimensions

VAC	HP	FLA	Model Number	List Price	H	W	D	Shipping Weight (lbs.)
					Dimensions (in.)			
6-Pulse Unit								
460	60	79	HX7+D4660CB	$28,000	81.5	25.0	35.0	1000
460	75	100	HX7+D4830CB	$29,000	81.5	25.0	35.0	1000
460	100	133	HX7+D411KCB	$31,000	81.5	25.0	35.0	1000
460	150	196	HX7+D416KCB	$36,000	81.5	31.5	35.0	1000
460	200	241	HX7+D420KCB	$38,000	81.5	31.5	35.0	1000
460	250	313	HX7+D426KCB	$47,000	81.5	46.0	42.0	1200
460	350	469	HX7+D439KCB	$57,000	81.5	46.0	42.0	1200
460	400	546	HX7+D445KCB	$64,000	81.5	46.0	42.0	1200
460	500	623	HX7+D451K40CB	$73,000	81.5	61.0	42.0	1500
460	600	722	HX7+D460KCB	$96,000	81.5	90.0	48.0	2000
460	700	842	HX7+D470KCB	$100,000	81.5	90.0	48.0	2000
460	800	980	HX7+D481KCB	$119,000	81.5	90.0	48.0	2000
460	900	1121	HX7+D493KCB	$130,000	81.5	90.0	48.0	2000
460	1000	1203	HX7+D410LCB	$159,000	82.5	110.0	48.0	3500
460	1200	1443	HX7+D412LCB	$182,000	82.5	110.0	48.0	3500
460	1400	1684	HX7+D414L40CB	$195,000	82.5	110.0	48.0	3500
460	1500	1804	HX7+D415L40CB	$210,000	82.5	110.0	48.0	3500

VAC	HP	FLA	Model Number	List Price	H	W	D	Shipping Weight (lbs.)
					Dimensions (in.)			
12-Pulse Unit								
460	60	79	HX7+D4660CC	$30,000	81.5	25.0	35.0	1000
460	75	100	HX7+D4830CC	$31,000	81.5	25.0	35.0	1000
460	100	133	HX7+D411KCC	$35,000	81.5	25.0	35.0	1000
460	150	196	HX7+D416KCC	$38,000	81.5	31.5	35.0	1000
460	200	241	HX7+D420KCC	$41,000	81.5	31.5	35.0	1000
460	250	313	HX7+D426KCC	$50,000	81.5	46.0	42.0	1200
460	350	469	HX7+D439KCC	$61,000	81.5	46.0	42.0	1200
460	400	546	HX7+D445KCC	$68,000	81.5	46.0	42.0	1200
460	500	623	HX7+D451K40CC	$77,000	81.5	61.0	42.0	1500
460	600	722	HX7+D460KCC	$102,000	81.5	90.0	48.0	2000
460	700	842	HX7+D470KCC	$107,000	81.5	90.0	48.0	2000
460	800	980	HX7+D481KCC	$127,000	81.5	90.0	48.0	2000
460	900	1121	HX7+D493KCC	$138,000	81.5	90.0	48.0	2000
460	1000	1203	HX7+D410LCC	$169,000	82.5	110.0	48.0	3500
460	1200	1443	HX7+D412LCC	$194,000	82.5	110.0	48.0	3500
460	1400	1684	HX7+D414L40CC	$207,000	82.5	110.0	48.0	3500
460	1500	1804	HX7+D415L40CC	$223,000	82.5	110.0	48.0	3500

Notes:

- Dimensions and weights are for estimation purposes only — height dimensions listed include removable eyebolts and base; width dimensions listed include heat exchanger; depth dimensions listed include door devices.
- 60 to 100 HP do not utilize heat exchanger.
- 500, 1400, and 1500 HP Plus Packs are rated 40°C maximum.
- Factory authorized startup is required on all ASDs 400 HP and larger.
- Plus Pack units do not include dynamic braking transistors as standard.
- 12-pulse drives require a 12-pulse phase-shifting transformer (not included).

Plus Pack ASD

18 Pulse Unit (NEMA 3R Enclosure)
(Phase Shifting AutoTransformer Included)
Pricing & Dimensions

VAC	HP	FLA	Model Number	List Price	H	W	D	Shipping Weight (lbs.)
					Dimensions (in.)			
460	60	79	HX7+D4660CD	$62,000	81.5	70.0	35.0	2550
460	75	100	HX7+D4830CD	$65,000	81.5	70.0	35.0	2550
460	100	133	HX7+D411KCD	$68,000	81.5	70.0	35.0	2550
460	150	196	HX7+D416KCD	$75,000	81.5	70.0	35.0	2550
460	200	241	HX7+D420KCD	$82,000	81.5	70.0	35.0	2550
460	250	313	HX7+D426KCD	$104,000	81.5	93.5	44.0	3425
460	350	469	HX7+D439KCD	$121,000	81.5	93.5	44.0	3650
460	400	546	HX7+D445KCD	$135,000	81.5	93.5	44.0	3900
460	500	623	HX7+D451K40CD	$166,000	81.5	93.5	44.0	3900
460	600	722	HX7+D460KCD	$198,000	81.5	130.0	46.5	5700
460	700	842	HX7+D470KCD	$222,000	81.5	130.0	46.5	5775
460	800	980	HX7+D481KCD	$252,000	81.5	130.0	46.5	5775

Notes:

- Dimensions and weights are for estimation purposes only — height dimensions listed include removable eyebolts and base; width dimensions listed include heat exchanger; depth dimensions listed include door devices.
- 18-pulse drives have an integrated 18-pulse phase-shifting transformer.
- 500 HP 18-pulse Plus Pack is rated 40°C maximum.
- Factory authorized startup is required on all ASDs 400 HP and larger.
- Plus Pack units do not include dynamic braking transistors as standard.

Plus Pack ASD

Option Information & Pricing

Installed Isolated Bypass

Option Code	Description	List Price
AE	60 HP Isolated Three-contactor Bypass	$11,020
	75 HP Isolated Three-contactor Bypass	$11,950
	100 HP Isolated Three-contactor Bypass	$12,840
	150 HP Isolated Three-contactor Bypass	$14,570
	200 HP Isolated Three-contactor Bypass	$15,020
	250 HP Isolated Three-contactor Bypass	$27,240
	350 HP Isolated Three-contactor Bypass	$27,570
	400 HP Isolated Three-contactor Bypass	$29,910
	500 HP Isolated Three-contactor Bypass	$37,550
	600 HP Isolated Three-contactor Bypass	$37,770
	700 HP Isolated Three-contactor Bypass	$37,770
	800 HP Isolated Three-contactor Bypass	$37,770

Notes:
- Bypasses are only available for 6-pulse drives. Consult factory for 900 HP and larger size drives on option availability.
- Dimensions will be significantly affected with bypass adders.

Installed Dynamic Braking Transistors

Option Code	Description	List Price
DB	60 to 100 HP IGBT7	$1,200
	150 to 200 HP IGBT7	$1,500
	250 HP IGBT7	$1,600
	350 to 500 HP IGBT7	$2,000
	600 to 1500 HP IGBT7	$3,000

Notes:
- Plus Packs 250 HP and above must use the 250 HP heavy duty dynamic braking resistor.
- Larger units have limited braking capacity.

Plus Pack ASD

Option Information & Pricing

Installed Junction Boxes

Option Code	Description	List Price
JB	60 to 100 HP Junction Box	$1,350
	150 to 500 HP Junction Box (Standard on 518 kVA CB CC)	$2,225
	600 to 800 HP Junction Box	$3,900
	900 to 1500 HP Junction Box	$4,450

Notes:
- Junction box included on 18-pulse units.

Installed DC Link Reactors

Option Code	Description	List Price
RD	150 HP-Installed DC Link Reactor	$2,000
	200 HP-Installed DC Link Reactor	$2,475
	250 HP-Installed DC Link Reactor	$2,750
	350 HP-Installed DC Link Reactor	$3,300
	400 HP-Installed DC Link Reactor	$3,575
	500 HP-Installed DC Link Reactor	$5,000
	600 HP-Installed DC Link Reactor	$6,000
	700 HP-Installed DC Link Reactor	$7,250
	800 HP-Installed DC Link Reactor	$7,500
	900 HP-Installed DC Link Reactor	$10,000
	1000 HP-Installed DC Link Reactor	$11,000
	1200 HP-Installed DC Link Reactor	$12,000
	1400 HP-Installed DC Link Reactor	$14,000
	1500 HP-Installed DC Link Reactor	$16,000

Notes:
- 60 to 100 HP Plus Pack power units do not have DC link reactor option connection points.
- DC link reactors included on 18-pulse units.

Installed Raycap Surge Suppressors

Option Code	Description	List Price
SS	Installed Raycap Surge Suppressors for CB & CD Units	$3,000
	Installed Raycap Surge Suppressors for CC Units	$6,000

Low Voltage ASD Options

G9, P9, AS1 ASD Options

Communication Cards, Closed-Loop Cards, Keypads, Cables, & Cooling

Part Number	Description	Price
DEV002Z	DeviceNet Communications Option Module Snaps Directly onto Drive Mounts Behind Drive Keypad Control Panel	$255
PDP002Z	Profibus DP Communications Option Module Snaps Directly onto Drive Mounts Behind Drive Keypad Control Panel	$300
MBP001Z	ModBus Plus Communications Option Module Snaps Directly onto Drive Mounts Behind Drive Keypad Control Panel	$400
MBE001Z	ModBus TCP Communications Option Module Snaps Directly onto Drive Mounts Behind Drive Keypad Control Panel	$600
ASD-G9ETH	Ethernet IP Communications Option Module Snaps Directly onto Drive Mounts Behind Drive Keypad Control Panel Supports: Ethernet IP Modbus/TCP Bacnet Profinet IO	$900
ETB003Z	I/O Terminal Block can be Added to Enhance your System for Extra Compatibility with Wide Range of Systems: Four Discrete Inputs One Open-Collector Outputs One Thermal-Trip Input Form-C Output (One Circuit) Only One ETB003Z Card can be Used Per Drive	$175

Low Voltage ASD Options

G9, P9, AS1 ASD Options

Communication Cards, Closed-Loop Cards, & Communication Cables

Part Number	Description	Price
ETB004Z	I/O Terminal Block can be Added to Enhance for Extra Compatibility with a Wide Range of Systems: Four Discrete Inputs One Open-Collector Outputs One Thermal-Trip Input Form-C Output (One Circuit) Two Analog Inputs Two Analog Outputs Only One ETB004Z Card can be Used Per Drive	$300
ETB006Z	120 V Logic Input Adapter Wires into Drive Terminal Block Contains Seven 120 VAC Inputs that Control Discrete Inputs Compatible with G9/P9 Drives Frames 6 and Above, as well as All AS1 Drives	$145
USB-485-2W	2-Wire RS485 to USB Cable for PC to ASD Compatible with G9, P9, AS3, AS1, S15, Plus Pack, W7, GX7, GX9, GX7M	$150
VEC004Z	Type-2 Push Pull/Open Collector 12 V Printed Circuit Board Connects/Mounts Internally to Drive, Behind Drive Keypad Control Panel	$150
VEC005Z	Type-2 Push Pull/Open Collector 15 V Printed Circuit Board Connects/Mounts Internally to Drive, Behind Drive Keypad Control Panel	$150
VEC006Z	Type-2 Push Pull/Open Collector 24 V Printed Circuit Board Connects/Mounts Internally to Drive, Behind Drive Keypad Control Panel	$150
VEC007Z	Type-1 RS422 (Line Driver) 5 V Encoder Card Printed Circuit Board Connects/Mounts Internally to Drive, Behind Drive Keypad Control Panel	$150
ASD-TB1-SIM9	Input Simulator Replaces Standard Terminal Strip on any G9/P9 Drive Emulates Input/Output Control Signals of Drive Using Switches, Potentiometers, Indicators	$300

Low Voltage ASD Options

G9, P9, AS1 ASD Options

Remote Keypads & Cables

Part Number	Description	Price
ASD-EOI-N4-G9	G9 NEMA 4 Keypad Keypad Should Not be Exposed to Direct Sunlight	$750
ASD-EOI-N4-P9	P9 NEMA 4 Keypad Keypad Should Not be Exposed to Direct Sunlight	$750
ASD-MTG-KIT9	Remote-mount Kit for G9 EOI Frame 2 to 5 EOI Extender Cable ASD-CABxF is Required (Not Included with Drive)	$300
ASD-MTG-KIT	Remote-mount Kit for G9/P9 EOI Frame 6 to 13 EOI Extender Cable ASD-CABxF may be Required if Keypad is Remote-mounted Beyond Reach of EOI Cable Provided with Drive	$100
ASD-MTG-KIT-P9	Remote-mount Kit for P9 EOI Frame 2 to 5 EOI Extender Cable ASD-CABxF is Required (Not Included with Drive)	$300
ASD-BPC	EOI Panel Cover Provides Dust Protection when G9/P9 Keypad has been Remotely Mounted or Removed on Frame 6 to 13	$85
ASD-CAB7F	7-foot EOI Extender Cable with Ferrite Cores	$45
ASD-CAB10F	10-foot EOI Extender Cable with Ferrite Cores	$65
ASD-CAB15F	15-foot EOI Extender Cable with Ferrite Cores	$75

Low Voltage ASD Options

GX7, GX9, W7, Plus Pack ASD Options

Internal Communication/Multi-Function Cards

Part Number	Description	Price
TTL-MOD-485	TTL to 2-Wire RS485 Converter with Two Female RJ45 Connections (Input and Output) Used with 7-series Control Boards (Plus Pack, W7, GX7, GX9, GX7M)	$250
USB-485-2W	2-Wire RS485 to USB Cable for PC to ASD Compatible with G9, P9, AS3, AS1, S15, Plus Pack, W7, GX7, GX9, GX7M	$150
ASD-TB1-ACI	120 V Logic Input Board Replaces Terminal Strip Supplies Dry Contact Closures to Control GX7, GX9, GX7R, GX7M, W7, Plus Pack	$450
ASD-ISO-1	Terminal Strip Signal Isolator Daughter Board Mounts onto Factory Terminal Strip and Provides Isolation of Control Board Output Circuit from AM/FM Output from II Input	$300
ASD-MULTICOM-A	Vector Feedback Card Supports Line Driver, Open-collector Encoders, Multiple Network Communication Protocols, Including: Profibus Modbus RTU DeviceNet	$1,520
ASD-MULTICOM-B	Vector Feedback, Line Driver, Open-collector, Pulse-speed Command, Process PID Control	$950
ASD-NANOCOM	Multi-protocol Communication Interface Provides RS485-based Network Connectivity (Currently Supports Modbus RTU Metasys N2) Chip Plugs Directly into B-version of 7-series ASDs Not Compatible with HX7+D Plus Pack	$350

Low Voltage ASD Options
External Gateway Options

External Communication Options

Part Number	Description	Price
XLTR-200	Multi-protocol Network Gateway Supports: Modbus RTU Metasys N2 Siemens FLN One Unit Connects up to Three Drives Requires One CAB00xx-0A Cable per Drive	$800
ETH-200	Multi-protocol Network Gateway Supports: Ethernet IP Modbus TCP Modbus RTU One Unit Connects up to Three Drives Requires One CAB00xx-0A Cable per Drive	$1,100
EXT-PROFIBUS	Network Gateway Supports ProfibusDP One Unit Connects up to Two Drives Requires One CAB00xx-0A Cable per Drive	$1,150
EXT-MODBUS+	Network Gateway Supports Modbus+ One Unit Connects up to Three Drives Requires One CAB00xx-0A Cable per Drive	$1,450
DNET-100	Network Gateway Supports DeviceNet One Unit Connects up to Three Drives Requires One CAB00xx-0A Cable per Drive	$1,050

Notes:
- Options are available for 7-Series and S11 ASDs.

Low Voltage ASD Options

External Gateway Options

Millennium Series Communication Options

Part Number	Description	Price
DNET-1000	Network Gateway that Supports the Following Protocols: DeviceNet Modbus RTU BACnet MS/TP Metasys N2 Requires TTL-MOD-485 Adapter if Used with Plus Pack Series Drive	$1,350
ECAT-1000	Network Gateway that Supports the Following Protocols: EtherCAT Modbus RTU BACnet MS/TP Metasys N2 Requires TTL-MOD-485 Adapter if Used with Plus Pack Series Drive	$1,350
ETH-1000	Network Gateway that Supports the Following Protocols: AB CSP (PCCC) EtherNet/IP BACnet/IP BACnet MS/TP Modbus/TCP Modbus RTU Profinet IO Metasys N2 Requires TTL-MOD-485 Adapter if Used with Plus Pack Series Drive	$1,250
PBDP-1000	Network Gateway that Supports the Following Protocols: Profibus DP Modbus RTU BACnet MS/TP Metasys N2 Requires TTL-MOD-485 Adapter if Used with Plus Pack Series Drive	$1,350
XLTR-1000	Network Gateway that Supports the Following Protocols: Modbus RTU BACnet MS/TP Metasys N2 Requires TTL-MOD-485 Adapter if Used with Plus Pack Series Drive	$800

Notes:

- Options are available for 7-Series and 9-Series ASDs. Consult factory for installation/setup.

Low Voltage ASD Options

G9, P9, AS1 ASD Installed Options

Installed Communication Cables & Closed-Loop Cards

Part Number	Description	Price
CD	DEV002Z DeviceNet Communications Option Module Snaps Directly onto Drive Mounts Behind Drive Keypad Control Panel	$755
CF	PDP002Z Profibus DP Communications Option Module Snaps Directly onto Drive Mounts Behind Drive Keypad Control Panel	$800
CH	MBP001Z ModBus Plus Communications Option Module Snaps Directly onto Drive Mounts Behind Drive Keypad Control Panel	$900
CP	MBE001Z ModBus TCP Communications Option Module Snaps Directly onto Drive Mounts Behind Drive Keypad Control Panel	$1,100
CQ	ASD-G9ETH Ethernet IP Communications Option Module Snaps Directly onto Drive Mounts Behind Drive Keypad Control Panel Supports: Ethernet IP Modbus/TCP Bacnet Profinet IO	$1,400

Low Voltage ASD Options

G9, P9, AS1 ASD Installed Options

Installed Communication Cables & Closed-Loop Cards

Part Number	Description	Price
CE	ETB003Z I/O Terminal Block Can be Added to Enhance your System for Extra Compatibility with a Wide Range of Systems: Four Discrete Inputs One Open-Collector Outputs One Thermal-Trip Input Form-C Output (One Circuit) Only One ETB003Z Card Can Be Used per Drive	$675
CT	ETB004Z I/O Terminal Block Can be Added to Enhance your System for Extra Compatibility with a Wide Range of Systems: Four Discrete Inputs One Open-Collector Outputs One Thermal-Trip Input Form-C Output (One Circuit) Two Analog Inputs Two Analog Outputs Only One ETB004Z Card Can Be Used per Drive	$800
CN	ETB006Z 120 V Logic Input Adapter Wires into Drive Terminal Block and has Seven 120 VAC Inputs that Control Discrete Inputs (Compatible with G9/P9 Drives Frames 6 and Above and All AS1 Drives)	$645
CV	VEC004Z Type-2 Push Pull/Open Collector 12 V Printed Circuit Board Connects/Mount Internally to Drive, Behind Drive Keypad Control Panel	$650
CV	VEC005Z Type-2 PPush Pull/Open Collector 15 V Printed Circuit Board Connects/Mount Internally to Drive, Behind Drive Keypad Control Panel	$650
CV	VEC006Z Type-2 PPush Pull/Open Collector 24 V Printed Circuit Board Connects/Mount Internally to Drive, Behind Drive Keypad Control Panel	$650
CU	VEC007Z Type-1 RS422 (Line Driver) 5 V Encoder Card Printed Circuit Board Connects/Mount Internally to Drive, Behind Drive Keypad Control Panel	$650

Notes:

- Please consult factory when selecting options CV or CU.

Low Voltage ASD Options

GX7, GX9, W7, Plus Pack ASD Installed Options

Part Number	Description	Price
CN	120 V Logic Input Board Replaces Terminal Strip Supplies Dry Contact Closures to Control GX7, GX9, GX7R, GX7M, W7, Plus Pack	$950
X7	Terminal Strip Signal Isolator Daughter Board Mounts onto Factory Terminal Strip and Provides Isolation of Control Board Output Circuit from AM/FM Output from the II Input Standard in W7 ASD	$800

Installed Communication Cards & Closed-Loop Cards

Part Number	Description	Price
C1	Installed (ASD-MULTICOM-A) Vector Feedback Multi-protocol Communications Card Supports Line Driver, Open-collector Encoders, Multiple Network Communication Protocols Including: Profibus Modbus RTU DeviceNet	$2,020
CU	Installed (ASD-MULTICOM-B) Vector Feedback, Line Driver, Open-collector, Pulse-speed Command, Process PID Control	$1,450

Low Voltage ASD Options

NetPac®

Part Number	Description	Price
NETPAC-USB	Toshiba NetPac Wireless Connector for Computer USB Port	$250
NETPAC-2-2C	Toshiba NetPac Wireless Connector for 2-Wire RS-485, Includes Two Centimeter Long Cable	$250
NETPAC-2-2F	Toshiba NetPac Wireless Connector for 2-Wire RS-485, Includes Two Foot Long Cable	$250
NETPAC-2-2M	Toshiba NetPac Wireless Connector for 2-Wire RS-485, Includes Two Meter Long Cable	$250
NETPAC-4-2C	Toshiba NetPac Wireless Connector for 4-Wire RS-485, Includes Two Centimeter Long Cable	$250
NETPAC-4-2F	Toshiba NetPac Wireless connector for 4-Wire RS-485, Includes Two Foot Long Cable	$250
NETPAC-4-2M	Toshiba NetPac Wireless connector for 4-Wire RS-485, Includes Two Meter Long Cable	$250

NetPac® Compatibility Chart

Part Number	S11	S15	G9	P9	AS3	AS1	Plus Pack	W7	GX9
NETPAC-2-2C	N/A	REC	OK	OK	OK	OK	OK	OK	OK
NETPAC-2-2F	N/A	REC	OK	OK	OK	OK	OK	OK	OK
NETPAC-2-2M	N/A	REC	OK	OK	OK	OK	OK	OK	OK
NETPAC-4-2C	N/A	N/A	REC	REC	OK	OK	REC*	REC	REC
NETPAC-4-2F	N/A	N/A	REC	REC	OK	OK	REC*	REC	REC
NETPAC-4-2M	N/A	N/A	REC	REC	OK	OK	REC*	REC	REC

Notes:

- REC: Recommended for this particular model.
- REC*: Requires the 9-series keypad on HX7+D model to be removed.
- N/A: May not be applied.
- OK: May be applied to this model, a different model may be better for the application.

Low Voltage ASD Options
Installed Gateway Options

Installed External Communication Options

Part Number	Description	Price
CG	Multi-protocol Network Gateway Supports: Modbus RTU, Metasys N2, Siemens FLN One Unit Connects up to Three Drives Includes Option Connection Cable (CAB0011-0A)	$1,300
CQ	Multi-protocol Network Gateway Supports: Ethernet IP Modbus TCP Modbus RTU One Unit Connects up to Three Drives Includes Option Connection Cable (CAB0011-0A)	$1,600
CF	Network Gateway Supports: ProfibusDP One Unit Connects up to Two Drives Includes Option Connection Cable (CAB0011-0A)	$1,650
CH	Network Gateway Supports: Modbus Plus One Unit Connects up to Three Drives Includes Option Connection Cable (CAB0011-0A)	$1,950
CD	Network Gateway Supports: DeviceNet One Unit Connects up to Three Drives Includes Option Connection Cable (CAB0011-0A)	$1,550

Notes:
- Options are available for 7-Series and S11 ASDs.

Low Voltage ASD Options

Common Installed ASD Options

Installed Buttons

Part Number	Description	Price
BA	Automatic Bypass upon ASD Fault for Units with Bypass	$600
B1	Non-illuminated Push-button Black Button for Stop Red Button for Start Controls ASD Only	$600
BJ	Jog Push-button	$300
BX	Miscellaneous Push-button	$300

Notes:
- For NEMA-rated add $150 to list price.

Installed Space Heaters

Part Number	Description	Price
HM	Motor Space Heater	$400
HS	Cabinet Anti-condensation Space Heater Powered by Incoming Power Activated when ASD is Not Running	$500
HT	Cabinet Space Heater Powered by Incoming Power Thermostat Controlled	$600
T2	200 VA 120 V CPT for Motor Space Heater Power	$300

Notes:
- Voltage and wattage ratings required when specifying HM option.
- Motor space heater will be remotely powered by customer's power supply unless T2 option is also specified.
- Some motors may require CPT larger than 200 VA.

Low Voltage ASD Options
Common Installed ASD Options

Installed Thermal-Overload Relays

Part Number	Description	Price
LA	0.25 HP Overload Relay	$150
LB	0.33 HP Overload Relay	$150
LC	0.5 HP Overload Relay	$150
LD	0.75 HP Overload Relay	$150
LE	1 HP Overload Relay	$150
LF	1.5 HP Overload Relay	$150
LG	2 HP Overload Relay	$150
LH	3 HP Overload Relay	$150
L J	5 HP Overload Relay	$150
LK	7.5 HP Overload Relay	$200
LL	10 HP Overload Relay	$200
LM	15 HP Overload Relay	$200
LN	20 HP Overload Relay	$200
LP	25 HP Overload Relay	$200
LQ	30 HP Overload Relay	$250
LR	40 HP Overload Relay	$250
LS	50 HP Overload Relay	$250
LT	60 HP Overload Relay	$450
LU	75 HP Overload Relay	$450
LW	100 HP Overload Relay	$450
LY	125 HP Overload Relay	$450
LZ	150 HP Overload Relay	$450
L1	200 HP Overload Relay	$500
L2	250 HP Overload Relay	$500
L3	300 HP Overload Relay	$500
L4	350 HP Overload Relay	$500
L5	400 HP Overload Relay	$550

Low Voltage ASD Options

Common Installed ASD Options

Installed Meters

Part Number	Description	Price
M1	Output Voltage Current Meter Package	$350
MA	Output Current Meter	$200
ME	Elapsed Time Meter	$200
MF	Output Frequency Meter	$200
MV	Output Voltage Meter	$200
MX	Miscellaneous Meter Order by Description	CF
RT	RTD Monitor/Relay 12 RTD Inputs (Accepts Pt100, Ni100, Ni120, and Cu10 RTDs) Door-mount Display	$4,400

Notes:
- AM and FM analog outputs are used for meter display.
- Please consult factory for availability and pricing if more than two meters are needed, as additional transformers may be required.
- CF = Consult Factory.

Low Voltage ASD Options

Common Installed ASD Options

Part number	Description	Price
PA	Pilot Light for ASD Mode Indicator	$300
PB	Pilot Light for Bypass Mode Indicator	$300
PF	Pilot Light for Fault Indicator (Amber)	$300
PG	Pilot Light for Stop Indicator (Green)	$300
PP	Pilot Light for Power on Indicator (White)	$300
PR	Pilot Light for Run Indicator (Red)	$300
PX	Pilot Light for Miscellaneous Indicator Specify at Time of Order	CF

Notes:

- For NEMA-rated devices, consult factory for pricing.
- The discrete outputs OUT1, OUT2, and FLA/B/C are used to activate the pilot lights.
- For more than three active indicators, consult factory for pricing and availability of additional required hardware.
- CF = Consult Factory.

Miscellaneous Options

Part Number	Description	Price
X2	Isolated 4 to 20 mA Transducer Connected to AM Terminal	$550
X3	Isolated 4 to 20 mA Transducer Connected to FM Terminal	$550
X5	Isolated 3 to 15 PSI Transducer Connected to VI Terminal	$680

Low Voltage ASD Options

Dynamic Braking Resistors

Dynamic braking resistors, also abbreviated as DBRs or PBRs (for power braking resistors), are typically designed to remove excess energy from a system in the form of heat. DBRs are normally connected in series with a chopper transistor labeled "IGBT7" across the DC bus which allows the resistor to bleed off excess voltage. Typical applications involving excess regeneration include decelerating high inertia loads and overhauling loads causing regenerative power.

Heavy duty resistors are rated at 125% braking torque and a maximum of 50% overhauling duty cycle or 100% decel rate on a two-minute period (ie. one minute on, one minute off for 50% overhauling cycle). Standard duty resistors are rated at 40% braking torque and a maximum of 20% overhauling duty cycle or 40% decel rate.

Heavy duty resistors are recommended for regenerative applications while standard duty resistors are only recommended for applications with nuisance overvoltages.
DBRs must only be used in conjunction with thermal protection properly rated for the resistor's capacity and an input contactor to open the input three-phase power to the ASD in the event that a DBR over-temperature condition occurs.

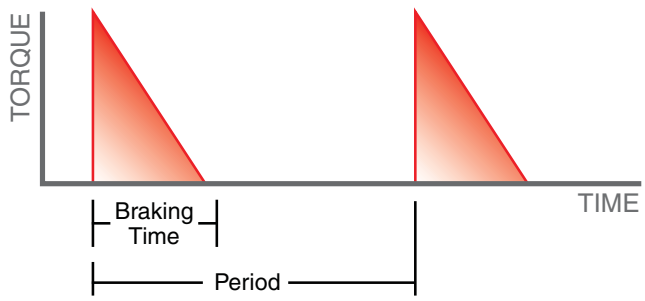

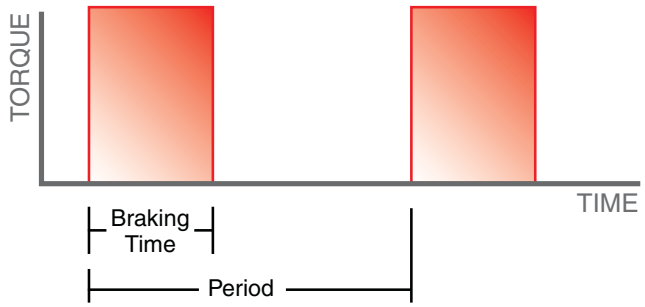

The DBR part numbering convention (BR-####-XXX*) is as follows:

BR — Braking Resistor
— Ohm Value with One Implied Decimal Place
XXX — Size in Watts
* — Watts Multiplier (0=Multiply by 1, K=Multiply 10, L=Multiply by 100, M=Multiply by 1,000)

Notes:

- Larger HP units have limited braking capacity.
- Dynamic braking parameters must be set correctly in order for DBRs to be used, failure to do so may result in damage to the drive or resistor. Parameter settings are typeform and application specific. Please see each ASD's respective Installation and Operations Manual for more information.
- Dynamic braking transistors are not standard with all ASDs.
- Dynamic braking options listed are not necessarily the same as the options listed in the AS3, AS1, S11, or S15 Installation and Operations Manual.
- All dynamic braking resistors come in a NEMA 1 enclosure.

Low Voltage ASD Options

Dynamic Braking Resistors

230 V Power Rating – Heavy Duty Dynamic Braking Resistors

HP	Model Number	H	W	D	List Price
		Dimensions (in.)			
0.75	BR-2000-3000	5	12	5	$190
1	BR-1500-3250	5	12	5	$195
2	BR-0760-6500	5	12	7	$300
3	BR-0510-120K	5	12	10	$400
5	BR-0300-160K	5	12	13	$485
7.5	BR-0198-240K	5	19	10	$660
10	BR-0155-349K	5	19	10	$725
15	BR-0099-524K	5	26.5	10	$900
20	BR-0073-612K	5	26.5	13	$1,150
25	BR-0065-842K	5	26.5	16	$1,450
30	BR-0055-112L	10	28	10	$1,700
40	BR-0040-144L	10	28	13	$1,940
50	BR-0033-168L	10	28	16	$2,550
60	BR-0027-195L	10	28	16	$3,050
75	BR-0022-250L	24	30	18	$4,085
100	BR-0017-316L	24	30	18	$4,520
125	BR-0013-384L	32	30	18	$6,200

Notes:

- Dynamic braking resistors come with a normally-closed thermal switch and terminal block.

230 V Power Rating – Standard Duty Dynamic Braking Resistors

HP	Model Number	H	W	D	List Price
		Dimensions (in.)			
0.75	BR-6100-2500	5	12	5	$190
1	BR-4500-2500	5	12	5	$195
2	BR-2300-2500	5	12	5	$200
3	BR-1520-3250	5	12	5	$205
5	BR-0900-3500	5	12	5	$210
7.5	BR-0600-8000	5	12	7	$300
10	BR-0460-8000	5	12	7	$320
15	BR-0300-120K	5	12	10	$400
20	BR-0228-140K	5	12	13	$475
25	BR-0184-160K	5	12	13	$500
30	BR-0150-200K	5	12	16	$575
40	BR-0112-280K	5	19	13	$800
50	BR-0093-372K	5	19	10	$850
60	BR-0078-527K	5	26.5	10	$900
75	BR-0064-655K	5	26.5	13	$1,100
100	BR-0048-622K	5	26.5	13	$1,200
125	BR-0037-745K	5	26.5	13	$1,250

Notes:

- Dynamic braking resistors come with a normally-closed thermal switch and terminal block.

Low Voltage ASD Options

Dynamic Braking Resistors

460 V Power Rating – Heavy Duty Dynamic Braking Resistors

HP	Model Number	H	W	D	List Price
		Dimensions (in.)			
1	BR-6000-3500	5	12	5	$195
2	BR-3000-6500	5	12	7	$300
3	BR-2010-9750	5	12	10	$400
5	BR-1200-160K	5	12	13	$485
7.5	BR-0810-240K	5	19	10	$660
10	BR-0600-320K	5	19	13	$800
15	BR-0408-480K	5	26.5	13	$1,100
20	BR-0292-656K	5	26.5	13	$1,150
25	BR-0245-794K	5	26.5	16	$1,350
30	BR-0198-105L	10	28	10	$1,550
40	BR-0164-138L	10	28	16	$2,150
50	BR-0130-168L	10	28	16	$2,550
60	BR-0104-211L	16	30	18	$3,110
75	BR-0080-288L	24	30	18	$3,900
100	BR-0060-310L	32	30	18	$4,900
125	BR-0049-395L	32	30	18	$5,600
150	BR-0040-465L	40	30	18	$6,800
200	BR-0030-676L	48	30	18	$8,500
250	BR-0024-778L	48	30	18	$9,500
300	BR-0020-873L	48	30	18	$11,000
350	BR-0019-109M	2x40	2x30	2x18	$13,000
400	BR-0015-116M	2x40	2x30	2x18	$15,000
450	BR-0013-154M	2x56	2x30	2x18	$20,000
550	BR-0011-176M	2x56	2x30	2x18	$22,800
600	BR-0011-184M	2x56	2x30	2x18	$23,500
700	BR-0009-222M	3x56	3x30	3x18	$29,000

Notes:

- Dynamic braking resistors come with a normally-closed thermal switch and terminal block.
- Plus Packs 250 HP and above must use the 250 HP heavy duty dynamic braking resistor.
- Units 350 HP and above come as two separate components.

Low Voltage ASD Options

Dynamic Braking Resistors

460 V Power Rating – Standard Duty Dynamic Braking Resistors

HP	Model Number	H	W	D	List Price
		Dimensions (in.)			
1	BR-180K-2500	5	12	5	$195
2	BR-9250-2500	5	12	5	$200
3	BR-6100-2500	5	12	5	$205
5	BR-3600-3500	5	12	5	$210
7.5	BR-2400-8000	5	12	7	$300
10	BR-1800-7000	5	12	7	$320
15	BR-1200-105K	5	12	10	$400
20	BR-0920-160K	5	12	13	$475
25	BR-0720-160K	5	12	13	$500
30	BR-0600-200K	5	12	16	$575
40	BR-0455-280K	5	19	13	$700
50	BR-0368-320K	5	19	13	$800
60	BR-0310-400K	5	19	16	$950
75	BR-0240-480K	5	26.5	13	$1,100
100	BR-0196-635K	5	26.5	13	$1,150
125	BR-0153-807K	5	26.5	16	$1,300
150	BR-0127-107L	10	28	13	$1,775
200	BR-0091-118L	10	28	13	$1,950
250	BR-0074-149L	10	28	13	$2,250
300	BR-0064-230L	16	30	18	$2,950
350	BR-0051-262L	24	30	18	$4,000
400	BR-0046-291L	32	30	18	$4,650
450	BR-0042-302L	24	30	18	$4,850
550	BR-0034-336L	24	30	18	$5,300
600	BR-0032-461L	32	30	18	$5,900
700	BR-0026-517L	32	30	18	$6,500

Notes:

- Dynamic braking resistors come with a normally-closed thermal switch and terminal block.

Low Voltage ASD Options

Dynamic Braking Resistors

600/690 V Power Rating – Heavy Duty Dynamic Braking Resistors

HP	Model Price	H	W	D	List Price
		Dimensions (in.)			
2	BR-6500-7000	5	12	7	$300
3	BR-4350-9750	5	12	10	$400
5	BR-2600-160K	5	12	13	$485
7.5	BR-1740-240K	5	19	10	$660
10	BR-1280-320K	5	19	13	$800
15	BR-0864-480K	5	26.5	13	$1,000
20	BR-0656-640K	10	28	10	$1,300
25	BR-0520-800K	10	28	13	$1,600
30	BR-0437-984K	10	28	10	$1,800
40	BR-0344-138L	10	28	13	$2,000
50	BR-0260-176L	10	28	16	$2,300
60	BR-0206-174L	16	30	18	$2,800
75	BR-0166-215L	16	30	18	$3,400
100	BR-0133-332L	24	30	18	$4,800
125	BR-0102-417L	32	30	18	$5,900
150	BR-0087-453L	40	30	18	$6,800
200	BR-0064-640L	40	30	18	$8,500
250	BR-0052-749L	56	30	18	$9,500
300	BR-0043-956L	72	30	18	$13,000
350	BR-0037-107M	2x40	2x30	2x18	$15,500
400	BR-0032-128M	2x40	2x30	2x18	$17,000
450	BR-0029-126M	2x40	2x30	2x18	$19,000
550	BR-0024-188M	2x64	2x30	2x18	$22,500
700	BR-0018-233M	3x56	3x30	3x18	$26,500

Notes:
- Dynamic braking resistors come with a normally-closed thermal switch and terminal block.
- GX7/GX9 must use the 300 HP heavy duty dynamic braking resistor.
- Units 350 HP and above come as two separate components.

Low Voltage ASD Options
Dynamic Braking Resistors

600/690 V Power Rating – Standard Duty Dynamic Braking Resistors

HP	Model Number	H	W	D	List Price
		Dimensions (in.)			
2	BR-200K-2500	5	12	5	$200
3	BR-130K-2500	5	12	5	$205
5	BR-8000-3500	5	12	5	$210
7.5	BR-5200-5000	5	12	7	$300
10	BR-4000-7000	5	12	7	$320
15	BR-2700-105K	5	12	10	$400
20	BR-2000-140K	5	12	13	$475
25	BR-1600-160K	5	12	13	$500
30	BR-1300-200K	5	12	16	$575
40	BR-0980-280K	5	19	13	$750
50	BR-0784-320K	5	19	13	$800
60	BR-0650-400K	5	19	16	$950
75	BR-0528-480K	5	26.5	13	$1,100
100	BR-0400-640K	10	28	10	$1,440
125	BR-0310-794K	5	26.5	16	$1,300
150	BR-0264-140L	10	28	13	$1,800
200	BR-0208-141L	10	28	13	$2,000
250	BR-0160-164L	10	28	16	$2,500
300	BR-0126-202L	16	30	18	$3,200
350	BR-0117-237L	16	30	18	$3,600
400	BR-0102-255L	24	30	18	$4,000
450	BR-0088-317L	24	30	18	$4,250
550	BR-0073-356L	24	30	18	$4,900
700	BR-0055-448L	32	30	18	$6,000

Notes:
- Dynamic braking resistors come with a normally-closed thermal switch and terminal block.

Reactors & Filters

Line Reactors

Line reactors, also referred to as chokes, are passive-power conditioning devices. Reactors are most often applied to correct or prevent power-line problems inherent in ASD applications. When applied to the input of a drive, the line reactor is intended to protect the input of the drive from power-line problems or vice versa.

Applying line reactors is simple. There are two factors to consider when selecting the amperage and percent impedance for an application. For amperage, the line reactor must meet or exceed the current flow requirements of the application. The percent impedance indicates the expected voltage drop across the reactor at full load. For instance, if the input voltage is 480 VAC a 5% impedance line reactor is applied, a 13.86 volt drop [(480 x .05)/1.73] will occur with a resultant 466 VAC output.

Typical Applications

Input

- Reducing Reflected Harmonics to the Power-line
- High Ratios Between Point of Common Coupling (PCC) ASD's Power Capacity
- Example: A pad-mounted transformer has a capacity of 1000 kVA, the ASD has a capacity of 11 kVA (10 HP) for a ratio of 90:1 (stiff line). Toshiba suggests that a line reactor be used where the ratio is greater than 20:1

Nuisance trips due to line voltage spikes can be minimized, as the line reactor will reduce the magnitude duration of the transients.

Output

- Adding Inductance to a Low Impedance Motor
- Excessively Long Motor Lead-lengths Must Be Addressed with a Long Lead-length Filter

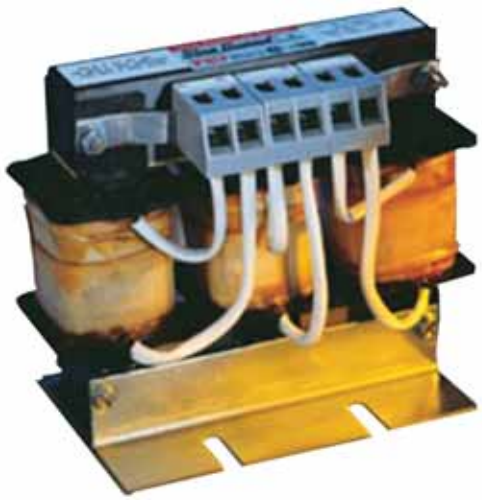

Reactors & Filters

Line Reactors

230 V, 3% Impedance in NEMA 1 Enclosure

Amps	HP	Model Number	H	W	D	Weight (lbs.)	List Price
			Dimensions (in.)				
4	0.75	101063	6.5	8.0	6.0	3	$265
6	1	101064	6.5	8.0	6.0	3	$280
8	2	101065	6.5	8.0	6.0	3	$285
12	3	101066	6.5	8.0	6.0	3	$300
16	5	101067	6.5	8.0	6.0	7	$375
25	7.5	101070	7.5	10.0	7.0	8	$420
35	10	101072	7.5	10.0	7.0	8	$460
55	15	101074	7.5	10.0	7.0	11	$510
80	20	101075	9.0	12.0	8.0	22	$680
110	40	101076	15.5	15.0	13.0	26	$880
130	50	101077	15.5	15.0	13.0	33	$1,090
160	60	101078	15.5	15.0	13.0	47	$1,265

230 V, 6% Impedance in NEMA 1 Enclosure

Amps	HP	Model Number	H	W	D	Weight (lbs.)	List Price
			Dimensions (in.)				
3	0.75	PC34093P001	6.5	8.0	6.0	3	$265
6	1	PC34093P003	6.5	8.0	6.0	3	$300
8	2	PC34093P005	6.5	8.0	6.0	3	$300
12	3	PC34093P007	6.5	8.0	6.0	6	$310
16	5	PC34093P010	6.5	8.0	6.0	7	$365
25	7.5	PC34093P015	7.5	10.0	7.0	11	$465
35	10	PC34093P025	7.5	10.0	7.0	14	$495
55	15	PC34093P040	9.0	12.0	8.0	22	$660
80	20	PC34093P060	15.5	15.0	13.0	26	$880
110	40	PC34093P075	15.5	15.0	13.0	33	$1,100
130	50	PC34093P100	15.5	15.0	13.0	47	$1,180
160	60	PC34093P125	15.5	15.0	13.0	50	$1,375

Reactors & Filters

Line Reactors

230 V, 3% Impedance Open Style

Amps	HP	Model Number	H	W	D	Weight (lbs.)	List Price
			Dimensions (in.)				
4	0.75	PC34094P000	4.0	5.0	4.0	3	$160
6	1	PC34094P001	4.0	5.0	4.0	3	$165
8	2	PC34094P002	4.0	5.0	4.0	3	$175
12	3	PC34094P003	4.0	5.0	4.0	3	$195
16	5	PC34094P005	5.0	6.0	4.0	7	$275
25	7.5	PC34094P007	6.0	7.0	4.0	8	$290
35	10	PC34094P010	6.0	7.0	4.0	8	$300
55	15	PC34094P020	5.8	8.0	5.0	11	$350
80	20	PC34094P030	7.0	9.0	6.0	22	$465
110	40	PC34094P040	7.0	10.0	7.0	26	$655
130	50	PC34094P050	9.0	11.0	7.0	33	$725
160	60	PC34094P060	9.0	11.0	7.0	47	$905

230 V, 6% Impedance Open Style

Amps	HP	Model Number	H	W	D	Weight (lbs.)	List Price
			Dimensions (in.)				
3	0.75	PC34095P001	4.0	4.3	3.0	3	$220
6	1	PC34095P003	4.0	4.3	3.0	3	$260
8	2	PC34095P005	4.0	5.0	4.0	3	$260
12	3	PC34095P007	5.0	7.0	5.0	6	$280
16	5	PC34095P010	5.0	6.0	4.0	7	$310
25	7.5	PC34095P015	5.8	8.0	5.0	11	$325
35	10	PC34095P025	5.8	8.0	5.0	14	$350
55	15	PC34095P040	7.0	9.0	6.0	22	$500
80	20	PC34095P060	9.0	11.0	6.0	31	$600
110	40	PC34095P075	9.0	11.0	7.0	39	$800
130	50	PC34095P100	9.0	11.0	8.0	48	$900
160	60	PC34095P125	9.0	11.0	8.0	50	$1,100

Reactors & Filters

Line Reactors

460 V, 3% Impedance in A NEMA 1 Enclosure

Amps	HP	Model Number	H	W	D	Weight (lbs.)	List Price
			Dimensions (in.)				
3	1	PC34093P001	6.5	8.0	6.0	3	$265
4	2	PC34093P002	6.5	8.0	6.0	3	$265
6	3	PC34093P003	6.5	8.0	6.0	3	$300
12	7.5	PC34093P007	6.5	8.0	6.0	6	$310
16	10	PC34093P010	6.5	8.0	6.0	7	$365
18	10	101051	7.5	10.0	7.0	11	$420
25	15	PC34093P015	7.5	10.0	7.0	11	$465
35	20 to 25	PC34093P025	7.5	10.0	7.0	14	$495
45	30	PC34093P030	7.5	10.0	7.0	14	$550
55	40	PC34093P040	9.0	12.0	8.0	22	$660
80	50	PC34093P060	15.5	15.0	13.0	31	$880
110	60	PC34093P075	15.5	15.0	13.0	39	$1,100
130	75	PC34093P100	15.5	15.0	13.0	48	$1,180
160	100	PC34093P125	15.5	15.0	13.0	50	$1,375
200	125	PC34093P150	18.5	20.0	16.0	86	$1,585
250	150	PC34093P200	18.5	20.0	16.0	91	$1,905
300	200	101054	18.5	20.0	16.0	101	$2,090
360	250	PC34093P250	18.5	20.0	16.0	90	$2,200
420	300	PC34093P300	18.5	20.0	16.0	100	$2,365
480	350	PC34093P400	18.5	20.0	16.0	115	$2,575
600	400	PC34093P500	18.5	20.0	16.0	151	$3,080
750	500	101055	36.0	28.5	30.3	283	$4,840
850	700	101056	36.0	28.5	30.3	290	$5,280
950	800	101057	36.0	28.5	30.3	295	$5,830

Reactors & Filters

Line Reactors

460 V, 3% Impedance Open Style

Amps	HP	Model Number	H	W	D	Weight (lbs.)	List Price
			Dimensions (in.)				
3	1	PC34095P001	4.0	4.3	3.0	3	$220
4	2	PC34095P002	4.0	4.3	3.0	3	$220
6	3	PC34095P003	4.0	4.3	3.0	3	$260
8	5	PC34095P005	4.0	5.0	4.0	3	$260
12	7.5	PC34095P007	5.0	7.0	5.0	6	$280
16	10	PC34095P010	5.8	6.0	4.0	7	$310
25	15	PC34095P015	5.8	8.0	5.0	11	$325
35	20 to 25	PC34095P025	5.8	8.0	5.0	14	$350
45	30	PC34095P030	5.8	8.0	5.0	14	$450
55	40	PC34095P040	7.0	9.0	6.0	22	$500
80	50	PC34095P060	9.0	11.0	6.0	31	$600
110	60	PC34095P075	9.0	11.0	7.0	39	$800
130	75	PC34095P100	9.0	11.0	8.0	48	$900
160	100	PC34095P125	9.0	11.0	8.0	50	$1,100
200	125	PC34095P150	11.4	14.0	8.0	86	$1,200
250	150	PC34095P200	11.4	14.0	8.0	91	$1,600
300	200	PC34095P240	11.4	14.0	8.0	101	$1,800
360	250	PC34095P250	11.4	14.0	8.0	98	$1,900
420	300	PC34095P300	11.4	14.0	8.0	100	$2,000
480	350	PC34095P400	11.4	15.0	11.0	115	$2,300
600	400	PC34095P500	11.4	15.0	13.0	151	$2,750
750	500	CF	17.3	16.9	10.3	283	$4,200
850	700	CF	17.3	16.9	10.3	290	$4,700
950	800	CF	17.3	16.9	10.3	295	$5,300

CF: Consult Factory.

Reactors & Filters

Line Reactors

460 V, 5% Impedance in NEMA 1 Enclosure

Amps	HP	Model Number	H	W	D	Weight (lbs.)	List Price
			Dimensions (in.)				
3	1	PC34096P001A	6.5	8.0	6.0	3	$270
4	2	PC34096P002	6.5	8.0	6.0	3	$270
6	3	PC34096P003	6.5	8.0	6.0	6	$330
12	7.5	PC34096P008	6.5	8.0	6.0	6	$375
16	10	PC34096P010	7.5	10.0	7.0	12	$495
18	10	101058	7.5	10.0	7.0	12	$505
25	15	PC34096P015	7.5	10.0	7.0	14	$515
35	20 to 25	PC34096P025	9.0	12.0	8.0	22	$685
45	30	PC34096P030	9.0	12.0	8.0	24	$750
55	40	PC34096P040	15.5	15.0	13.0	48	$1,130
80	50	PC34096P050	15.5	15.0	13.0	48	$1,130
110	60	PC34096P075	15.5	15.0	13.0	50	$1,265
130	75	PC34096P100	18.5	20.0	16.0	81	$1,485
160	100	PC34096P125	18.5	20.0	16.0	84	$1,650
200	125	PC34096P150	18.5	20.0	16.0	110	$1,870
250	150	PC34096P200	18.5	20.0	16.0	91	$2,380
300	200	PC34096P250	18.5	20.0	16.0	122	$2,555
360	250	PC34096P300	18.5	20.0	16.0	156	$2,750
420	300	101144	18.5	20.0	16.0	160	$3,080
480	350	PC34096P400	18.5	20.0	16.0	175	$3,740
600	400	101048	36.0	28.5	30.3	275	$4,425
750	500	PR00098P22	36.0	28.5	30.3	295	$5,325
850	700	101049	36.0	28.5	30.3	300	$5,900
950	800	101145	36.0	28.5	30.3	300	$6,700

Reactors & Filters

Line Reactors

460 V, 5% Impedance Open Style

Amps	HP	Model Number	H	W	D	Weight (lbs.)	List Price
			Dimensions (in.)				
3	1	PC34097P001A	4.0	5.0	4.0	3	$240
4	2	PC34097P002	4.0	5.0	4.0	4	$240
6	3	PC34097P003	5.0	7.0	5.0	6	$290
8	5	PC34097P005	5.0	7.0	5.0	6	$290
12	7.5	PC34097P008	5.0	7.0	5.0	6	$330
16	10	PC34097P010	5.8	8.0	5.0	12	$375
25	15	PC34097P015	5.8	8.0	5.0	14	$385
35	20 to 25	PC34097P025	7.0	9.0	6.0	22	$520
45	30	PC34097P030	7.0	9.0	6.0	24	$590
55	40	PC34097P040	9.0	11.0	6.0	32	$625
80	50	PC34097P060	9.0	11.0	7.0	48	$850
110	60	PC34097P075	11.4	15.0	8.0	50	$1,000
130	75	PC34097P100	11.4	15.0	8.0	81	$1,200
160	100	PC34097P125	11.4	15.0	8.0	84	$1,350
200	125	PC34097P150	11.4	15.0	8.0	110	$1,650
250	150	PC34097P200	11.4	15.0	10.0	115	$2,200
300	200	PC34097P250	11.4	15.0	11.0	122	$2,350
360	250	PC34097P300	11.4	15.0	11.0	156	$2,500
420	300	CF	11.4	15.0	13.0	160	$2,700
480	350	PC34097P400	11.4	15.0	13.0	175	$3,500
600	400	PC34097P450	17,3	16.9	10.3	275	$3,750
750	500	PC34097P500	17,3	16.9	10.3	295	$4,300
850	700	PC3497P700	17,3	16.9	10.3	300	$5,325
950	800	CF	17,3	16.9	10.3	305	$6,000

CF: Consult Factory.

Reactors & Filters

Line Reactors

575 V, 3% Impedance in NEMA 1 Enclosure

Amps	HP	Model Number	H	W	D	Weight (lbs.)	List Price
			Dimensions (in.)				
8	5	101115	6.5	8.0	6.0	7	$265
12	10	101116	6.5	8.0	6.0	7	$290
18	15	101118	7.5	10.0	7.0	12	$410
25	20	101120	7.5	10.0	7.0	12	$420
27	25	101121	7.5	10.0	7.0	12	$440
35	30	101122	7.5	10.0	7.0	16	$465
45	40	101123	9.0	12.0	8.0	26	$530
55	50	101124	9.0	12.0	8.0	24	$565
80	60	101125	15.5	15.0	13.0	49	$825
80	75	101125	15.5	15.0	13.0	49	$825
110	100	101126	15.5	15.0	13.0	49	$1,102
130	125	101127	15.5	15.0	13.0	47	$1,190
160	150	101128	15.5	15.0	13.0	47	$1,265
200	200	101129	18.5	20.0	16.0	86	$1,375
250	250	101130	18.5	20.0	16.0	91	$1,510

Reactors & Filters

Line Reactors

575 V, 5% Impedance in NEMA 1 Enclosure

Amps	HP	Model Number	H	W	D	Weight (lbs.)	List Price
			Dimensions (in.)				
8	5	101094	6.5	8.0	6.0	7	$345
12	10	101095	7.5	10.0	7.0	8	$375
18	15	101097	7.5	10.0	7.0	12	$495
25	20	101099	9.0	12.0	8.0	17	$510
27	25	101100	9.0	12.0	8.0	17	$540
35	30	101101	9.0	12.0	8.0	23	$620
45	40	101102	15.5	15.0	13.0	26	$690
55	50	101103	15.5	15.0	13.0	33	$915
80	60	101104	15.5	15.0	13.0	49	$1,130
80	75	101104	15.5	15.0	13.0	49	$1,130
110	100	101105	18.5	20.0	16.0	53	$1,265
130	125	101106	18.5	20.0	16.0	88	$1,485
160	150	101107	18.5	20.0	16.0	95	$1,620
200	200	101108	18.5	20.0	16.0	110	$1,870
250	250	101109	18.5	20.0	16.0	115	$2,380
300	300	101110	18.5	20.0	16.0		$2,560

Reactors & Filters

Line Reactors

575 V, 3% Impedance Open Style

Amps	HP	Model Number	H	W	D	Weight (lbs.)	List Price
			Dimensions (in.)				
8	5	Consult Factory					$265
12	10						$290
18	15						$410
25	20						$420
27	25						$440
35	30						$465
45	40						$530
55	50						$565
80	60						$825
80	75						$825
110	100						$1,102
130	125						$1,090
160	150						$1,265
200	200						$1,375
250	250						$1,510

575 V, 5% Impedance Open Style

Amps	HP	Model Number	H	W	D	Weight (lbs.)	List Price
			Dimensions (in.)				
8	5	Consult Factory					$345
12	10						$375
18	15						$495
25	20						$510
27	25						$540
35	30						$620
45	40						$690
55	50						$915
80	60						$1,130
80	75						$1,130
110	100						$1,265
130	125						$1,485
160	150						$1,620
200	200						$1,870
250	250						$2,380

Reactors & Filters

Line Reactors

Installed AC Line Reactors

Option Code	230 V Power Rating	460 V Power Rating	3% Impedance List Price	5% Impedance List Price
R3/R5	-	1 HP	$360	$385
	0.75-1 HP	2 HP	$385	$440
	-	3 HP	$415	$495
	2 HP	5 HP	$440	$550
	3 HP	7.5 HP	$550	$660
	5 HP	10 HP	$605	$715
	7.5 HP	15 HP	$660	$825
	10 HP	20 HP	$715	$935
	-	25 HP	$770	$990
	15 HP	30 HP	$825	$1,045
	20 HP	40 HP	$880	$1,250
	25 HP	50 HP	$1,100	$1,320
	30 HP	60 HP	$1,375	$1,650
	40 HP	75 HP	$1,485	$1,760
	50 HP	100 HP	$1,650	$1,925
	60 HP	125 HP	$1,925	$2,200
	75 HP	150 HP	$2,200	$2,750
	100 HP	200 HP	$2,750	$3,025
	125 HP	250 HP	$3,000	$3,575
	-	300 HP	$3,300	$3,850
	-	350 HP	$3,800	$4,950
	-	400 HP	$4,000	$5,500
	-	500 HP	$6,000	$6,500
	-	600 HP	$7,000	$7,500
	-	700 HP	$8,000	$9,000
	-	800 HP	$9,000	$10,000
	-	900 HP	$12,000	$13,500
	-	1000 HP	$13,200	$14,500
	-	1200 HP	$14,400	$16,000
	-	1400 HP	$16,800	$18,500
	-	1500 HP	$19,200	$21,500

Reactors & Filters

Long Lead Filters

Long lead filters are designed for applications with long motor leads between IGBT-switched adjustable speed drives. Typical installations include deep wells, process lines, conveyor systems. Refer to the Operating Maintenance Manual for guidelines.

Long lead filters are current-rated devices. Therefore, know the total motor load on the ASD for proper application. They are to be wired directly to the drive installed adjacent to the output terminals. Installing the filters anywhere else in the circuit will negatively affect performance.

For 230 V applications, refer to the FLA rating or double the HP for proper sizing. For instance, a 20 HP/230 V application would require a 40 HP/460 V long lead filter. Refer to your operation manual for instructions on how to change the carrier frequency and carrier frequency limitations.

460 V for Motor Lead-Lengths up to 3000 ft. 8 kHz Maximum Carrier Frequency in a NEMA 1 Enclosure

FLA	HP	Model Number	H	W	D	Weight (lbs.)	List Price
			Dimensions (in.)				
4	1 to 2	PR00100P22	6.5	8.0	6.0	8	$840
6	3	PR00101P22	6.5	8.0	6.0	8	$865
8	5	PR00102P22	6.5	8.0	6.0	8	$890
12	7.5	PR00103P22	6.5	8.0	6.0	8	$915
16	10	PR00104P22	6.5	8.0	6.0	11	$940
25	15	PR00105P22	7.5	10.0	7.0	16	$1,000
35	20 to 25	PR00106P22	7.5	10.0	7.0	17	$1,030
45	30	PR00107P22	7.5	10.0	7.0	17	$1,055
55	40	PR00108P22	9.0	12.0	8.0	18	$1,155
80	50 to 60	PR00109P22	9.0	12.0	8.0	31	$1,485
110	75	PR00110P22	16	15.0	13.0	58	$2,025
130	100	PR00111P22	16	15.0	13.0	58	$2,215
160	125	PR00112P22	16	15.0	13.0	70	$2,470
200	150	PR00113P22	16	15.0	13.0	74	$2,565
250	200	PR00114P22	16	15.0	13.0	82	$2,595
300	250	PR00115P22	19	20.0	16.0	106	$2,785
360	300	PR00116P22	19	20.0	16.0	117	$3,095
480	350 to 400	PR00117P22	19	20.0	16.0	142	$4,150
600	450	PR00118P22	19	20.0	16.0	148	$4,600
750	500	CF	13	15	15	325	$10,500

Notes:
- Consult factory for installed pricing.
- CF: Consult Factory.

Medium Voltage Drives
T300MV2® ASD
Specifications

The T300MV2® medium voltage adjustable speed drive is the most advanced drive in the industry. No other drive in the market features the latest multi-level Pulse Width Modulation (PWM) with Neutral-Point Clamping (NPC) technology. This advanced technology allows for a smaller footprint, a reduced component count, and ultimately, a lower cost. In addition, it incorporates the latest safety technology, making it one of the safest designs on the market.

Product Scope

2400 V at 300 to 3000 HP
3300 V at 300 to 8000 HP
4160 V at 300 to 11,000 HP
6600 V at 300 to 9000 HP

Highlights

- Three Cables In, Three Cables Out
- 24-Pulse Harmonic Cancellation Complies with IEEE-519 2014
- Higher True Factor (>0.96) than Running Motors Across-the-Line
- Small Footprint Through Compact Power Modules, Standard Copper-Wound Isolation Transformer, & Air-Cooling System
- Robust, High-Quality Medium Voltage IGBT Technology, Transistors, & Control Components
- Advanced Electronics to Reduce Component Count
- Additive Multi-Level PWM Output Voltage with No Neutral Shift

Standard Features

- Overload Rating, 115% for 60 Seconds (Some Ratings with 110% Overload)
- NEMA 1 Ventilated Enclosure with Gasket & Air Intake Filters with IP20 Degree of Protection
- Ten Digital Inputs: Interposing Relay may be Required
- Ten Digital Outputs: Interposing Relay may be Required
- Three Analog Inputs: Isolation Transducer Required
- Eight Analog Outputs: Isolation Transducer Required
- Medium Voltage IGBT Technology
- EOI: Plain-English LCD Display
- Ambient Temperature: 32° to 104° F (0° to 40°C)
- Altitude: Up to 1000 Meters without De-rate
- Humidity: 95% Non-Condensing
- Motor Cable Length 1000 ft. Without Additional Filter
- Standards & Compliances: NEC, NEMA, UL Listed in US & Canada, ANSI

T300MV2® ASD - NEMA 1

Part Numbering Convention

The T300MV2® can be configured with commonly-used options for an easy-to-install, turn-key package. See the chart below for available configurations. Custom packages are available upon request. Drawings supplied by Toshiba's MV Drives Department.

The example, M4AAN44050AAA0, shows a standard duty T300MV2, Frame A, 60Hz, non-regen, 4160 V input, 4160 V output, 500 HP, input disconnect, cooling fan power, standard output reactor, no main input bus.

Example Part Number:	M4	A	A	N	4	4	050	A	A	A	0	xx

Series:
M4 - MV2

Frame Type:
0 - Frame 0
1 - Frame 1
2 - Frame 2
3 - Frame 3
4 - Frame 4
A - Frame A
B - Frame B
C - Frame C
D - Frame D
E - Frame E
F - Frame F
G - Frame G
H - Frame H

Input Frequency:
A - 60 Hz
B - 50 Hz

Type:
N - For Non-Regen Drives
R - Regen Module Drives

Input Voltage:
2 - 2400
3 - 3300
4 - 4160
5 - 4800
6 - 6600
7 - 6900
A - 7200
B - 8320
C - 10000
D - 11000
E - 12000
F - 12470
G - 13200
H - 13800
Z - Other

Output Voltage:
2 - 2400
3 - 3300
4 - 4160
6 - 6600

Output Rated Capacity:

030 - 300 HP	070 - 700 HP	175 - 1750 HP	400 - 4000 HP	800 - 8000 HP
035 - 350 HP	080 - 800 HP	200 - 2000 HP	450 - 4500 HP	900 - 9000 HP
040 - 400 HP	090 - 900 HP	225 - 2250 HP	500 - 5000 HP	10K - 10000 HP
045 - 450 HP	100 - 1000 HP	250 - 2500 HP	550 - 5500 HP	11K - 11000 HP
050 - 500 HP	125 - 1250 HP	300 - 3000 HP	600 - 6000 HP	
060 - 600 HP	150 - 1500 HP	350 - 3500 HP	700 - 7000 HP	

Configuration:

	ID:	CP:	BYP:	RFAN:
A --	Yes	Yes	No	No
B --	Yes	No	No	No
C --	No	Yes	No	No
D --	No	No	No	No
E --	Yes	Yes	Yes	No
F --	Yes	No	Yes	No
G --	No	Yes	Yes	No
H --	No	No	Yes	No
J --	Yes	Yes	No	Yes
K --	Yes	No	No	Yes
L --	No	Yes	No	Yes
M --	No	No	No	Yes
N--	Yes	Yes	Yes	Yes
P --	Yes	No	Yes	Yes
Q --	No	Yes	Yes	Yes
R --	No	No	Yes	Yes

ID - Input Disconnect
CP - Internal Cooling Fan Power
BYP - Bypass
RFAN - Redundant Fans

Output Options:
A - Standard Reactor
B - DV/DT Filter
C - DV/DT Filter and Transfer
D - Transfer
E - Sinewave Filter
F - Sinewave Filter and Transfer

Cooling Options:
A - Standard
B - Bottom Air Feed
C - Heat Exchanger Cooled
D - Outdoor Converter

Main Input Bus:
0 - None
1 - 1200 A Uninsulated
2 - 1200 A Insulated
3 - 2000 A Uninsulated
4 - 2000 A Insulated

Additional Options:
Additional numbers or letters that may be used to designate other options or identify individual units in multiple unit orders

T300MV2® ASD

T300MV2® - 2400 VAC Output
Pricing & Dimensions

HP	FLA	Model Number	Frame	H	W	D	List Price	Estimated Shipping Weight (lbs.)
				Dimensions (in.)				
Without Bypass								
300	64	M4AAN22030AAA0	A2	103.7	48	48	$272,288	3700
350	75	M4AAN22035AAA0	A2	103.7	48	48	$274,599	3900
400	86	M4AAN22040AAA0	A2	103.7	48	48	$278,100	4100
450	97	M4AAN22045AAA0	A2	103.7	48	48	$279,994	4300
500	107	M4AAN22050AAA0	A2	103.7	48	48	$285,645	4500
600	129	M4BAN22060AAA0	B2	103.7	74	42	$288,400	7400
700	150	M4BAN22070AAA0	B2	103.7	74	42	$299,250	7700
800	172	M4BAN22080AAA0	B2	103.7	74	42	$301,600	8000
900	193	M4BAN22090AAA0	B2	103.7	74	42	$305,395	8300
1000	215	M4BAN22100AAA0	B2	103.7	74	42	$311,575	8600
1250	269	M4DAN22125AAA0	D2	103.7	122	42	$370,260	11300
1500	322	M4DAN22150AAA0	D2	103.7	122	42	$382,500	11800
1750	376	M4DAN22175AAA0	D2	103.7	122	42	$390,150	12200
2000	430	M4DAN22200AAA0	D2	103.7	122	42	$448,800	12800
2250	483	M44AN22225AAA0	4	103.7	222	48	$643,620	33000
2500	537	M44AN22250AAA0	4	103.7	222	48	$654,840	33000
3000	645	M44AN22300AAA0	4	103.7	222	48	$666,994	33000
With Manual Bypass								
300	64	M4AAN22030EAA0	A2	103.7	78	48	$319,988	4800
350	75	M4AAN22035EAA0	A2	103.7	78	48	$322,299	5000
400	86	M4AAN22040EAA0	A2	103.7	78	48	$325,800	5200
450	97	M4AAN22045EAA0	A2	103.7	78	48	$327,694	5400
500	107	M4AAN22050EAA0	A2	103.7	78	48	$333,345	5600
600	129	M4BAN22060EAA0	B2	103.7	104	42	$336,100	8500
700	150	M4BAN22070EAA0	B2	103.7	104	42	$346,950	8800
800	172	M4BAN22080EAA0	B2	103.7	104	42	$349,300	9100
900	193	M4BAN22090EAA0	B2	103.7	104	42	$353,095	9400
1000	215	M4BAN22100EAA0	B2	103.7	104	42	$359,275	9700
1250	269	M4DAN22125EAA0	D2	103.7	152	42	$421,140	12400
1500	322	M4DAN22150EAA0	D2	103.7	158	42	$433,380	12900
1750	376	M4DAN22175EAA0	D2	103.7	188	42	$463,290	14700
2000	430	M4DAN22200EAA0	D2	103.7	188	42	$521,940	15300
2250	483	M44AN22225EAA0	4	103.7	258	48	$727,360	35800
2500	537	M44AN22250EAA0	4	103.7	258	48	$738,580	35800
3000	645	M44AN22300EAA0	4	103.7	258	48	$750,734	35800

Notes:
- HP ratings above are for typical 4-pole motors.
- Dimensions do not include space required for clearance for airflow, door operation, etc.
- Bypass Starter pricing is based on fixed contactors (non draw-out type). Please select required Motor Protection relay option.
- Frames B2, and D2 drives with redundant fan option will increase in height by 7" over the standard model.
- Frame 4 3000 HP: consult factory for update on UL status.
- Weights and dimensions are subject to change.
- Units with bypass start the motor across the line for "emergency maintenance bypass" use when the VFD is out of service. Toshiba Standard RX5 simple overload relay is included in bypass at no additional cost. RTD monitoring not included.
- AAA are Standard models; -EAA include Bypass.

T300MV2® ASD

T300MV2® - 3300 VAC Output
Pricing & Dimensions

HP	FLA	Model Number	Frame	H	W	D	List Price	Estimated Shipping Weight (lbs.)
				Dimensions (in.)				
Without Bypass								
300	47	M4AAN33030AAA0	A4µ	103.7	48	48	$337,480	6000
400	63	M4AAN33040AAA0	A4µ	103.7	48	48	$341,550	6000
500	78	M4AAN33050AAA0	A4	103.7	60	48	$345,565	7600
600	94	M4AAN33060AAA0	A4	103.7	60	48	$348,180	7600
700	109	M4AAN33070AAA0	A4	103.7	60	48	$351,020	7600
800	125	M4BAN33080AAA0	B4	103.7	90	48	$406,980	9200
900	141	M4BAN33090AAA0	B4	103.7	90	48	$412,335	9200
1000	156	M4BAN33100AAA0	B4	103.7	90	48	$440,181	9800
1250	195	M4BAN33125AAA0	B4	103.7	90	48	$443,394	10600
1500	234	M4BAN33150AAA0	B4	103.7	90	48	$453,033	11500
1750	273	M42AN33175AAA0	2	103.7	164	48	$587,421	16400
2000	310	M42AN33200AAA0	2	103.7	164	48	$595,723	17200
2250	352	M42AN33225AAA0	2	103.7	164	48	$684,978	18100
2500	391	M43AN33250AAA0	3	103.7	174	48	$731,340	20000
3000	469	M43AN33300AAA0	3	103.7	174	48	$829,260	20800
3500	547	M44AN33350AAA0	4	103.7	222	48	$912,900	26000
4000	625	M44AN33400AAA0	4	103.7	222	48	$945,540	27100
4500	703	M44AN33450AAA0	4	103.7	222	48	$966,960	29100
5000	780	M4GAN33500AAA0	G4P	103.7	307.5	60	$1,346,400	38750
5500	858	M4GAN33550AAA0	G4P	103.7	307.5	60	$1,413,720	44500
6000	936	M4GAN33600AAA0	G4P	103.7	402.5	60	$1,650,000	40750
7000	1092	M4HAN33700AAA0	H4P	103.7	402.5	60	$1,927,800	64300
8000	1240	M4HAN33800AAA0	H4P	103.7	402.5	60	$1,968,600	68300
With Manual Bypass								
300	47	M4AAN33030EAA0	A4µ	103.7	78	48	$384,730	7100
400	63	M4AAN33040EAA0	A4µ	103.7	78	48	$388,800	7100
500	78	M4AAN33050EAA0	A4	103.7	90	48	$394,565	8700
600	94	M4AAN33060EAA0	A4	103.7	90	48	$397,767	8700
700	109	M4AAN33070EAA0	A4	103.7	90	48	$400,070	8700
800	125	M4BAN33080EAA0	B4	103.7	120	48	$457,860	10300
900	141	M4BAN33090EAA0	B4	103.7	120	48	$463,215	10300
1000	156	M4BAN33100EAA0	B4	103.7	120	48	$491,061	10900
1250	195	M4BAN33125EAA0	B4	103.7	120	48	$494,274	11700
1500	234	M4BAN33150EAA0	B4	103.7	120	48	$503,913	12600
1750	273	M42AN33175EAA0	2	103.7	194	48	$638,301	17500
2000	310	M42AN33200EAA0	2	103.7	194	48	$646,603	18300
2250	352	M42AN33225EAA0	2	103.7	194	48	$748,578	19200
2500	391	M43AN33250EAA0	3	103.7	210	48	$794,940	22000
3000	469	M43AN33300EAA0	3	103.7	210	48	$903,460	22800
3500	547	M44AN33350EAA0	4	103.7	258	48	$987,100	28000
4000	625	M44AN33400EAA0	4	103.7	258	48	$1,019,740	29100
4500	703	M44AN33450EAA0	4	103.7	258	48	$1,041,160	31100

Notes:
- HP ratings above are for typical 4-pole motors.
- Dimensions do not include space required or clearance for airflow, door operation, etc.
- Bypass Starter pricing is based on fixed contactors (not rack-out type). Please select required Motor Protection relay option.
- Weights and dimensions are subject to change.
- Frame H4P — consult factory for update on UL status.
- Units with bypass start the motor across the line for "emergency maintenance bypass" use when the VFD is out of service. Toshiba Standard RX5 simple overload relay is included in bypass at no additional cost. RTD monitoring not included.
- AAA are Standard models; -EAA include Bypass.

T300MV2® ASD

T300MV2® - 4160 VAC Output
Pricing & Dimensions

HP	FLA	Model Number	Frame	H	W	D	List Price	Estimated Shipping Weight (lbs.)
				Dimensions (in.)				
Without Bypass								
300	37	M4AAN44030AAA0	A4µ	103.7	48	48	$331,677	5200
400	50	M4AAN44040AAA0	A4µ	103.7	48	48	$337,480	5600
500	62	M4AAN44050AAA0	A4µ	103.7	48	48	$341,550	6000
600	74	M4AAN44060AAA0	A4µ	103.7	48	48	$345,565	6200
700	87	M4AAN44070AAA0	A4	103.7	60	48	$346,658	7000
800	99	M4AAN44080AAA0	A4	103.7	60	48	$348,717	7200
900	112	M4AAN44090AAA0	A4	103.7	60	48	$351,020	7400
1000*	124	M4AAN44100AAA0	A4	103.7	60	48	$353,010	7600
1000	124	M4BAN44100AAA0	B4	103.7	90	48	$406,980	9100
1250	155	M4BAN44125AAA0	B4	103.7	90	48	$416,378	9200
1500	186	M4BAN44150AAA0	B4	103.7	90	48	$440,181	10000
1750	217	M4BAN44175AAA0	B4	103.7	90	48	$443,394	10900
2000*	248	M4BAN44200AAA0	B4	103.7	90	48	$455,254	11500
300	37	M40AN44030AAA0	0	103.7	74	42	$293,716	5500
400	50	M40AN44040AAA0	0	103.7	74	42	$305,817	6000
500	62	M40AN44050AAA0	0	103.7	74	42	$310,592	6400
600	74	M40AN44060AAA0	0	103.7	74	42	$316,044	6600
700	87	M40AN44070AAA0	0	103.7	74	42	$318,383	6800
800	99	M40AN44080AAA0	0	103.7	74	42	$321,300	7200
900	112	M40AN44090AAA0	0	103.7	74	42	$331,075	7500
1000*	124	M40AN44100AAA0	0	103.7	74	42	$334,560	8300
1000	124	M41AN44100AAA0	1	103.7	122	42	$393,323	9500
1250	155	M41AN44125AAA0	1	103.7	122	42	$398,498	10200
1500	186	M41AN44150AAA0	1	103.7	122	42	$425,410	11000
1750	217	M41AN44175AAA0	1	103.7	122	42	$428,515	11900
2000*	248	M41AN44200AAA0	1	103.7	122	42	$437,830	12500
2250	279	M42AN44225AAA0	2	103.7	164	48	$587,421	15700
2500	310	M42AN44250AAA0	2	103.7	164	48	$595,723	16500
3000*	372	M42AN44300AAA0	2	103.7	164	48	$684,978	17300
3000	372	M43AN44300AAA0	3	103.7	174	48	$721,140	18200
3500	434	M43AN44350AAA0	3	103.7	174	48	$731,340	19000
4000*	496	M43AN44400AAA0	3	103.7	174	48	$829,260	19800
4000	496	M44AN44400AAA0	4	103.7	222	48	$897,600	23700
4500	558	M44AN44450AAA0	4	103.7	222	48	$912,900	24700
5000	620	M44AN44500AAA0	4	103.7	222	48	$930,240	25750
5500	682	M44AN44550AAA0	4	103.7	222	48	$947,394	26700
6000*	720	M44AN44600AAA0	4	103.7	222	48	$966,960	27750
6000*	744	M44AN44600AAA0	4	103.7	222	48	$966,960	27750
7000	868	M4GAN44700AAA0	G4P	103.7	307.5	60	$1,346,400	37500
8000*	992	M4GAN44800AAA0	G4P	103.7	307.5	60	$1,650,000	41000
8000	992	M4HAN44800AAA0	H4P	103.7	402.5	60	$1,897,200	56800
9000	1116	M4HAN44900AAA0	H4P	103.7	402.5	60	$1,927,800	60800
10000	1240	M4HAN4410KAAA0	H4P	103.7	402.5	60	$1,968,600	64800
11000	1364	M4HAN4411KAAA0	H4P	103.7	402.5	60	$2,009,400	68800

T300MV2® ASD

T300MV2® - 4160 VAC Output
Pricing & Dimensions

HP	FLA	Model Number	Frame	H	W	D	List Price	Estimated Shipping Weight (lbs.)
				Dimensions (in.)				
With Manual Bypass								
300	37	M4AAN44030EAA0	A4µ	103.7	78	48	$377,877	6300
400	50	M4AAN44040EAA0	A4µ	103.7	78	48	$384,730	6700
500	62	M4AAN44050EAA0	A4µ	103.7	78	48	$388,800	7100
600	74	M4AAN44060EAA0	A4µ	103.7	78	48	$394,565	7300
700	87	M4AAN44070EAA0	A4	103.7	90	48	$395,707	8100
800	99	M4AAN44080EAA0	A4	103.7	90	48	$397,767	8300
900	112	M4AAN44090EAA0	A4	103.7	90	48	$400,070	8500
1000*	124	M4AAN44100EAA0	A4	103.7	90	48	$402,060	8700
1000	124	M4BAN44100EAA0	B4	103.7	120	48	$457,860	10200
1250	155	M4BAN44125EAA0	B4	103.7	120	48	$467,258	10300
1500	186	M4BAN44150EAA0	B4	103.7	120	48	$491,061	11100
1750	217	M4BAN44175EAA0	B4	103.7	120	48	$494,274	12000
2000*	248	M4BAN44200EAA0	B4	103.7	120	48	$506,134	12600
300	37	M40AN44030EAA0	0	103.7	104	42	$340,796	6600
400	50	M40AN44040EAA0	0	103.7	104	42	$353,067	7100
500	62	M40AN44050EAA0	0	103.7	104	42	$357,947	7500
600	74	M40AN44060EAA0	0	103.7	104	42	$363,745	7700
700	87	M40AN44070EAA0	0	103.7	104	42	$366,083	7900
800	99	M40AN44080EAA0	0	103.7	104	42	$369,000	8300
900	112	M40AN44090EAA0	0	103.7	104	42	$378,775	8600
1000*	124	M40AN44100EAA0	0	103.7	104	42	$382,260	9400
1000	124	M41AN44100EAA0	1	103.7	152	42	$441,023	10600
1250	155	M41AN44125EAA0	1	103.7	152	42	$449,378	11300
1500	186	M41AN44150EAA0	1	103.7	152	42	$476,290	12100
1750	217	M41AN44175EAA0	1	103.7	152	42	$479,395	13000
2000*	248	M41AN44200EAA0	1	103.7	152	42	$488,710	13600
2250	279	M42AN44225EAA0	2	103.7	194	48	$638,301	16800
2500	310	M42AN44250EAA0	2	103.7	194	48	$646,603	17600
3000*	372	M42AN44300EAA0	2	103.7	200	48	$748,578	19300
3000	372	M43AN44300EAA0	3	103.7	210	48	$783,680	20200
3500	434	M43AN44350EAA0	3	103.7	210	48	$793,880	21000
4000*	496	M43AN44400EAA0	3	103.7	210	48	$902,400	21800
4000	496	M44AN44400EAA0	4	103.7	258	48	$970,740	25700
4500	558	M44AN44450EAA0	4	103.7	258	48	$986,040	26700
5000	620	M44AN44500EAA0	4	103.7	258	48	$1,003,380	27750
5500	682	M44AN44550EAA0	4	103.7	258	48	$1,020,534	28700
6000*	720	M44AN44600EAA0	4	103.7	258	48	$1,040,100	29750

Notes:
- HP ratings above are for typical 4-pole motors.
- Dimensions do not include space required or clearance for air flow, door operation, etc.
- Bypass Starter pricing is based on fixed contactors (not rack-out type). Please select required Motor Protection relay option.
- Frame 0 & 1 drives with redundant fan option will increase in height by 7" over the standard model.
- Weights and dimensions are subject to change.
- Bypass contactors are used up to 720 amps motor FLA. Above 720 amps motor FLA breakers required for bypass. Please contact factory.
- Units with bypass start the motor across the line for "emergency maintanance bypass" use when the VFD is out of service. Toshiba standard RX5 overload relay is included with bypass at no additional cost. RTD monitoring not included.
- AAA are Standard models; -EAA include Bypass.

*Model numbers with an asterisk have a 110% OL rating. 1000 HP (Frame A4/Frame 0), 2000 HP (Frame B4/Frame 1), 3000 HP (Frame 2), 4000 HP (Frame 3), 6000 HP (Frame 4), and 8000 HP (Frame G4P).

T300MV2® ASD

T300MV2® - 6600 VAC Output
Pricing & Dimensions

HP	FLA	Model Number	Frame	H	W	D	List Price	Estimated Shipping Weight (lbs.)
				Dimensions (in.)				
Without Bypass								
300	23	M4AAN66030AAA0	A6Sμ*	103.7	108	48	$423,295	CF
400	31	M4AAN66040AAA0	A6Sμ*	103.7	108	48	$431,762	CF
500	39	M4AAN66050AAA0	A6Sμ*	103.7	108	48	$440,397	CF
600	47	M4AAN66060AAA0	A6Sμ*	103.7	108	48	$447,300	CF
700	55	M4AAN66070AAA0	A6Sμ*	103.7	108	48	$453,886	CF
800	63	M4AAN66080AAA0	A6Sμ*	103.7	108	48	$460,769	9900
900	70	M4AAN66090AAA0	A6S	103.7	138	48	$554,021	11300
1000	78	M4AAN66100AAA0	A6S	103.7	138	48	$554,902	11600
1250	98	M4AAN66125AAA0	A6S	103.7	138	48	$566,000	12100
1500	117	M4AAN66150AAA0	A6S	103.7	138	48	$577,320	12700
1750	137	M4BAN66175AAA0	B6S*	103.7	176	48	$635,577	15600
2000	156	M4BAN66200AAA0	B6S*	103.7	176	48	$648,290	16300
2250	176	M4BAN66225AAA0	B6S*	103.7	176	48	$661,255	17000
2500	195	M4BAN66250AAA0	B6S*	103.7	176	48	$674,480	17700
3000	234	M4BAN66300AAA0	B6S*	103.7	176	48	$687,970	18400
3500	273	M4CAN66350AAA0	C6S	103.7	234	60	$722,368	26800
4000	313	M4CAN66400AAA0	C6S	103.7	234	60	$736,815	27800
4500	352	M4DAN66450AAA0	D6S	103.7	265	60	$960,840	30500
5000	391	M4DAN66500AAA0	D6S	103.7	265	60	$979,200	31500
5500	430	M4FAN66550AAA0	F6S	103.7	328.5	60	$1,275,786	35000
6000	469	M4FAN66600AAA0	F6S	103.7	328.5	60	$1,301,302	36500
7000	547	M4FAN66700AAA0	F6S	103.7	328.5	60	$1,327,328	38900
8000	625	M4FAN66800AAA0	F6S+	103.7	402.5	60	$1,498,075	41750
9000	703	M4FAN66900AAA0	F6S+	103.7	402.5	60	$1,572,979	44750
With Manual Bypass								
300	23	M4AAN66030EAA0	A6Sμ*	103.7	138	48	$481,595	CF
400	31	M4AAN66040EAA0	A6Sμ*	103.7	138	48	$490,062	CF
500	39	M4AAN66050EAA0	A6Sμ*	103.7	138	48	$498,697	CF
600	47	M4AAN66060EAA0	A6Sμ*	103.7	138	48	$505,600	CF
700	55	M4AAN66070EAA0	A6Sμ*	103.7	138	48	$512,186	CF
800	63	M4AAN66080EAA0	A6Sμ*	103.7	138	48	$519,069	11000
900	70	M4AAN66090EAA0	A6S	103.7	168	48	$602,321	12700
1000	78	M4AAN66100EAA0	A6S	103.7	168	48	$613,202	13000
1250	98	M4AAN66125EAA0	A6S	103.7	168	48	$624,300	13500
1500	117	M4AAN66150EAA0	A6S	103.7	168	48	$635,620	14100
1750	137	M4BAN66175EAA0	B6S*	103.7	206	48	$693,877	16900
2000	156	M4BAN66200EAA0	B6S*	103.7	206	48	$706,590	17400
2250	176	M4BAN66225EAA0	B6S*	103.7	206	48	$719,555	18200
2500	195	M4BAN66250EAA0	B6S*	103.7	206	48	$731,720	19000
3000	234	M4BAN66300EAA0	B6S*	103.7	206	48	$746,270	19800
3500	273	M4CAN66350EAA0	C6S	103.7	264	60	$780,668	29700
4000	313	M4CAN66400EAA0	C6S	103.7	264	60	$795,115	30700
4500	352	M4DAN66450EAA0	D6S	103.7	295	60	$1,019,140	31600
5000	391	M4DAN66500EAA0	D6S	103.7	294	60	$1,058,700	33500

T300MV2® ASD

T300MV2® - 6600 VAC Output
Pricing & Dimensions

HP	FLA	Model Number	Frame	H	W	D	List Price	Estimated Shipping Weight (lbs.)
				Dimensions (in.)				
5500	430	M4FAN66550EAA0	F6S	103.7	364.5	60	$1,355,286	37000
6000	469	M4FAN66600EAA0	F6S	103.7	364.5	60	$1,380,802	38500
7000	547	M4FAN66700EAA0	F6S	103.7	364.5	60	$1,406,828	40000
8000	625	M4FAN66800EAA0	F6S+	103.7	438.5	60	$1,577,575	44650
9000	703	M4FAN66900EAA0	F6S+	103.7	438.5	60	$1,652,479	46750

Notes:
- HP ratings above are for typical 4-pole motors.
- Dimensions do not include space required for clearance for air flow, door operation, etc.
- Bypass Starter pricing is based on fixed contactors (not rack-out type). Please select required Motor Protection relay option.
- Weights and dimensions are subject to change.
- C6S/D6S/F6S/F6S+ are UL/cUL listed. For all other units, consult factory for updated UL status.
- (*) Frame size needs factory approval before quoting.
- CF = Consult Factory.
- Units with bypass start the motor across the line for emergency maintenance bypass use when VFD is out of service. Toshiba standard RX5 overload relay is included with bypass at not additional cost. RTD monitoring not included.
- AAA are Standard models; -EAA include Bypass.

T300MV2® ASD
Option Information & Pricing

Main Input Bus Drives:

$1,500/linear foot for uninsulated bus; $2,000/linear foot for insulated bus.
15” Incoming Section (1200 A) — list price: $15,000 uninsulated, $16,000 insulated
30” Incoming Section (2000 A) — list price: $20,000 uninsulated, $21,000 insulated
Available Frame A4µ/A4/B4 drives only.
When 4160 V Common AC Main uninsulated bus is used for A4µ, A4 and B4 drives, please add 22” for sinewave filter. See Sinewave filter price for details.
Example: If two (2) Frame A4 are connected using Common AC Bus with 15” Incomer, then the price adder for bus is:
Total bus length = 15” + 60” + 60” = 135”
Price adder for bus = (135/12) * $1,500 = $16,875

50 Hz (Option Code B)

Price adder is for magnetics including input isolation transformer, pre-charge reactor, output reactor and low voltage VFD for Fan power (fans are rated at 60Hz).
For 50 Hz, add 15% to the list price.

Example 1:
60 Hz: 4160 V Input and 4160 V Output: M4AAN44050AAA0; 500 HP — list price: $315,000.
50 Hz: 4160 V Input and 4160 V Output: M4ABN44050AAA0; 500 HP — list price: $315,000 plus 15% = $362,250.

BIL Transformer Rating

2400 V: 20 kV for Both Primary and Secondary
3300 V & 4160 V: 30 kV for Both Primary and Secondary
6600 V: 45 kV Primary and 30 kV Secondary
13.8 kV Input Transformer BIL: 60 kV Primary and 30 kV Secondary

To change to 45 kV BIL @ Primary: add 3.5% to the total price of the drive.
Maximum BIL level for A4u/A4/B4 is 45 kV BIL. In case of higher BIL (60 kV), please select Frame 1.

6.9 to 13.8 kV Input

- The HV input option gives users the ability to input >6.9 to 13.8 kV primary voltages directly to the drive transformer. In this option the short circuit rating is 40 kA. This option pricing is available only as a price adder. Published standard dimensions will increase 74” or 26” on width based on the selection of HV equipment.
- The 74” section includes fused input disconnect switch, input contactor, soft charge circuit, and PTs. This arrangement mimics the drive but with HV input.
- The 26” section is comprised of a soft charge circuit without PTs. Input disconnects and fusing is supplied by the user. In this configuration, the customer is to provide 2 PTs in open delta configuration (120-0-120 V) for input voltage monitoring at ASD (100 VA) and also external power 120 V, single-phase, 60 Hz - rated at 1 kVA (non UL listed; short circuit is based on feeder and coordination by others).

Notes:
- No bypass is available with this feature.
- The price of the drive will increase by 10% to accommodate the transformer HV windings and HV pre-charge reactor.
- In case of HV Input; Frame A4µ and A4 ASD will be in Frame 0.
- In case of HV input Frame B4 drives will be in Frame 1.
- No HV Input option for common AC Bus
- For above mentioned frames, select ASD per following page.

T300MV2® ASD

Option Information & Pricing

MV Frame	MV Input Frame	Price
Frame A2/B2/D2	Max Permissible 6600 V	CF (Consult Factory)
Frame A4µ, A4 & 0	Frame 0	Use 1000 HP (Frame 1) x 110% Price + Selected HV Input Price
Frame B4	Frame 1	Drive Price (Frame1) x 110% Price + Selected HV Input Price
Frame 1, 2, 3, 4, G4P & H4P	No Change	Drive Price x 110% + Selected HV Input Price
For 6600 V Drives	CF (Consult Factory)	CF (Consult Factory)

Frame Size	Description	Price
Frames 0 to 4	Up to 15 kV Input — Includes Fused Input Disconnect, Input Breaker, Soft Charge Circuit, and PT (add 74” to Width)	$85,700
Frames G4P & H4P	Up to 15 kV Input — Includes Fused Input Disconnect, Input Breaker, Soft Charge Circuit, and PTs (add 23” to Width)	$97,800
Frames 0 to 4	Up to 15 kV Input without Disconnect, Load Break Switch or PTs (add 26” to Width) (Non-UL)	$26,800
Frames G4P & H4P	Up to 15 kV Input without Disconnect - Not Available	N/A

Example 1: 1,250 HP, 13.8 kV input with 4160 V output. This is a Frame B4 rating but will be housed in a Frame 1 (122”) enclosure. Use the Frame 1, 1,250 HP price of $385,000 and add the 74” section at $85,700. Total list price equals $470,700. Overall dimension will be 196” (122” + 74”). Part number will be M41ANH4125AAA0.

Example 2: 2,500 HP, 12.4 kV input with 4160 V output, Input disconnect (breaker/contactor) is customer-supplied. This is a Frame 2 drive at 164”. The 26” section has no PT, so control power is supplied from a separate power supply. The T300MV2® price is $574,000 plus 10%, which equals $631,400. The 26”section is $26,800, for a total list price of $658,200. Part number will be M42ANF4250DAA0.

Examples use list price only. Final pricing will be different based on option multipliers.

T300MV2® ASD
Option Information & Pricing

Sync-Xfer

Sync-Xfer is a technological feature of the T300MV2 drives. With sync-xfer function, the drive can synchronize with the utility supply and transfer the motor operating on ASD in variable speed mode to utility power for fixed speed operation. This is a close-couple transition using bypass section consisting of bypass and drive output contactors. Additionally, the motor operating in fixed speed mode can be captured from utility power and transferred to ASD for variable speed operation.

Sync-Xfer can have a significant impact in lowering a system cost in applications where multiple motors are controlled with one ASD and/or one ASD is used for soft starting the motors one at a time.

Sync-Xfer applications require sync ready drive with following options added to standard ASD pricing.

	Item	Description
1	Sync Ready Kit includes sync reactor, one output PT, and sync check relay	Use Price Book to Select the Sync Ready Kit Price Based on Frame Size.
2	Bypass section with feedback CTs	Use Price Book to Select the Bypass Section. One Section is Required per Motor.
3	Motor Protection Relay	Use Price Book to Select the Motor Protection Relay. One Relay is Required per Motor.
4	Selection Logic with PLC	Required for complex sync transfer applications. Consult Factory.
5	Customer-Supplied MCC	Consult Factory.
6	Multiple Motors	Consult Factory.
7	Sync-Xfer System with two ASDs	Consult Factory.

Notes:
- ASD with one motor sync transfer - price per above guidelines
- For more than one motor and all other applications - Consult factory

T300MV2® ASD

Option Information & Pricing

Option Code	Description	Price
12th Digit D	2400 V	
	Sync Ready Kit - Frame A2	$17,750
	Sync Ready kit - Frame B2	$19,500
	Sync Ready Kit - Frame D2 up to 1500 HP	$22,250
	Sync Ready Kit- Frame D2 above 1500 HP	$24,480
	Sync Ready Kit - Frame 4	CF
	4160 V	
	Sync Ready Kit - Frame A4µ/A4/0	$17,750
	Sync Ready Kit - Frame B4/1	$13,475
	Sync Ready Kit - Frame 2	$22,250
	Sync Ready Kit - Frame 3 & 3000 HP Frame 2	$24,480
	Sync Ready Kit - Frame 4 & 4000 HP Frame 3	$29,100
	Sync Ready Kit - Frame G4P	$38,500
	Sync Ready Kit - Frame H4P	$47,000
	6600 V	
	Sync Ready Kit - Frame C6S	CF
	Sync Ready Kit - Frame D6S	CF
	Sync Ready Kit - Frame F6S	CF
	Sync Ready Kit - Frame F6S+	CF
	Bypass sections with feedback CTs - 360 amps contactor.	$50,000
	For one motor only. Consult factory for more than two motors	
	Bypass sections with feedback CTs - 720 amps	$72,000
	For one motor only. Consult factory for more than two motors	

Notes:
- CF = Consult Factory

T300MV2® ASD
Option Information & Pricing

Typical Layout for Sync-Xfer

Please contact factory, as many variations are available.

Frame A4µ/A4/A2/B4/B2/0/1: Sync-Xfer Arrangement for Single Motor

<table>
<tr><td>BYP 1</td><td rowspan="2">A4µ/A4/A2/B4/B2/0/1</td></tr>
<tr><td>ASD 1</td></tr>
</table>

Frame 2,3 & 4: Sync-Xfer Arrangement for Single Motor

<table>
<tr><td rowspan="2">Frame 2/3/4</td><td>BYP 1</td></tr>
<tr><td>ASD 1</td></tr>
</table>

T300MV2® ASD
Option Information & Pricing

Solid State Starter Maintenance Bypass

The Toshiba JKSSS Plus Series digital, reduced-voltage, solid state starter is designed to be a superior method of providing soft-start control and protection for AC motors while in Bypass. Advantages include solid state construction, advanced motor protection, step-less acceleration, reduced inrush current, minimal maintenance, and high-duty cycle capability. Published dimensions will increase based on the size of additional equipment.

Rating	Description	Price
2400 V		
300 to 450 HP	SSS Bypass	CF
500 to 900 HP		CF
1000 to 1500 HP		CF
1750 HP	SSS Bypass	CF
2000 to 2500 HP		CF
3300 V		
500 to 700 HP	SSS Bypass	CF
800 to 1500 HP		CF
1750 to 2250 HP		CF
2500 to 3500 HP	SSS Bypass	CF
4000 to 4500 HP		CF
4160 V		
500 to 900 HP	SSS Bypass	CF
1000 to 1750 HP		CF
2000 to 2500 HP		CF
3000 to 3500 HP	SSS Bypass	CF
4000 to 6000 HP		CF
5000 to 6000 HP (max. 720 Amps)		CF

Notes:
- In case of solid state starter bypass, consult PAC Department. Only solid state starter shall be ordered as a separate line item.
- Toshiba Standard RX5 simple overload relay is included in bypass at no additional cost. RTD monitoring not included.

T300MV2® ASD
Option Information & Pricing

Reduced Voltage Auto-Transformer Bypass

The reduced voltage auto-transformer (RVAT) bypass provides the owner with a means of limiting the inrush current by reducing initial voltage supplied to the motor during starting, resulting in a mechanical soft-start. Published dimensions will increase based on the size of additional equipment.

Rating	Description	Price
300 to 800 HP, 2400 V 500 to 1750 HP, 4160 V	RVAT Bypass — Adds 72” to Base Dimensions	CF
900 to 1750 HP, 2400 V 2000 to 3000 HP, 4160 V		CF
2000 to 2500 HP, 2400 V 4000 to 5000 HP, 4160 V	RVAT Bypass — Adds 108” to Base Dimensions	CF

Notes:
- Reduced voltage auto-transformer bypass shall be ordered as a separate line item.
- CF = Consult Factory.
- Toshiba Standard RX5 simple overload relay is included in bypass at no additional cost. RTD monitoring not included.

T300MV2® ASD
Option Information & Pricing

DV/DT Output Filter

A DV/DT output filter is recommended for lead-length from 1,000 ft. to 2,000 ft.

Option Code	Size	Description	Price
12th Digit B	2400 V		
	Frame A2	Output DV/DT Filter	$16,550
	Frame B2		$18,475
	Frame D2 1250 HP - 1500 HP		$21,170
	Frame D2 1750 HP - 2000 HP		$23,400
	Frame 4		$28,100
	3300 V		
	Frame A4µ/A4	Output DV/DT Filter	$16,550
	Frame B4		$18,475
	Frame 2		$21,170
	Frame 3		$23,400
	Frame 4		$28,100
	4160 V		
	Frame A4µ/A4/0	Output DV/DT Filter	$16,550
	Frame B4/1		$18,475
	Frame 2		$21,170
	Frame 3		$23,400
	Frame 4		$28,100
	Frame G4P		$37,500
	Frame H4P		$45,000

Sinewave Output Filters

A sinewave output filter is recommended for lead-lengths above 2,000 feet up to 6 miles. Sinewave output filters are recommended in applications where a step-up transformer is used on the output of the drive.

Option Code	Size	Cabinet Width	Description	Price
12th Digit E	2400 V			
	Frame A2/B2/C2/D2	N/A	N/A	N/A
	Frame 4	N/A		N/A
	4160 V			
	Frame A4µ	N/A		$23,000
	Frame A4µ Common AC Bus	22"	Sine Wave output filter	$45,000
	Frame A4	N/A		$25,000
	Frame A4 Common AC Bus	22"		$45,000
	Frame B4	22"		$55,000
	Frame 0	N/A		$24,000
	Frame 1	N/A		$33,500
	Frame 2	40"		$65,000
	Frame 3	40"		$83,000
	Frame 4	40"		$109,000
	Frame G4P	48"		$127,000
	Frame H4P	48"		$172,000

Notes:
- 6000 HP, G4P/H4P with sine wave filter is not UL listed

T300MV2® ASD
Option Information & Pricing

Redundant Fans

Redundant fan option includes two groups of fans. A main control board is used to program the redundant fan logic for cycling fan groups at a set interval. Upon failure of a fan in any one group, the programs will automatically cycle the drive cooling to the second fan group without stopping the drive. A fan fault alarm will be annunciated.

Option Code	Size	Description	Price
11th Digit J through R	Frame A2, B2	Redundant Fans	$7,675
	Frame D2		$21,950
	Frame A4µ, A4, B4. 0, 1		$7,675
	Frame 2, 3		$21,950
	Frame 4		$32,775
	Frame G4P		$64,780
	Frame H4P		$80,700
	Frame A6Sµ		$7,680
	Frame A6S		$11,520
	B6S		$21,960
	Frame C6S, D6S		$48,310
	Frame F6S		$69,720
	Frame F6S+		$102,660
FRS	Frame A4µ, A4, 0	Drives with Sinewave filter	$7,675
	Frame B4		$11,520
	Frame 1		$7,675
	Frame 2, 3		$27,440
	Frame 4		$38,265
	Frame G4P		$70,270
	Frame H4P		$86,190
FRS-CB	Frame A4µ, A4, B4 Common AC Bus	Drives with Sinewave filter	$11,515

Drive & Motor Space Heater

Option Code	Size	Description	Price
EDH	Frame A2	Drive space heater operating voltage 208/240 VAC. External power required	$2,200
	Frame B2		$3,200
	Frame D2		$4,400
	Frame A4µ, A4, B4, 0, 1		$2,200
	Frame 2		$3,200
	Frame 3		$4,400
	Frame 4		$5,400
	Frame G4P, H4P		$8,500
EHM1	Power Provided Seperately	Basic motor space heater control circuit to turn motor space heater ON (up to 10 amps) when drive is not operating. External 120V/240V power supplied by customer. For special requirements, consult factory.	$2,220
EHM2	Power Provided Seperately	Motor space heater circuit with indicating light. External power supplied by customer	$2,800

T300MV2® ASD
Option Information & Pricing

Communication Interface

Option Code	Description	Price
CS	TOSLINE-S20LP Communication Card with FC Connector (Tosline-S20 with F07 Connector Included on Control Board)	$2,533
CD	DeviceNet Communication Card	$3,833
CF	Profibus Communication Card	$4,255
CR	Modbus RTU/ModBus TCP IP/Ethernet Communication Card	$3,200
CE	Ethernet Global Data (EGD) Communication Card	$4,000
CN	TCNET Communication Card	$4,000

Keyed Door Interlocks

The end-user address is required. Default key manufacturer is Superior.

Option Code	Description	Price
KK	Single Lock	$1,400
	Transfer Blocks w/3 Locks	$3,500
	Transfer Blocks w/4 Locks	$4,500
	Transfer Blocks w/5 Locks	$5,500
	Transfer Blocks w/6 Locks	$6,500
	Transfer Blocks w/7 Locks	$7,500

Note: KIRK© Key Brand: add $1,000 to pricing.

T300MV2® ASD
Option Information & Pricing

Door-Mounted Equipment - Meters

Option Code	Description	Price
M5	Multilin 869, 12-channel, RTD monitor (869 E-P5-NN-G5-H-R-R-A-N-N-G-S-S-F-B-SE-N-N-B) Includes Output Phase CTs & One Output Ground CT	$26,000
M5-1	Multilin 869, 12-channel, RTD monitor (869 E-P5-NN-G5-H-R-R-A-N-N-G-S-S-F-B-SE-N-N-B) Includes Output Phase CTs, One Output Ground CT & Output PTs	$30,000
MA	Output Amp Meter using Drive Analog Output 4 to 20 mA	$2,000
MF	Output Frequency Meter using Drive Analog Output	$2,000
MV	Output Volt Meter using Drive Analog Output	$2,000
ME	Elapsed Time Meter	$400
MX	Miscellaneous Meter	CF
MQ	PQMII-T20 - Mod 525, Multilin Input Power Quality Meter with Input Phase CTs	$17,800
MQ-1	PQMII-T20 - Mod 525, Multilin Input Power Quality Meter with Input Phase CTs & Power Analysis Option	$20,000
RT	Door-mounted TIC-TE-RTD12 - IEC (RTD Monitor)	$2,800
TPR6	TPR6 relay to monitor up 14 RTDs (TPR6-14-2-M-F5)	$8,500
TPR6-1	TPR6 relay to monitor up 14 RTDs (TPR6-14-2-M-F5). RS485 to Ethernet TCP/IP media converter	$11,000
AFR-5	Arc-flash Relay with Optical Sensors (A4µ/A4/B4/Frame 1) Little Fuse. Consult Factory for UL Status	$29,000

Pilot Lights

Option Code	Description	Price
LED	LED full voltage indicating light	$450
Push to Test	Push to Test LED full voltage indicating light	$650

For motor protection relays:

1. Motor differential protection (87M) CTs are not included. These CTs are typically provided in the motor terminal box and are supplied by the motor manufacturer.
2. Multilin 869 relay part number must be properly selected for Ground CT ratios. Ground CT with 1A or 5A secondary is connected to Slot J and Differential core balance CT with 0.025 secondary is connected to Slot K.
3. The output CTs used with the motor protection relay are Class C10. For other CT Class, please consult factory.

T300MV2® ASD
Option Information & Pricing

Push-Buttons

Option Code	Description	Price
PBI	IEC Style	$300
PBN	NEMA style	$450

Notes:
- Mounted on drive enclosure.

Speed Potentiometer & Switches

Option Code	Description	Price
S1	Speed Control Potentiometer	$450
S2	Speed Control Potentiometer with Local/Remote Switch	$650

Software

Option Code	Description	Price
CF	MVD Tool	$3,100

Miscellaneous Options

Option Code	Description	Price
RX	IEC Relay Outputs 115 V, 2 A, Form-C	$450
SP	Interposing Relay with 24 VDC Coil	$650
X1	4 to 20 mA Isolation Transducer	$1,440

Selector Switch

Option Code	Description	Price
S1	Selector Switch - 2 Position	$450
S2	Selector Switch - 3 Position	$650

T300MV2® ASD
Spare Parts Kits

Toshiba recommends a separate line item on the purchase order for spare parts. Spare Parts Kits provide an easy and practical way to acquire the proper spare parts to handle most emergencies. Spare Parts Kits contain one of each circuit board, one low voltage power supply, rectifier fuses, diodes, one set of control power fuses, four potential transformer fuses, three input fuses.

Spare Parts Kits can be ordered with or without a power module. To order a Spare Parts Kit, please use the following numbering convention:

Example Part Number:	SPK-M4	A	A	N	4	4	050	A	-1

Series:
M4 - MV2

Frame Type:

0 - Frame 0	A - Frame A	E - Frame E
1 - Frame 1	B - Frame B	F - Frame F
2 - Frame 2	C - Frame C	G - Frame G
3 - Frame 3	D - Frame D	H - Frame H
4 - Frame 4		

Input Frequency:
A - 60 Hz

Type:
N - For Non-Regen Drives
R - Regen Module Drives

Input Voltage:

2 - 2400	7 - 6900	E - 12000
3 - 3300	A - 7200	F - 12470
4 - 4160	B - 8320	G - 13200
5 - 4800	C - 10000	H - 13800
6 - 6600	D - 11000	Z - Other

Output Voltage:
2 - 2400 3 - 3300 4 - 4160 6 - 6600

Output Rated Capacity:

030 - 300 HP	070 - 700 HP	175 - 1750 HP	400 - 4000 HP	800 - 8000 HP
035 - 350 HP	080 - 800 HP	200 - 2000 HP	450 - 4500 HP	900 - 9000 HP
040 - 400 HP	090 - 900 HP	225 - 2250 HP	500 - 5000 HP	10K - 10000 HP
045 - 450 HP	100 - 1000 HP	250 - 2500 HP	550 - 5500 HP	11K - 11000 HP
050 - 500 HP	125 - 1250 HP	300 - 3000 HP	600 - 6000 HP	
060 - 600 HP	150 - 1500 HP	350 - 3500 HP	700 - 7000 HP	

Configuration:
A - Standard Fans
1 - Redundant Fans

Power Module:
-1 (Included)

T300MV2® ASD

Spare Parts Kits

Input fuses will change as HP changes. Spare Parts Kits contain:

Item	2400 V Qty.	3300V Qty	4160 V Qty.	Description	Part Number
1	1	1	1	Control Board	PC61910P200C
2	1	1	1	GSD Board	PC61910P203A
3	1	1	1	XIO Board	PC61910P201B
4	1	1	1	EXIO Board	PC61910P205B
5	1	1	1	Interface Board	Job/Inverter Specific
6	1	1	1	External Interface Board	PC61910P206A
7	1	1	1	Keypad Interface Board	PC61910P204A
8	1	1	1	Display/Keypad	PC61910P216
9	1	1	1	Power Supply	GCI6720G282
10	1	1	1	GDI Board	PC61910P085A
11	1	1	1	PDM Board	PC61910P107A
12	2	2	2	Control Power Fuse	HP-Specific
13	3	3	3/6	Input Fuse	HP-Specific
14	4	4	4	CPT Fuse	PC16109P902*
15	4	12	12	Rectifier Fuse	HP-Specific
16	4	12	12	Diode Pack	HP-Specific
17	1	1	1/2	Power Module (One Phase)**	HP-Specific
18	1	1	1/2	Cooling Fan	HP & Application Specific

*6000 HP and below only
**Only included in kits designated with -1

Notes:

- Spare parts list are not applicable for high voltage inputs. Contact factory for pricing.
- Prices valid when ordering along with drive.

T300MV2® ASD
Spare Parts Kits

Part Number w/o PM, with Redundant Fan	List Price	Frame	Part Number w/PM & Redundant Fan	List Price
2400 V Kits				
SPK-M4BAN22030J to SPK-M4BAN22050J	$29,770	A2	SPK-M4BAN22030J-1 to SPK-M4BAN22050J-1	$43,420
SPK-M4BAN22060J to SPK-M4BAN22100J	$31,500	B2	SPK-M4BAN22060J-1 to SPK-M4BAN22100J-1	$45,410
SPK-M4BAN22125J to SPK-M4BAN22200J	$34,450	D2	SPK-M4BAN22125J-1 to SPK-M4BAN22200J-1	$51,150
SPK-M4BAN22225J to SPK-M4BAN22300J	$37,030	4	SPK-M4BAN22225J-1 to SPK-M4BAN22300J-1	$117,175
3300 V Kits				
SPK-M4ABN33030J to SPK-M4ABN33045J	$29,675	A4µ	SPK-M4ABN33030J-1 to SPK-M4ABN33045J-1	$61,475
SPK-M4ABN33050J to SPK-M4ABN33070J	$30,300	A4	SPK-M4ABN33050J-1 to SPK-M4ABN33070J-1	$62,550
SPK-M40BN33030J to SPK-M40BN33070J	$27,190	0	SPK-M40BN33030J-1 to SPK-M40BN33070J-1	$58,080
SPK-M41BN33080J to SPK-M41BN33150J	$32,580	1	SPK-M41BN33080J-1 to SPK-M41BN33150J-1	$78,930
SPK-M4BBN33080J to SPK-M4BBN33150J	$32,580	B4	SPK-M4BBN33080J-1 to SPK-M4BBN33150J-1	$78,930
SPK-M42BN33175J to SPK-M42BN33225J	$38,050	2	SPK-M42BN33175J-1 to SPK-M42BN33225J-1	$105,195
SPK-M43BN33225J to SPK-M43BN33300J	$38,800	3	SPK-M43BN33225J-1 to SPK-M43BN33300J-1	$131,550
SPK-M44BN33300J to SPK-M44BN33450J	$43,300	4	SPK-M44BN33300J-1 to SPK-M44BN33450J-1	$161,100
4160V Kits				
SPK-M4AAN44030J to SPK-M4AAN44060J	$29,860	A4µ	SPK-M4AAN44030J-1 to SPK-M4AAN44060J-1	$58,450
SPK-M4AAN44070J to SPK-M4AAN44100J	$33,290	A4	SPK-M4AAN44070J-1 to SPK-M4AAN44100J-1	$62,250
SPK-M40AN44030J to SPK-M40AN44100J	$33,290	0	SPK-M40AN44030J-1 to SPK-M40AN44100J-1	$62,250
SPK-M41AN44125J to SPK-M41AN44200J	$34,670	1	SPK-M41AN44125J-1 to SPK-M41AN44200J-1	$77,890
SPK-M4BAN44125J to SPK-M4BAN44200J	$34,670	B4	SPK-M4BAN44125J-1 to SPK-M4BAN44200J-1	$77,890
SPK-M42AN44225J to SPK-M42AN44300J	$37,170	2	SPK-M42AN44225J-1 to SPK-M42AN44300J-1	$104,425
SPK-M43AN44300J to SPK-M43AN44400J	$38,560	3	SPK-M43AN44300J-1 to SPK-M43AN44400J-1	$130,250
SPK-M44AN44400J to SPK-M44AN44600J	$42,560	4	SPK-M44AN44400J-1 to SPK-M44AN44600J-1	$161,550
SPK-M4GAN44700J to SPK-M4GAN44800J	$41,375	G4P	SPK-M4GAN44700J-1 to SPK-M4GAN44800J-1	$227,600
SPK-M4HAN44800J to SPK-M4HAN4411KJ	$45,000	H4P	SPK-M4HAN44800J-1 to SPK-M4HAN4411KJ-1	$280,775

Notes:
- Prices valid when ordered along with drive.

*Parallel configuration contains two power modules in the kit.

T300MV2® ASD

Spare Parts Kits

Part Number w/o PM, with Std Fan	List Price	Frame	Part Number w/PM & Std Fan	List Price
2400 V Kits				
SPK-M4BAN22030A to SPK-M4BAN22050A	$26,560	A2	SPK-M4BAN22030A-1 to SPK-M4BAN22050A-1	$40,170
SPK-M4BAN22060A to SPK-M4BAN22100A	$28,250	B2	SPK-M4BAN22060A-1 to SPK-M4BAN22100A-1	$44,260
SPK-M4BAN22125A to SPK-M4BAN22200A	$31,190	D2	SPK-M4BAN22125A-1 to SPK-M4BAN22200A-1	$50,050
SPK-M4BAN22225A to SPK-M4BAN22300A	$34,080	4	SPK-M4BAN22225A-1 to SPK-M4BAN22300A-1	$114,225
3300 V Kits				
SPK-M4ABN33030A to SPK-M4ABN33045A	$29,675	A4µ	SPK-M4ABN33030A-1 to SPK-M4ABN33045A-1	$61,475
SPK-M4ABN33050A to SPK-M4ABN33070A	$30,300	A4	SPK-M4ABN33050A-1 to SPK-M4ABN33070A-1	$62,550
SPK-M40BN33030A to SPK-M40BN33070A	$30,300	0	SPK-M40BN33030A-1 to SPK-M40BN33070AJ-1	$62,550
SPK-M41BN33080A to SPK-M41BN33150A	$32,580	1	SPK-M41BN33080A-1 to SPK-M41BN33150A-1	$78,930
SPK-M4BBN33080A to SPK-M4BBN33150A	$32,580	B4	SPK-M4BBN33080A-1 to SPK-M4BBN33150A-1	$78,930
SPK-M42BN33175A to SPK-M42BN33225A	$38,050	2	SPK-M42BN33175A-1 to SPK-M42BN33225A-1	$105,195
SPK-M43BN33225A to SPK-M43BN33300A	$38,800	3	SPK-M43BN33225A-1 to SPK-M43BN33300A-1	$131,550
SPK-M44BN33300A to SPK-M44BN33450A	$43,300	4	SPK-M44BN33300A-1 to SPK-M44BN33450A-1	$161,100
4160 V Kits				
SPK-M4AAN44030A to SPK-M4AAN44060A	$29,860	A4µ	SPK-M4AAN44030A-1 to SPK-M4AAN44060A-1	$5,180
SPK-M4AAN44070A to SPK-M4AAN44100A	$29,990	A4	SPK-M4AAN44070A-1 to SPK-M4AAN44100A-1	$60,920
SPK-M40AN44030A to SPK-M40AN44100A	$29,900	0	SPK-M40AN44030A-1 to SPK-M40AN44100A-1	$60,920
SPK-M41AN44125A to SPK-M41AN44200A	$31,370	1	SPK-M41AN44125A-1 to SPK-M41AN44200A-1	$77,620
SPK-M4BAN44125A to SPK-M4BAN44200A	$31,370	B4	SPK-M4BAN44125A-1 to SPK-M4BAN44200A-1	$77,620
SPK-M42AN44225A to SPK-M42AN44300A	$38,140	2	SPK-M42AN44225A-1 to SPK-M42AN44300A-1	$105,290
SPK-M43AN44300A to SPK-M43AN44400A	$39,350	3	SPK-M43AN44300A-1 to SPK-M43AN44400A-1	$132,100
SPK-M44AN44400A to SPK-M44AN44600A	$44,185	4	SPK-M44AN44400A-1 to SPK-M44AN44600A-1	$161,990
SPK-M4GAN44700A to SPK-M4GAN44800A	$47,885	G4P	SPK-M4GAN44700A-1 to SPK-M4GAN44800A-1	$233,385
SPK-M4HAN44800A to SPK-M4HAN4411KA	$51,775	H4P	SPK-M4HAN44800A-1 to SPK-M4HAN4411KA-1	$287,375

Notes:

- Prices valid when ordered along with drive.

*Parallel configuration contains two power modules in the kit.

T300MV2® ASD
Spare Parts Kits

Item	6600 V Qty. (300 to 3000 HP)	Description	Part Number
1	1	Control Board	PC61910P200C
2	1	GSD Board	PC61910P203A
3	1	XIO Board	PC61910P201B
4	1	EXIO Board	PC61910P205B
5	1	Interface Board	HP-Specific
6	1	External Interface Board	PC61910P206A
7	1	Keypad Interface Board	PC61910P204A
8	1	Display/Keypad	PC61910P216
9	1	Power Supply	GCI6720G282
10	1	GDI Board	PC61910P085A
11	1	PDM Board	PC61910P107A
12	2	Control Power Fuse	HP-Specific
13	3	Input Fuse	HP-Specific
14	2	CPT Fuse	PC31029P002
15	10/16	Rectifier Fuse	HP-Specific
16	10/16	Diode Pack	HP-Specific
17	1	Cooling Fan	HP & Application Specific
18	1	Power Module (One Phase)**	HP-Specific

Part Number w/o PM, with Redundant Fan	List Price	Frame	Part Number w/PM & Redundant Fan	List Price
6600 V Kits				
SPK-M4AAN66030J to SPK-M4AAN66080J	$35,800	A6Sμ	SPK-M4AAN66030J-1 to SPK-M4AAN66080J-1	$70,400
SPK-M4AAN66090J to SPK-M4AAN66150J	$36,950	A6S	SPK-M4AAN66090J-1 to SPK-M4AAN66150J-1	$85,650
SPK-M4BAN66175J to SPK-M4BAN66300J	$40,150	B6S	SPK-M4BAN66175J-1 to SPK-M4BAN66300J-1	$105,400
SPK-M4CAN66350J to SPK-M4CAN66400J	$54,800	C6S	SPK-M4CAN66350J-1 to SPK-M4CAN66400J-1	$144,650
SPK-M4DAN66450J to SPK-M4DAN66500J	$58,200	D6S	SPK-M4DAN66450J-1 to SPK-M4DAN66500J-1	$186,750
SPK-M4FAN66550J to SPK-M4FAN66700J	$62,100	F6S	SPK-M4FAN66550J-1 to SPK-M4FAN66700J-1	$221,350
SPK-M4FAN66800J to SPK-M4FAN66900J	$64,800	F6S+	SPK-M4FAN66800J-1 to SPK-M4FAN66900J-1	$225,150

Part Number w/o PM, with Std Fan	List Price	Frame	Part Number w/PM & Std Fan	List Price
6600 V Kits				
SPK-M4AAN66030A to SPK-M4AAN66080A	$23,500	A6Sμ	SPK-M4AAN66030A-1 to SPK-M4AAN66080A-1	$69,200
SPK-M4AAN66090A to SPK-M4AAN66150A	$33,650	A6S	SPK-M4AAN66090A-1 to SPK-M4AAN66150A-1	$83,450
SPK-M4BAN66175A to SPK-M4BAN66300A	$36,850	B6S	SPK-M4BAN66175A-1 to SPK-M4BAN66300A-1	$102,100
SPK-M4CAN66350A to SPK-M4CAN66400A	$48,150	C6S	SPK-M4CAN66350A-1 to SPK-M4CAN66400A-1	$138,000
SPK-M4DAN66450A to SPK-M4DAN66500A	$51,500	D6S	SPK-M4DAN66450A-1 to SPK-M4DAN66500A-1	$180,100
SPK-M4FAN66550A to SPK-M4FAN66700A	$55,450	F6S	SPK-M4FAN66550A-1 to SPK-M4FAN66700A-1	$214,700
SPK-M4FAN66800A to SPK-M4FAN66900A	$58,150	F6S+	SPK-M4FAN66800A-1 to SPK-M4FAN66900A-1	$218,500

Notes:
- Power module pricing includes one 2400 V and one 4160 V module.

T300MV2® ASD

Heat Loss Data
(Standard Duty Drive)

Voltage	Motor HP	Motor kW	Output kVA	Losses	
				kW	BTU/hr
2400	300	233	268	8.1	27,551
	350	272	313	9.4	31,919
	400	311	357	10.7	36,623
	450	350	402	12.1	41,327
	500	389	447	13.4	45,695
	600	466	536	16.1	54,767
	700	544	625	18.7	63,838
	800	622	715	21.5	73,246
	900	699	804	24.1	82,318
	1000	777	893	26.8	91,390
	1250	971	1116	33.5	114,237
	1500	1166	1340	40.2	137,085
	1750	1360	1563	46.9	159,932
	2000	1554	1786	53.6	182,780
	2250	1748	2010	60.3	205,627
	2500	1943	2233	67.0	228,475
	3000	2331	2680	80.4	274,169

T300MV2® ASD

Heat Loss Data
(Standard Duty Drive)

Voltage	Motor HP	Motor kW	Output kVA	Losses	
				kW	BTU/hr
4160	300	233	268	8.2	27,849
	350	272	313	9.5	32,511
	400	311	357	10.9	37,172
	450	350	402	12.3	41,834
	500	389	447	13.6	46,495
	600	466	536	16.3	55,699
	700	544	625	19.0	65,022
	800	622	715	21.8	74,345
	900	699	804	24.5	83,548
	1000	777	893	27.2	92,871
	1250	971	1116	34.0	116,059
	1500	1166	1340	40.8	139,366
	1750	1360	1563	47.6	162,554
	2000	1554	1786	54.4	185,742
	2250	1748	2010	61.2	208,930
	2500	1943	2233	68.0	232,237
	3000	2331	2680	81.6	278,613
	3500	2720	3126	95.2	325,108
	4000	3108	3573	108.8	371,484
	4500	3497	4019	122.4	417,979
	5000	3885	4466	136.0	464,355
	5500	4274	4913	149.6	510,850
	6000	4662	5359	163.2	557,226
	7000	5439	6252	190.4	650,096
	8000	6216	7145	217.6	742,967
	9000	6993	8038	244.8	835,838
	10000	7770	8931	272.0	928,709
	11000	8590	9828	299.6	1,021,160

T300MV2® ASD

Heat Loss Data (Standard Duty Drive)

Voltage	Motor HP	Motor kW	Output kVA	Losses	
				kW	BTU/hr
6600	300	234	267	11.9	40,606
	350	273	312	13.4	45,665
	400	312	357	14.7	50,140
	450	351	401	15.5	52,752
	500	390	446	16.8	57,354
	600	468	535	19.8	67,403
	700	546	624	21.9	74,872
	800	623	713	24.4	83,293
	900	701	802	27.1	92,548
	1000	779	892	29.0	98,846
	1250	974	1115	35.8	122,045
	1500	1169	1337	41.6	141,870
	1750	1364	1560	48.7	166,121
	2000	1559	1783	54.6	186,322
	2250	1753	2006	61.4	209,391
	2500	1948	2229	67.4	229,846
	3000	2338	2675	80.3	274,097
	3500	2728	3121	94.3	321,785
	4000	3117	3567	107.4	366,635
	4500	3507	4012	120.8	412,317
	5000	3896	4458	134.2	458,000
	5500	4286	4904	147.6	503,683
	6000	4676	5350	160.0	545,924
	7000	5455	6242	184.8	630,698
	8000	6234	7133	216.6	738,982
	9000	7014	8025	245.1	836,373

MTX2® NEMA 3R ASD
Specifications

NEW PRODUCT

The MTX2 NEMA 3R outdoor medium voltage adjustable speed drive is one of the most innovative adjustable speed drive offerings to date. A smaller footprint and improved MTTR are the result of an advanced enclosure design and power section topology. The MTX2 is specifically designed for outdoor mounting in remote locations with extreme temperature conditions.

Product Scope

4160 V at 500 to 1,500HP and 3,500 to 6,000HP

Highlights

- Outdoor Design UL-Rated Rainproof (NEMA 3R) Enclosure
- Distribution-Quality Lightning Arrestors as Standard
- 36-Pulse Harmonic Cancellation Complies with IEEE-519 2014
- Higher True Factor (>0.96) than Running Motors Across-the-Line
- Provides Easy Monitoring & Maintenance through Advanced User Interface Design
- Removable Power Modules
- Totally Enclosed Cooling System
- Allows for Standard Motors to be Used in Conjunction with Drive Without Special Motor Insulation

Standard Features

- 100% Continuous Overload Rating, 115% for 60 Seconds
- NEMA 3R Enclosure
- Ten Discrete Digital Input Terminals with Programmable Functions
- Ten Available Digital Programmable Outputs
- Three Analog Inputs; Isolation Transducer Required
- Eight Analog Outputs; Isolation Transducer Required
- Medium Voltage IGBT Technology
- EOI: Plain-English LCD Display
- Ambient Temperature: -49° to 122°F (-45° to 50°C)
- Humidity: 95% No Condensation;
  100% when Heaters Energized
- Externally Powered Space Heaters
- Standards & Compliances: NEC, NEMA, & ANSI

MTX2® NEMA 3R ASD

Part Numbering Convention

The MTX2 can be configured with commonly-used options for an easy-to-install, turn-key package. See the chart below for available configurations. Custom packages are available upon request. Drawings supplied by Toshiba's MV Drives Department.

The example below, MX45AN44050AAA0, shows a standard duty MTX2, 500 HP, 4160 V input, 4160 V output with input disconnect and cooling fan power.

Example Part Number:	MX4	0	A	N	4	4	050	A	A	A	xxx

Series:
MX4 -- MV2 Outdoor

Frame type:
4 -- MTX2-60
5 -- MTX2-15 (Stacked)
6 -- MTX2-15 (Low profile)

Input Frequency:
A -- 60 Hz
B -- 50 Hz

Type:
N -- For non regen drives
R -- Regen Module Drives

Input Voltage:
4 -- 4160

Output Voltage:
4 -- 4160

Output Rated Capacity

050 --500 HP	350 -- 3500 HP	500 -- 5000 HP
100 -- 1000 HP	400 -- 4000 HP	550 -- 5500 HP
150 -- 1500 HP	450 -- 4500 HP	600 -- 6000 HP

Configuration:

	ID:	CP:	BYP:
A --	Yes	Yes	No
B --	Yes	No	No
C --	No	Yes	No
D --	No	No	No

ID -- Input Disconnect
CP -- Internal Cooling Fan Power

Output Options:
A -- Standard reactor
D -- Transfer
E -- Sinwave Filter
F -- Sinewave Filter and Transfer

Enclosure Options:
A -- Standard paint
B -- Stainless steel

Additional Options:
Additional numbers or letters that may be used to designate other options or identify individual units in multiple unit orders

MTX2® NEMA 3R ASD

4160 VAC Output
Pricing & Dimensions

VAC	HP	FLA	Model Number	Frame	H	W	D	List Price	Estimated Shipping Weight (lbs.)
4160V	500	62	MX45AN44050AAA	MTX2-15	107	110	72	$675,000	16000
4160V	1000	124	MX45AN44100AAA	MTX2-15	107	110	72	$700,000	16000
4160V	1250	155	MX45AN44125AAA	MTX2-15	107	110	72	$725,000	16000
4160V	1500	186	MX45AN44150AAA	MTX2-15	107	110	72	$760,000	16000
4160V	3500	434	CF	MTX2-60	110	386	72	CF	CF
4160V	4000	496	CF	MTX2-60	110	386	72	CF	CF
4160V	4500	558	CF	MTX2-60	110	386	72	CF	CF
4160V	5000	620	CF	MTX2-60	110	386	72	CF	CF
4160V	5500	682	CF	MTX2-60	110	386	72	CF	CF
4160V	6000	744*	CF	MTX2-60	110	386	72	CF	CF

Notes:
- HP rating is based on a typical 4-pole motor.
- Always use motor FLA rating to size drives.
- CF = Consult Factory.
- Model numbers with an asterisk have a 110% OL rating.

MTX2® NEMA 3R ASD

Option Information & Pricing

DVDT Output Filters

A DV/DT output filter is recommended for lead-length from 1,000 ft. to 2,000 ft.

Option Code	Frame	Description	Price
13th Digit B	4160 V		
	MTX2-15	Output DV/DT Filter	$17,250
	MTX2-60		CF

Sinewave Output Filters

A sinewave output filter is recommended for lead-lengths of 2,000 ft. to 6 miles. Sinewave output filters are recommended in applications where a step-up transformer is used on the output of the drive.

Option Code	Size	Description	Price
13th Digit E	500 HP	Sinewave output filter	$38,000
	1000 HP		$38,500
	1250/ 1500 HP		$39,000

Push Buttons

Option Code	Description	Price
PBI	IEC Style	$300
PBN	NEMA Style	$450

Communication Interface

Option Code	Description	Price
C5	TOSLINE-S20LP Communication Card with FC Connector (Tosline-S20 with F07 Connector Included on Control Board)	$2,533
CD	DeviceNet Communication Card	$3,833
CF	Profibus Communication Card	$4,255
CR	Modbus RTU/ModBus TCP IP/Ethernet Communication Card	$3,200
CE	Ethernet Global Data (EGD) Communication Card	$4,000
CN	TCNET Communication Card	$4,000

MTX2® NEMA 3R ASD
Option Information & Pricing

Pilot Lights

Option Code	Description	Price
LED	LED full voltage indicating light	$450
Push to Test	Push to Test LED full voltage indicating light	$650

Power Module Lifting Attachment MTX2-15

Description	Part Number	Price
Power Module Overhead Lift Attachment	GCI6825G055	$14,000

Weather Protection Walk-in Enclosure MTX2-60

Outdoor enclosure option provides weather protection for maintenance personnel when accessing the control section and power modules.

Description	Dimensions	Price	Weight
MTX2-60 walk-in enclosure	96”H x 174”W x 50”D	CF	2300

MTX2® NEMA 3R ASD

Spare Parts

Item	Quantity		Description	Part Number
1	1		Control Board	PC61910P200C
2	1		GSD Board	PC61910P203A
3	1		XIO Board	PC61910P201B
4	1		EXIO Board	PC61910P205B
5	1		Interface Board	HP - Specific
6	1		External Interface Board	PC61910P206A
7	1		Keypad Interface Board	PC61910P204A
8	1		Display/Keypad	PC61910P216
9	1		Power Supply	GCI6720G282
10	1		GDI Board	PC61910P085A
11	1		PDM Board	PC61910P107A
9	1		Fan	HP - Specific
11	4		CPT Fuse - 2E 4.8kV	PC16109P902
12	3		Input Fuse	HP - Specific
13	6		Rectifier Fuse	HP - Specific
14	1		Control Power Fuse	PC26163P050
15	1		Space Heater Fuse	PC26143P625
16	1		Space Heater Fuse	PC26130P029
17	1		Power Module (One Phase)**	HP - Specific

**Only included in kits designated with -1

Part Number	Price Without PM	Frame	Part Number	Price WithPM
SPK-MX45AN44050 to SPK-MX45AN44150	$26,100	MTX2-15	SPK-MX45AN44050-1 to SPK-MX45AN44150-1	$98,500
SPK-MX44AN44350 to SPK-MX45AN44600	$80,100	MTX2-60	SPK-MX44AN44350-1 to SPK-MX45AN44600-1	$209,450

MTX® NEMA 3R ASD
Specifications

The MTX® NEMA 3R outdoor medium voltage adjustable speed drive features an advanced enclosure design and power section topology. The MTX® is the world's first drive specifically designed for outdoor mounting in remote applications or applications where a building does not exist. From the jungle to the desert, the MTX® can be installed virtually anywhere, eliminating the need to find suitable indoor floor space.

Product Scope

4160 V at 500 to 3000 HP

Highlights

- Outdoor Enclosure Design
- Three Cables In, Three Cables Out
- Distribution-Quality Lightning Arrestors as Standard
- 36-Pulse Harmonic Cancellation Complies with IEEE-519 2014
- Higher True Factor (>0.96) than Running Motors Across-the-Line
- Provides Easy Monitoring & Maintenance through Advanced User Interface Design
- UL-Rated Rainproof (NEMA 3R) Enclosure
- Lowers Cost of Ownership from Rated Full-Load Operation at -20° to 50°C
- Allows for Standard Motors to be Used in Conjunction with Drive Without Special Motor Insulation

Standard Features

- 100% Continuous Overload Rating, 115% for 60 Seconds
- NEMA 3R Enclosure
- Seven Discrete Digital Input Terminals with Programmable Functions
- Five Available Digital Programmable Outputs
- Two Analog Inputs; Isolation Transducer Required
- Eight Analog Outputs; Isolation Transducer Required
- Medium Voltage IGBT Technology
- EOI: Plain-English LCD Display
- Ambient Temperature: -4° to 122°F (-20° to 50°C)
- Altitude: Up to 1000 Meters without Derate (4500 Meter Option Available)
- Humidity: 95% No Condensation; 100% when Heaters Energized
- Standards & Compliances: NEC, NEMA, UL Listed in US & Canada, ANSI

MTX® NEMA 3R ASD

Part Numbering Convention

The MTX® can be configured with commonly-used options for an easy-to-install, turn-key package. See the chart below for available configurations. Custom packages are available upon request. Drawings supplied by Toshiba's MV Drives Department.

The example below, MX40AN44050AAACR, shows a standard duty MTX®, 500 HP, 4160 V input, 4160 V output with input disconnect, cooling fan power, and Modbus RTU/Modbus TCP IP/Ethernet communication card.

Example Part Number:	MX4	0	A	N	4	4	050	A	A	A	xxx

Series:
MX4 -- MV2 Outdoor

Frame type:
0 -- MTX-15 (Convection w fixed modules)
2 -- MTX-30 (Convection w fixed modules)

Input Frequency:
A -- 60 Hz
B -- 50 Hz

Type:
N -- For non regen drives
R -- Regen Module Drives

Input Voltage:

2 -- 2400	D -- 11000
4 -- 4160	F -- 12400
6 -- 6600	H --13800

Output Voltage:
4 -- 4160

Output Rated Capacity:

050 --500 HP	200 -- 2000 HP
100 -- 1000 HP	250 -- 2500 HP
150 -- 1500 HP	300 -- 3000 HP

Configuration:

	ID:	CP:	BYP:
A --	Yes	Yes	No
B --	Yes	No	No
C --	No	Yes	No
D --	No	No	No

ID -- Input Disconnect
CP -- Internal Cooling Fan Power

Output Options:

A -- Standard reactor	E -- Sinewave Filter
D --Transfer	F -- Sinwave Filter and Transfer

Enclosure Options:
A -- Standard paint
B -- Stainless steel

Additional Options:
Additional numbers or letters that may be used to designate other options or identify individual units in multiple unit orders

MTX® NEMA 3R ASD

4160 VAC Output
Pricing & Dimensions

HP	FLA	Model Number	H	W	D	H	W	D	List Price	Estimated Shipping Weight (lbs.)
			Drive Dimensions			Bypass Dimensions				
Without Bypass										
500	62	MX40AN44050AAA	107	168	63				$512,000	15000
1000	124	MX40AN44100AAA	107	168	63				$540,000	15000
1500	186	MX40AN44150AAA	107	168	63				$584,000	15000
2000	248	MX42AN44200AAA	111	238	70				$1,015,580	24500
2500	310	MX42AN44250AAA	111	238	70				$1,071,000	24500
3000	372	MX42AN44300AAA	111	238	70				$1,113,000	24500
With Manual Bypass (Not Close Coupled)										
500	62	MX40AN44050EAA	107	225	63	101	129	44	$630,900	22600
1000	124	MX40AN44100EAA	107	225	63	101	129	44	$658,900	22600
1500	186	MX40AN44150EAA	107	225	63	101	129	44	$704,600	22600
2000	248	MX42AN44200EAA	CF	CF	CF	101	129	44	$1,137,120	32100
2500	310	MX42AN44250EAA	CF	CF	CF	101	129	44	$1,193,500	32100
3000	372	MX42AN44300EAA	CF	CF	CF	CF	CF	CF	CF	CF

Notes:
- External cable not included for bypass.
- HP rating is based on a typical 4-pole motor.
- Always use motor FLA rating to size drives.
- Bypass Starter pricing is based on fixed contactors (not rack-out type).
- Toshiba standard RX5 overload relay is included. RTD monitoring not included. Select motor protection relay option to replace RX5 relay.
- CF = Consult Factory.

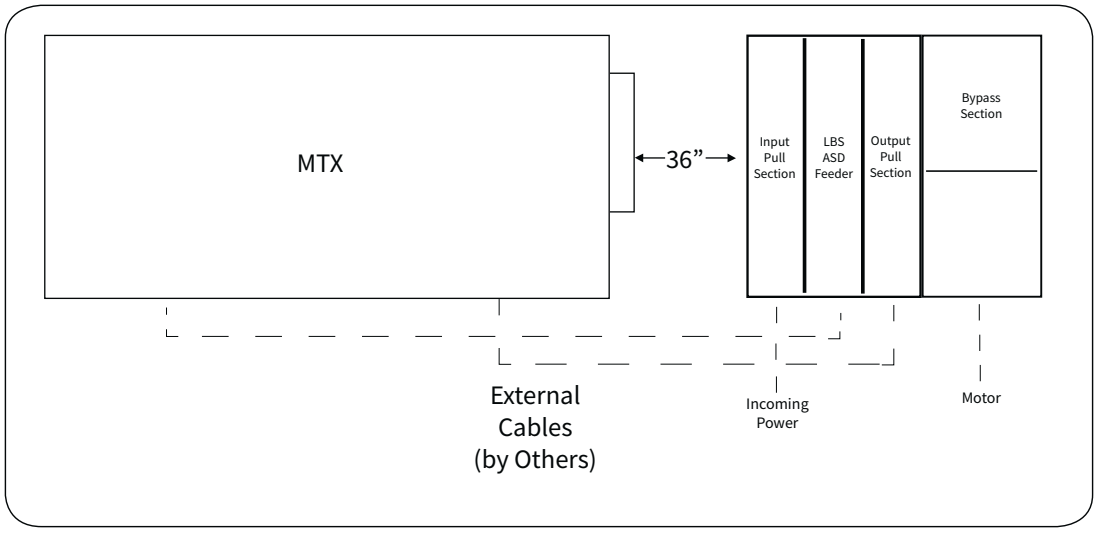

Notes:
- Clearance is needed to the right for side-mounted heat exchanger.
- No clearance is needed when mounted on the left hand side.
- External cables interconnecting two sections are not included and need to be provided by others.
- Drive and bypass lineup is not close coupled.
- Up to 2500 HP: Bypass lineup consists of incoming pull section, LBS VFD feeder, output pull section and bypass section.
- For more than one motor bypass consult factory.
- Above 2500 HP: Bypass lineup - consult factory.

MTX® NEMA 3R ASD
Option Information & Pricing

Sync-Xfer

Sync-Xfer is a technological feature of the MTX drives. With sync-xfer function, the drive can synchronize with the utility supply and transfer the motor operating on ASD in variable speed mode to utility power for fixed speed operation. This is a close-couple transition using bypass section consisting of bypass and drive output contactors. Additionally, the motor operating in fixed speed mode can be captured from utility power and transferred to ASD for variable speed operation.

Sync-Xfer can have a significant impact in lowering a system cost in applications where multiple motors are controlled with one ASD and/or one ASD is used for soft starting the motors one at a time.

Sync-Xfer applications require sync ready drive with following options added to standard ASD pricing:

	Item	Description
1	Sync Ready Kit, Includes Sync Reactor, One Output PT and Sync Check Relay	Use Price Book to Select the Sync Ready Kit Price Based on Frame Size.
2	Bypass Section w/ Feedback CTs	Use Price Book to Select the Bypass Lineup for One Motor.
3	Motor Protection Relay	Use Price Book to Select the Motor Protection Relay for Each Motor/Additional Motors.
4	Selection Logic with PLC	Required for Complex Sync Transfer Applications. Consult factory.
5	Customer-Supplied MCC	Consult factory.

Option Code	Description	Price
SX	Sync Ready Kit (500 to 1500 HP) One per Drive	$19,500
	Bypass Lineup for One Motor (500 to 2500 HP)	$124,500
	Sync Ready Kit (2000 to 3000 HP) One per Drive	$24,480
	Bypass Lineup for One Motor with Feedback CTs (Above 2500 HP)	CF

Notes:
- Field interconnecting cable not included for bypass.
- CF = Consult Factory.
- MTX drive with one motor sync transfer- price per above guideline.
- For all other applications, consult factory.

MTX® NEMA 3R ASD

Option Information & Pricing

6.9 To 13.8 kV Input

The HV Input option gives users the ability to input 6.9 to 13.8 kV primary voltages directly to the drive transformer. This option pricing is available only as a price adder to the standard unit. Published standard dimensions will increase 74” on width based on the selection of HV equipment.

- 74” section includes fused input disconnect switch, input contactor, soft charge circuit, and PTs. This arrangement mimics the standard -AA drive but with HV input.
- Option price = drive price x 110% + $97,800.
- Add 74" to MTX-15 and 98" to MTX-30 drive dimensions.

Notes:
- UL/cUL in progress.
- No bypass is available with this feature.
- The price of the drive will increase by 10% to accommodate the HV windings.

HP	Description	Price
500 to 3000	Up to 15 kV Input Includes: Fused Input Disconnect, Input Breaker, Soft Charge Circuit, PTs (add 74” to Width)	$97,800

Example 1: 500 HP, 13.8 kV input with 4160 V output. Use the 500 HP price of $512,000 plus 10% = $563,000 and add the 74” section at $97,800. Total list price equals $661,000. Overall dimension will be 242” (168” + 74”). Part number will be MX40ANH4050AAA0.

MTX® NEMA 3R ASD
Option Information & Pricing

DV/DT Output Filter

A DV/DT output filter is recommended for lead-length between 1000 ft. to 2000 ft.

Option Code	Rating	Description	Price
13th Digit B thru C	500	Output DV/DT Filter	$11,500
	1000		$11,500
	1500		$11,500
	2000		$14,000
	2500		$14,000
	3000		$14,000

Sinewave Output Filters

A sinewave output filter is recommended for lead-lengths of 2000 ft. to 6 miles. Sinewave output filters are recommended in applications where a step-up transformer is used on the output of the drive.

Option Code	Rating	Description	Price
12th DigitE	500	Output Sinewave Filter	$32,500
	1000		$33,000
	1500		$33,500
	2000	Additional cabinet required for sinewave filter	$98,000
	2500		$99,000
	3000		$100,000

Drive Motor Space Heater

Option Code	HP Range	Description	Price
EDH	MTX15	Internally powered space heaters	$2,200
	MTX30	External 240V power supplied by customer	$3,200
EMH1	Power provided seperately	Basic space heater control circuit to turn one space heater ON (up to 10 amps) when the drive is not operating. External 120V or 240V supplied by customer. For special requirements, consult factory	$2,200

Notes:
- Contact Factory for Extreme Weather Space Heater Pricing. Extreme Heater Package Requires External 240 V Power.

MTX® NEMA 3R ASD
Option Information & Pricing

Pilot Light

Option Code	Description	Price
LED	LED full voltage indicating light	$450
Push to Test	Push to Test LED full voltage indicating light	$650

Push-Buttons

Option Code	Description	Price
PBI	IEC Style	$300
PBN	NEMA style	$450

Communication Interface

Option Code	Description	Price
C5	TOSLINE-S20LP Communication Card with FC Connector (Tosline-S20 with F07 Connector Included on Control Board)	$2,533
CD	DeviceNet Communication Card	$3,833
CF	Profibus Communication Card	$4,255
CR	Modbus RTU/ModBus TCP IP/Ethernet Communication Card	$3,200
CE	Ethernet Global Data (EGD) Communication Card	$4,000
CN	TCNET Communication Card	$4,000

Notes:
- See T300MV2 Option section for complete list of optional features.

MTX® NEMA 3R ASD

Spare Part Kits

Toshiba recommends a separate line item on the purchase order for spare parts on the drives purchase order. Spare parts are handled by the spare parts group. Spare Parts Kits provide an easy and practical way to acquire the proper spare parts to handle most emergencies. Spare Parts Kits contain one of each circuit board, one low voltage power supply, rectifier fuses, diodes, and one set of control power fuses.

To order a Spare Parts Kit, please use the following numbering convention:

Example Part Number:	SPK-MTX	A	4	4	050

Series:
MTX®

Input Frequency:
A — 60 Hz
B — 50 Hz

Input Voltage:
2 — 2400
3 — 3300
4 — 4160

Output Voltage:
4 — 4160

4160V Output:
050 — 500 HP
100 — 1000 HP
150 — 1500 HP
200 — 2000 HP
250 — 2500 HP
300 — 3000 HP

MTX® NEMA 3R ASD

Spare Part Kits

Item	Quantity (500-1500hp)	Quantity (2000-3000hp)	Description	Part Number
1	1	1	Control Board	PC61910P200C
2	1	1	GSD Board	PC61910P203A
3	1	1	XIO Board	PC61910P201B
4	1	1	EXIO Board	PC61910P205B
5	1	1	Interface Board	HP - Specific
6	1	1	External Interface Board	PC61910P206A
7	1	1	Keypad Interface Board	PC61910P204A
8	1	1	Display/Keypad	PC61910P216
9	1	1	Power Supply	GCI6720G282
10	1	1	GDI Board	PC61910P085A
11	1	1	PDM Board	PC61910P107A
9	1	1	Fan	HP - Specific
10	1	N/A	Fan Starting Cap	PC42000P412
11	4	4	CPT Fuse - 2E 4.8kV	PC16109P902
12	3	3	Input Fuse	HP - Specific
13	6	6	Rectifier Fuse	HP - Specific
14	1	N/A	Control Power Fuse	PC26163P150
15	1	1	Control Power Fuse	PC26163P050
16	1	1	Space Heater Fuse	HP - Specific
17	2	4	Diode Pack	PC40333P402
18	6	N/A	Rectifier	PC40365P200
19	N/A	6	Rectifier	PC40365P400
20	8	16	PM IGBT	PC40233P406
21	2	4	PM Fuse	PC16109P901
22	1	2	PM PWR Supply Board	PC43000P015
23	1	2	PM OLB Board	PC61910P073C
24	1	2	PM VDET Board	PC61910P134A
25	4	8	PM RGM Board	PC61910P106A
26	1	2	PM CHG DET Board	PC61910P110A
27	2	4	PM Gate Driver Board	PC61910P077G
28	2	4	PM Gate Driver Board	PC61910P077H

Part Number	Frame	Price
SPK-MX40AN44050-1 to SPK-MX40AN44150-1	MTX-15	$74,780
SPK-MX42AN44200-1 to SPK-MX42AN44300-1	MTX-30	$121,500

BMV2 ASD
Specifications

The BMV2 indoor medium voltage adjustable speed drive is a cost-effective solution with the latest MV2 control platform and efficiency. Aluminum magnetics are paired with an advanced enclosure design and power section topology. The BMV2 is available with an optional input controller that includes an isolation switch, input fuses and vacuum contactor, making the BMV2 an economical solution for many industrial and commercial applications.

Product Scope
4160 V at 300 to 2000 HP

Highlights

- Aluminum Transformer and Magnetics
- Distribution-Quality Lightning Arrestors as Standard
- 24-Pulse Harmonic Cancellation Complies with IEEE-519 2014
- Higher True Factor (>0.96) than Running Motors Across-the-Line
- Provides Easy Monitoring & Maintenance through Advanced User Interface Design
- Removable Power Modules
- Allows for Standard Motors to be Used in Conjunction with Drive Without Special Motor Insulation

Standard Features

- Overload Rating, 115% for 60 Seconds (Some Ratings with 110% Overload)
- NEMA 1 Ventilated Enclosure with Gasket & Air Intake Filters with IP20 Degree of Protection
- Four Programmable Digital Inputs
- Four Programmable Digital Outputs
- One Analog Input
- One Analog Output
- Medium Voltage IGBT Technology
- EOI: Plain-English LCD/LED Display
- Ambient Temperature: 32° to 104°F (0° to 40°C)
- Altitude: Up to 1000 Meters
- Humidity: 95% Non-Condensing
- Motor Cable Length 1000 ft. Without Output Filter
- Standards & Compliances: NEC, NEMA, UL Listed in US & Canada, ANSI

BMV2 ASD

Part Numbering Convention

The BMV2 can be configured with commonly-used options for an easy-to-install, turn-key package. See the chart below for available configurations. Custom packages are available upon request. Drawings supplied by Toshiba's MV Drives Department.

Example Part Number:	MB4	A	A	N	4	4	070	A	A	A	0	xx

Series:
BM4 - BMV2

Frame Type:
A - Frame A
B - Frame B

Input Frequency:
A - 60 Hz

Type:
N - For Non-Regen Drives

Input Voltage:
4 - 4160

Output Voltage:
4 - 4160

Output Rated Capacity:
070 - 700 HP
080 - 800 HP
090 - 900 HP
100 - 1000 HP
125 - 1250 HP
150 - 1500 HP
175 - 1750 HP
200 - 2000 HP

Configuration:

	ID:	CP:
A --	Yes	Yes
B --	Yes	No
C --	No	Yes
D --	No	No

ID - Input Disconnect
CP - Internal Cooling Fan Power

Output Options:
A - Standard Reactor
B - dV/dt Filter

Cooling Options:
A - Standard

Main Input Bus:
0 - None

Additional Options:
Additional numbers or letters that may be used to designate other options or identify individual units in multiple unit orders

BMV2 ASD

BMV2 - 4160 VAC Output
Pricing & Dimensions

VAC	HP	FLA	Model Number	Frame	H	W	D	List Price	Estimated Shipping Weight (lbs.)
					Dimensions (in.)				
Without Input Controller									
4160V	300	37	MB4AAN44030CAA0	A4µ	103.7	48	48	$270,312	5200
4160V	400	50	MB4AAN44040CAA0	A4µ	103.7	48	48	$281,017	5600
4160V	500	62	MB4AAN44050CAA0	A4µ	103.7	48	48	$286,341	6000
4160V	600	74	MB4AAN44060CAA0	A4µ	103.7	48	48	$290,852	6200
4160V	700	87	MB4ASAN44070CAA0	AS4	103.7	55	48	$290,547	6000
4160V	800	99	MB4ASAN44080CAA0	AS4	103.7	55	48	$295,153	6300
4160V	900	112	MB4ASAN44090CAA0	AS4	103.7	55	48	$302,522	6500
4160V	1000*	124	MB4ASAN44100CAA0	AS4	103.7	55	48	$310,119	6700
4160V	700	87	MB4AAN44070CAA0	A4	103.7	60	48	$285,547	6000
4160V	800	99	MB4AAN44080CAA0	A4	103.7	60	48	$290,153	6400
4160V	900	112	MB4AAN44090CAA0	A4	103.7	60	48	$297,522	6500
4160V	1000*	124	MB4AAN44100CAA0	A4	103.7	60	48	$305,119	6700
4160V	1000	124	MB4BSAN44100CAA0	BS4	103.7	85	48	$365,000	10500
4160V	1250	155	MB4BSAN44125CAA0	BS4	103.7	85	48	$368,409	11000
4160V	1500	186	MB4BSAN44150CAA0	BS4	103.7	85	48	$383,580	11500
4160V	1750	217	MB4BSAN44175CAA0	BS4	103.7	85	48	$386,344	12000
4160V	2000*	248	MB4BSAN44200CAA0	BS4	103.7	85	48	$394,634	12500
4160V	1250	155	MB4BAN44125CAA0	B4	103.7	90	48	$363,409	11300
4160V	1500	186	MB4BAN44150CAA0	B4	103.7	90	48	$378,580	11700
4160V	1750	217	MB4BAN44175CAA0	B4	103.7	90	48	$381,344	12100
4160V	2000*	248	MB4BAN44200CAA0	B4	103.7	90	48	$389,634	12500
With Input Controller									
4160V	300	37	MB4AAN44030AAA0	A4µ	103.7	48	48	$284,462	5200
4160V	400	50	MB4AAN44040AAA0	A4µ	103.7	48	48	$295,417	5600
4160V	500	62	MB4AAN44050AAA0	A4µ	103.7	48	48	$300,841	6000
4160V	600	74	MB4AAN44060AAA0	A4µ	103.7	48	48	$305,502	6200
4160V	700	87	MB4AAN44070AAA0	A4	103.7	60	48	$300,147	6900
4160V	800	99	MB4AAN44080AAA0	A4	103.7	60	48	$304,953	7000
4160V	900	112	MB4AAN44090AAA0	A4	103.7	60	48	$312,722	7200
4160V	1000*	124	MB4AAN44100AAA0	A4	103.7	60	48	$320,349	7400
4160V	1250	155	MB4BAN44125AAA0	B4	103.7	90	48	$379,509	11300
4160V	1500	186	MB4BAN44150AAA0	B4	103.7	90	48	$394,680	11700
4160V	1750	217	MB4BAN44175AAA0	B4	103.7	90	48	$397,544	12100
4160V	2000*	248	MB4BAN44200AAA0	B4	103.7	90	48	$405,934	12500

Notes:
- HP rating is based on a typical 4-pole motor.
- Always use motor FLA rating to size drives.
- CF = Consult Factory.
- (*) Model numbers with asterisk have 110% OL rating.

BMV2 ASD
Option Information & Pricing

DV/DT Output Filters

A DV/DT output filter is recommended for lead-lengths of 1000 feet to 2000 feet (Not Available for Frame AS4/BS4)

Option Code	Size	Description	Price
13th Digit B	4160 V		
	Frame A4µ/A4	Output DV/DT Filter	$16,550
	Frame B4		$18,475

Drive & Motor Space Heater

Option Code	HP Range	Description	Price
EDH	Frame A4µ/ A4	Drive Space Heater 208/240 VAC. External power required.	$2,200
	Frame AS4		$3,200
	Frame B4		$4,000
	Frame BS4		$3,200
EHM1	Power provided Seoperately	Basic motor space heater circuit to turn Space Heaters ON (up to 10 amps) when drive is not operating. External 120/240 VAC supplied by customer.	$2,200

Communication Interface

Option Code	Description	Price
C5	TOSLINE-S20LP Communication Card with FC Connector (Tosline-S20 with F07 connector included on control board)	$2,533
CD	DeviceNet Communication Card	$3,833
CF	Profibus Communication Card	$4,255
CR	Modbus RTU/ModBus TCP IP/Ethernet Communication Card	$3,200
CE	Ethernet Global Data (EGD) Communication Card	$4,000
CN	TCNET Communication Card	$4,000

BMV2 ASD

Option Information & Pricing

Spare Parts

Item	4160 V Qty.	Description	Part Number
1	1	Control Board	PC61910P200C
2	1	GSD Board	PC61910P203A
3	1	XIO Board	PC61910P201B
4	1	EXIO Board	PC61910P205B
5	1	Interface Board	HP-Specific
6	1	External Interface Board	PC61910P206A
7	1	Keypad Interface Board	PC61910P204A
8	1	Display/Keypad	PC61910P216
9	1	Power Supply	GCI6720G282
10	1	GDI Board	PC61910P085A
11	1	PDM Board	PC61910P107A
12	2	Control Power Fuse	HP-Specific
13	3	Input Fuse	HP-Specific
14	4	CPT Fuse	PC16109P902
15	4	Rectifier Fuse	HP-Specific
16	4	Diode Pack	HP-Specific
17	1	Power Module (One Phase)*	HP-Specific
18	1	Cooling Fan	HP-Specific

*Only included in kits designated with -1

Part Number w/o PM, with Std Fan	List Price	Frame	Part Number & Std Fan	List Price
SPK-MB4AAN44030A to SPK-MB4AAN44060A	$29,240	A4µ	SPK-MB4AAN44030A-1 to SPK-MB4AAN44060A-1	$57,730
SPK-MB4AAN44070A to SPK-MB4AAN44100A	$32,270	A4	SPK-MB4AAN44070A-1 to SPK-MB4AAN44100A-1	$58,150
SPK-MB4BAN44125A to SPK-MB4BAN44200A	$34,570	B4	SPK-MB4BAN44125A-1 to SPK-MB4BAN44200A-1	$76,220

Regen ASD
Specifications

The Regen medium voltage adjustable speed drive is a 100% regenerative drive that can be configured with commonly-used options for an easy-to-install, turn-key package. The standard T300MV2® adjustable speed drive is only capable of two quadrant operation. When the T300MV2 is configured with the Regen module, it is equipped with an active front end and is capable of four quadrant operation. Consult the factory for technical details.

Please note: Existing T300MV2 drives cannot be retrofitted to add the regenerative capability.

Product Scope

3300, 4160, or 6600 V at 300 to 6000 HP

Highlights

- 100% Regeneration
- Three Cables In, Three Cables Out
- Isolation Transformer
- Multi-Level PWM Output
- Five-Cycle Ride Through
- Auto-Restart
- Higher True Factor (0.99)
- Small Footprint Through Compact Power Modules, Standard Copper-Wound Isolation Transformer, & Air-Cooling System
- Advanced Electronics to Reduce Component Count

Standard Features

- 100% Continuous Overload Rating, 115%* for 60 Seconds
- NEMA 1 Ventilated & IP20 Gasket & Filter Enclosure
- Seven Digital Input Terminals with Programmable Functions. Interposing Relay may be Required.
- Five Digital Outputs: Interposing Relay may be Required
- Two Analog Inputs : Isolation Transducer Required
- Eight Analog Outputs: Isolation Transducer Required
- EOI: Plain-English LCD Display
- Standards & Compliances: IEC, NEMA, & ANSI

Notes:

*Some drive ratings are limited to 110% overload for 60 seconds.

Regen ASD

Part Numbering Convention

The Regen can be configured with commonly-used options for an easy-to-install, turn-key package. See the chart below for available configurations. Custom packages are available upon request. The Regen includes a ground lug and customer terminal block. Drawings supplied by Toshiba's MV Drive Department. The example, M32AR44050SAA-CR, shows a standard duty Regen, 500 HP, 4160 V input, 4160 V output with Input disconnect, cooling fan power, and Modbus RTU/Modbus TCP IP/Ethernet communication card.

Example Part Number:	M32	A	X	4	4	050	S	AA/AE	HS

Series:
M32 — Regeneration

Input Frequency:
A — 60 Hz
B — 50 Hz

Type:
R — for Regen Module Drives

Input Voltage:

2 - 2400	6 - 6600	F - 12470
3 - 3300	C - 6900	G - 13200
4 - 4160	D - 8320	H - 13800
A - 4800	E - 12000	Z - OTHER

Output Voltage:
4 — 4160

Output Rated Capacity

030 - 300 HP	10E - 1000 HP	300 - 3000 HP
040 - 400 HP	125 - 1250 HP	350 - 3500 HP
050 - 500 HP	150 - 1500 HP	400 - 4000 HP
060 - 600 HP	175 - 1750 HP	450 - 4500 HP
070 - 700 HP	200 - 2000 HP	500 - 5000 HP
080 - 800 HP	225 - 2250 HP	550 - 5500 HP
090 - 900 HP	250 - 2500 HP	600 - 6000 HP

Duty Rating:
S — Standard (115% OL rating)

Configuration:	ID:	CP:	BYP:
AA -	X	X	
AB -	X		
AC -		X	
AD -			
AE -		X	X
AF -	X		X
AG -	X	X	X
AH -			X

ID — Input Disconnect
CP — Cooling Fan Power
BYP — Isolated Across-the-Line Starter

Additional Function:
- Options should be entered in alphabetical order.
- If the smart part number is longer than two options, replace all options with a "-1."
- List all options with descriptions for ease of understanding.

Notes:
- 1000, 2000, and 6000 HP has 110% OL rating.

Regen ASD

4160 VAC Output
Pricing & Dimensions

HP	FLA	Model Number	Frame	H	W	D	List Price	Estimated Shipping Weight (lbs.)
w/o Bypass								
300	37	M32AR44030AA	A4R	104	96	48	$383,000.00	11500
400	50	M32AR44040AA	A4R	104	96	48	$413,000.00	11500
500	62	M32AR44050AA	A4R	104	96	48	$420,000.00	11500
600	74	M32AR44060AA	A4R	104	96	48	$420,000.00	11500
700	87	M32AR44070AA	A4R	104	96	48	$424,000.00	11500
800	99	M32AR44080AA	A4R	104	96	48	$425,000.00	11500
900	112	M32AR44090AA	A4R	104	96	48	$452,000.00	11500
1000*	124	M32AR4410EAA	A4R	104	96	48	$459,000.00	11500
1250	155	M32AR44125AA	B4R	104	176	CF	$506,000.00	17000
1500	186	M32AR44150AA	B4R	104	176	CF	$576,000.00	17000
1750	217	M32AR44175AA	B4R	104	176	CF	$579,000.00	17000
2000*	248	M32AR44200AA	B4R	104	176	CF	$592,000.00	17000
2250	279	M32AR44225AA	C4R	104	234	CF	$792,000.00	24000
2500	310	M32AR44250AA	C4R	104	234	CF	$803,000.00	24000
3000	372	M32AR44300AA	C4R	104	265	CF	$989,000.00	30000
4000	496	M32AR44400AA	F4R	104	305	CF	$1,240,000.00	44000
4500	558	M32AR44450AA	F4R	104	305	CF	$1,260,000.00	44000
5000	620	M32AR44500AA	F4R	104	305	CF	$1,280,000.00	44000
5500	682	M32AR44550AA	F4R	104	305	CF	$1,300,000.00	44000
6000*	720	M32AR44600AA	F4R	104	305	CF	$1,330,000.00	44000
6000	744	M32AR44600AA	F4R	104	305	CF	$1,300,000.00	44000
w/ Bypass								
300	37	M32AR44030AE	A4R	104	126	48	$431,000.00	12600
400	50	M32AR44040AE	A4R	104	126	48	$461,000.00	12600
500	62	M32AR44050AE	A4R	104	126	48	$468,000.00	12600
600	74	M32AR44060AE	A4R	104	126	48	$468,000.00	12600
700	87	M32AR44070AE	A4R	104	126	48	$472,000.00	12600
800	99	M32AR44080AE	A4R	104	126	48	$473,000.00	12600
900	112	M32AR44090AE	A4R	104	126	48	$500,000.00	12600
1000*	124	M32AR4410EAE	A4R	104	126	48	$507,000.00	12600
1250	155	M32AR44125AE	B4R	104	CF	CF	$554,000.00	CF
1500	186	M32AR44150AE	B4R	104	CF	CF	$624,000.00	CF
1750	217	M32AR44175AE	B4R	104	CF	CF	$627,000.00	CF
2000*	248	M32AR44200AE	B4R	104	CF	CF	$640,000.00	CF
2250	279	M32AR44225AE	C4R	104	CF	CF	$840,000.00	CF
2500	310	M32AR44250AE	C4R	104	CF	CF	$851,000.00	CF
3000	372	M32AR44300AE	C4R	104	CF	CF	$1,058,000.00	CF
4000	496	M32AR44400AE	F4R	104	CF	CF	$1,309,000.00	CF
4500	558	M32AR44450AE	F4R	104	CF	CF	$1,329,000.00	CF
5000	620	M32AR44500AE	F4R	104	CF	CF	$1,349,000.00	CF
5500	682	M32AR44550AE	F4R	104	CF	CF	$1,369,000.00	CF
6000*	720	M32AR44600AE	F4R	104	CF	CF	$1,399,000.00	CF

Notes:
- Consult factory for update on UL status.
- HP rating is based on typical 4-pole motor. Always use motor FLA rating to size drives. Consult factory for pricing.
- Bypass Starter pricing is based on fixed contactors (not rack-out type).
- Dimensions are estimates only, please consult factory.
- (*) Model numbers with asterisk have 110% OL rating.
- CF = Consult Factory.

Appendices

Appendix A
Pricing & Delivery

Pricing Information

- List pricing is subject to change at any time.
- All dimensions and weights are approximate and subject to change without notice.
- Contact the appropriate department for “CF” (consult factory) items.
- Contact the appropriate TIC representative for multipliers, pricing on special features, or options not listed in this guide.
- All options may not work in conjunction with one another. Contact the appropriate department for compatibility.
- Unless otherwise specified, all offered ASDs are three-phase input, three-phase output, single-phase input, three-phase output are available as option.
- See each device’s Part Numbering Convention section for the required ordering information.
- Please see Toshiba’s Terms and Conditions at https://www.toshiba.com/tic/cms_files/TCofSale.pdf

Delivery

We offer engineered product options that can be ordered in a variety of configurations. The combination compatibility between different options can further impact delivery lead times.

Included in this price book are delivery guidelines that can be used to assist in determining the typical delivery of a standard or engineered product. Any item in stock is subject to prior sale. Please check with customer service for availability delivery schedules.

Appendix B
Warranty Information

Extended Warranty — Motor/Drive Packages

Extended warranties are available on motor-drive packages. When a purchase order is submitted for a motor-drive package to Toshiba, the drive warranty will be extended to match the motor warranty for up to three years on parts labor with the Motor-Drive Package Extended Warranty Request Form. For motor-drive packages shipped from distributor stock, the distributor must submit this request form to the Drives/Motor department. Please request extended storage procedure beyond 24 months.

Extended Warranty — Motor/Starter (PAC) Packages

Extended warranties are also available on Toshiba motor-starter packages. When a purchase order is submitted for a motor-starter package to Toshiba, the Solid State Starter warranty will be extended to match the motor warranty for up to three years on parts labor when the Motor-Starter Package Extended Warranty Request Form is included. This extended warranty includes the following PAC products: TE2, TE-H, TE-B. For motor-starter packages shipped from distributor stock, the distributor must submit this request form to the PAC/Motor Marketing department.

Extended Warranty — Adders

Extended warranties are also available from Toshiba as adders. The extended warranty must be on the same purchase order with the covered equipment. The adders are listed below:

Two-Year Warranty		Three-Year Warranty		Four-Year Warranty		Five-Year Warranty	
Parts Only	1.5%	Parts Only	4.0%	Parts Only	7.5%	Parts Only	15.0%
Parts & Labor	3.0%	Parts & Labor	8.0%	Parts & Labor	15.0%	Parts & Labor	20.0%

Example: If total equipment price is $30,000 and a four-year parts labor warranty is required, multiply $30,000 by 0.15, which equals $4,500. Added to the original amount, the total order would equal $34,500.

For Toshiba's Standard Terms and Conditions of Sale, please refer to our website at https://www.toshiba.com/tic/cms_files/TCofSale.pdf for more details.

Appendix C
Drawing Requests

Drawing Requests

Approval Drawings

Please include a part number of DWG-APR to request approval drawings on any purchase order to Toshiba. For non-standard parts, a set of drawings will be provided for your approval four to six weeks after acceptance of the purchase order. Standard product drawings will be available immediately for approval. Not all products in this price book are standard.

Equipment manufacturing starts only after receipt of approved drawings with a written request to:

1. Release for manufacture as submitted, or provided there is no impact on technical/commercial conditions.
2. Revise and release as noted.

Reference Drawings

Please include a part number of DWG-REF to request reference drawings on any purchase order to Toshiba. For non-standard parts, a set of drawings will be provided for your reference four to six weeks after receipt of the purchase order. Standard product drawings will be available immediately for reference. Not all products in this price book are standard.

Any changes made to reference drawings are considered a change request which are subject to change fees and may also affect product lead times.

Appendix D
TOSHcare™ Medium Voltage Power Module Reconditioning Service Program

Toshiba International Corporation (TIC) is proud to offer the TOSHcare reconditioning program for medium voltage power modules. The program provides customers with an option to send modules back to the factory for reconditioning at a fixed price, making the program a convenient allocation in maintenance budgets.

The TOSHcare Reconditioning Program* Includes:

- Replacement of Key Circuit Boards and Devices as Applicable
- Full Factory Inspection and Testing (Full Voltage, Full Current, & Overload) of the Modules
- All Reconditioned Modules Include a TOSHcare 1-Year Protection Plan:
  - Protection Plan for Entire Module for One Year from the Factory Ship Date
  - All Parts and Depot Labor on Covered Failures
  - Inspection Fees for Covered or Non-covered Failures during the Plan Period

* Reconditioning does not apply to modules that are damaged or need repairs but can be added as an a-la-carte service.

This service must go through TIC's Repair Authorization process.

To learn more about pricing or for general inquiries, email TIC-TOSHcare@toshiba.com or visit www.toshiba.com/tic/toshcare to submit a reconditioning request form.

2400V Power Modules			
Frame Size	**Model Number**	**Reconditioning Price**	**Part Number**
A2	GCI673AG052	$3,500	
B2	GCI673BG052	$3,500	TOSHMVPCREC-FRA2D2
D2	GCI673DG052	$3,500	
0	GCI6730G050A	$5,700	
1	GCI6731G050A	$5,700	TOSHMVPCREC-FR0B4
C6S	GCI6722G050A2	$5,700	
D6S	GCI6733G050A	$9,750	TOSHMVPCREC-FR26S-A
F6S	GCI673FG050	$9,750	
4	GCI6734G050A	$12,750	TOSHMVPCREC-FR36S-B
4160V Power Modules			
0	GCI6720G050B	$5,700	
1	GCI6721G050B	$5,700	
A4/1	GCI672AG050U	$5,700	TOSHMVPCREC-FR0B4
B4	GCI6721G050B	$5,700	
2	GCI6722G050A	$9,750	
C6S	GCI6722G050A2	$9,750	TOSHMVPCREC-FR26S-A
D6S	GCI6723G050A2	$12,750	
F6S	GCI6724G050A2	$12,750	TOSHMVPCREC-FR36S-B
3	GCI6723G050A1	$12,750	
4	GCI6724G050A1	$12,750	

Notes:
- Prices are subject to change.

Special Testing

Control Logic Witness Testing

- Testing conducted under shop ambient conditions.
- Test has a minimum one week impact on shipping lead times.

Standard Witness Testing for Low Voltage Drives

All Horsepowers	List Price
Standard Witness Testing	$14,000

Standard Witness Testing for Medium Voltage Drives

Sync Transfer	Frames 0 & 1	Frames ≥ 2
YES	$45,000 List	$50,000 List
NO	$35,000 List	$45,000 List

Burn-In Testing (Unwitnessed)

- Burn-in Testing is performed in Toshiba's Control Plant with a reactor load. A shorted reactor at reduced voltage is used to demonstrate the current carrying capacity (Amps) of the ASD.
- Testing conducted under shop ambient conditions.
- Burn-in test capacitiy ≤900 Amps max.

	8 Hr. Burn-In	16 Hr. Burn-In	24 Hr. Burn-In	40 Hr. Burn-In
MV-ASD Burn-In	$7,000 List	$10,000 List	$13,000 List	$22,000 List
LV-ASD Burn-In	$3,000 List	$5,000 List	$7,000 List	$13,000 List

Dynamometer Testing Prices (Witnessed or Unwitnessed)

- Testing conducted under shop ambient conditions.
- Test has a minimum one week impact on shipping lead times. Actual impact dependent upon scope of testing and shop loading at time of testing.
- Test motor will be provided by Toshiba where available. In some cases, a test motor cannot be supplied by Toshiba. In this case, customer will be expected to supply a motor to Toshiba for load.
- Motor-drive string testing is subject to additional motor testing charges.
- Maximum load capability 1,200 HP.

Dynamometer Test Capacities (ASD Ratings)

6,600 V @ 150 Amps max.	690 V @ 900 Amps max.	230 V @ 1,000 Amps max.
4,000 V @ 250 Amps max.	600 V @ 1,250 Amps max.	
2,300 V @ 400 Amps max.	480 V @ 1,750 Amps max.	

Dynamometer Testing for Low Voltage Drives
(Motor Test Lab - Dynamometer Testing NOT TO EXCEED 8 hrs.)

Small	Medium	Large
≤100 HP	125 to 450 HP	≥500 HP
$13,200 List	$22,000 List	$27,000 List

Dynamometer Testing for Medium Voltage Drives
(Motor Test Lab - Dynamometer Testing NOT TO EXCEED 8 hrs.)

Sync Transfer	Frames 0 & 1	Frames ≥ 2
YES	$45,000 List	$50,000 List
NO	$35,000 List	$45,000 List

Medium Voltage Drives
Related Services
Statement of Conformance

STATEMENT OF CONFORMANCE IEEE-519, 2014

Toshiba guarantees that the T300MVi/2® and MTX/2® medium voltage adjustable speed drive product lines will meet or exceed IEEE-519 per table 1 and 2 standards as advertised at the input to the drive to reduce harmonic distortion associated with AC adjustable frequency drives and other nonlinear loads that employ the use of three-phase, six-pulse diode bridge rectifiers. During testing, the technologically advanced designs of the T300MVi/2® and MTX/2 have been proven to:

- Reduce voltage harmonic distortion, as measured at the input terminals, to less than 5% at full load operation per table 1. The daily and weekly percentiles (95th & 99th percentiles) in table 1 are met.
- Reduce current harmonic distortion, as measured at the input terminals, to less than 5% at full load operation per table 2 and table 5. The daily and weekly percentiles (95th & 99th percentiles) in table 2 are met.
- Not become overloaded by upstream harmonic sources.
- Not resonate with other power system components due to its specially designed input topology.
- Present no compatibility problems with engine generator sets.

Medium Voltage Drives
Related Services
Medium Voltage Worksheet

MEDIUM VOLTAGE WORKSHEET
Specification for Procurement 2400/3300/4160/6600 VAC Adjustable Speed Drive

PROJECT REFERENCE:		**R.F.Q. REFERENCE**	
SPEC. REFERENCE		**DATE**	

MOTOR DATA

HP/kW	
New/Existing	
Voltage (Volts)	
FLA (Amps)	
Speed (RPM)	
Motor Lead Length (Ft)	
Service Factor	
Space Heater (Volts/Watts)	
RTD (Make/Qty)	
Inverter-Duty	☐Yes ☐No
Encoder	

LOAD TYPE

Variable Torque	☐
Constant Torque	☐
Regeneration	☐
Fan/Pump	
Other	
Speed Range	**Hz to Hz**

BREAKAWAY TORQUE

0 to 100%	☐
101 to 150%	☐

Medium Voltage Drives
Related Services
Medium Voltage Worksheet

ENVIRONMENT

Control Room Max. Ambient	°C	
Control Room Min. Ambient	°C	
Elevation	Meters ASL	
Humidity Non-condensing	%	
Drive Cabinet Space Heater	☐Yes	☐No
Space Heater Test Circuit	☐Yes	☐No
Motor Space Heater Circuit (Externally Powered)	☐Yes	☐No

DESIGN STANDARDS

UL	☐	
cUL	☐	
IEEE 519	☐	
Other		

ENCLOSURE

NEMA 1	
NEMA 3R	
Electrical House	☐

SPEED REGULATION

0.5%, Without Tachometer	☐
0.1% With Tachometer	☐
Other	
Motoring	☐
Volts/Hz Speed Control	☐
Closed Loop Vector Control	☐
Master Follower	
Speed Regulation without Encoder/ Resolver	
Speed Regulation with Encoder/Resolver	

SUPPLY SYSTEM VOLTAGE (± 10%)

2400 V			
3300 V			
4160 V	☐		
6600 V	☐		
Other_____V	☐		
Line Frequency	☐60 Hz		☐50 Hz

Medium Voltage Drives
Related Services
Medium Voltage Worksheet

CABLE

Power Cable Entry	☐TOP	☐BOTTOM
Power Cable Exit	☐TOP	☐BOTTOM
Control Cable Entry	☐TOP	☐BOTTOM
Control Cable Exit	☐TOP	☐BOTTOM

OPTIONS

KIRK Key Interlocks	☐		
Relay Outputs 115 V, 2 A, Form-C	☐		
24 VDC Power Supply	☐		
4 to 20 mA Isolated Analog Outputs	☐Speed	☐Current	☐Voltage
	☐Load	☐Other	
Control Power Backup 1 KVA, 120 V, TIC UPS	☐		
Auxiliary Pilot Lights	☐		
Auxiliary Pilot Lights Type	☐		
Auxiliary Push Buttons	☐		
Auxiliary Push Buttons Type	☐		
Redundant Fan (3,460 V)	☐		
Additional Controls (Please Attach Control Schematic)	☐		
	☐		

AUXILIARY EQUIPMENT

Bypass Starter	
Across The Line	☐
RVAT	☐
Solid State Starter	☐
Synchronous Transfer	
Number of Motors	
Indoor Rated Sync.Transfer (GEAR)	
Outdoor Rated Sync.Transfer (GEAR)	
Gear Supplied by Others	

COMMUNICATION OPTIONS

TOSLINE S20	☐
DeviceNET	☐
ProfiBus	☐
Ethernet	☐
ModBus RTU/PLUS	☐
Other	

MOTOR PROTECTION

TE-RTD12	☐

Medium Voltage Drives
Related Services
Medium Voltage Worksheet

MULTILIN 369	☐
MULTILIN 869	
RTD TYPE	

SERVICES

Startup (Included in Price of Unit)	☐
Onsite Factory Training Testing	☐
Factory Training Houston	☐

SPARES

Spare Parts Kit	☐Yes	☐No
Spare Power Module	☐Yes	☐No

SOFTWARE

PC Interface Software	☐Yes	☐No

TESTING

Witness Test – QC Runback	☐
Witness Test – Dynamometer (Upto 1250 HP)	☐
Drive/Motor Combined Test at Motor Vendor's Facility	☐

ADDITIONAL REQUIREMENTS

Power Apparatus & Components
Medium Voltage Controllers
JK Series Starters

Toshiba's medium voltage JK Series motor controller is manufactured under ISO 9001 standards in the same Houston, Texas facility as motors and drives. The components of this series are arranged to produce a streamlined space-saving unit, using no internal power cables in the full-voltage type starters for ease of maintenance and enhanced safety features. These state-of-the-art medium voltage controllers are available in full-voltage or reduced-voltage models for the control of induction, wound rotor or synchronous motors, transformers, and capacitors.

Highlights

- JK400 & JK700 Series
- Reduced Footprint
- Rigid 11-Gauge Steel Frame
- Visible, Bolted Pressure, Isolation Switch
  - Less Resistance
  - Less Wear
  - No Insertion Pressure
  - Mechanical Interlocking System
- Reduced Voltage Auto-Transformer (RVAT) Controllers
  - Three Vacuum Contactors
  - Three Winding Copper-Wound Auto-Transformer with 50, 65, & 80% Voltage Taps
  - Adjustable Solid State Transition Timer & Incomplete Sequence Timer

Standard Features

- UL-Listed in US & Canada
- Meet NEMA Class E2 Requirements
- Front-Accessible Main Bus
- Current Transformers
- Mechanical & Electrical Interlocks
- Control Power Transformer with Primary/Secondary Fuses
- Solid State Protection Relay (Overload & Single Phase)
- Start/Stop Push Buttons
- Run/Off Pilot Lights

Medium Voltage Controllers

JK400 Series Starters

Product Scope

2300 to 6600 V
360 A Maximum
Up to 5000 HP

Standard Features

- 30 Inch Wide Footprint*
- Two-High Design Option
- Available Configurations:
  - Full-Voltage
  - Non-Reversing
  - Reversing

* Dimensions are based on NEMA Type 1, 12 enclosure ratings. For NEMA Type 3R, add 6" to width.

JK400 Series Starters Current Rating

Enclosure Type	Maximum Continuous Amps 46" & 60" One-High Controller		Maximum Continuous Amps 90" One-High Controller or Lower Controller in a Two-High Stacked Arrangement		Maximum Continuous Amps Upper Controller in a Two-High Stacked Arrangement
	Fixed Type	Drawout Type	Fixed Type	Drawout Type	Fixed & Drawout Type
Type 1 Ventilated	360 A	360 A	360 A	360 A	320 A
Type 1 Non-Ventilated	320 A	320 A	320 A	360 A	280 A
Type 12 & 3R	310 A	310 A	310 A	310 A	280 A

Notes:

- Actual limits based on your specific application parameters. All specifications subject to change without notice.

JK400 Series Short Circuit Withstand Capability

Interrupting Capacity (Symmetrical Amps)	Interrupting Capacity (Symmetrical MVA)	Short Time Capability 30 Seconds (Amps)	Short Time Capability 1 Second (Amps)	Dielectric Withst. 1 Minute (KVAC)	Impulse Voltage Withst. (KV)
50,000 @ 2.3 to 6.6 KV	200 @ 2.3 KV 350 @ 4.0 KV 400 @ 4.6 KV 570 @ 6.6 KV	2400 A	6000 A	18.2	60 KV

JK400 Series Application Table

Enclosed Max. Continuous Current (Amps)	Maximum Horsepower at Utilization Voltage								
	2300 V			4200 V			6600 V		
	Synchronous Motors		Induction Motors	Synchronous Motors		Induction Motors	Synchronous Motors		Induction Motors
	0.8 PF	1.0 PF		0.8 PF	1.0 PF		0.8 PF	1.0 PF	
360	1500	1750	1500	2500	3000	2500	4000	5000	4000
320	1250	1500	1250	2250	2500	2250	3500	4500	3500
310	1250	1500	1250	2000	2500	2000	3500	4000	3500
280	1000	1250	1000	1750	2250	1750	3000	3500	3000

Notes:

- For transformer and capacitor load-switching applications, consult factory.
- Maximum rating depends on enclosure rating.

Medium Voltage Controllers

JK700 Series Starters

Product Scope

2300 to 6600 V
720 A Maximum
Up to 6000 HP

Standard Features

- 36 Inch Wide Footprint*
- One-High Enclosure Design
- Available Configuration:
  - Full-Voltage
  - Non-Reversing
  - Reversing

* Dimensions are based on NEMA Type 1, 12 enclosure ratings. For NEMA Type 3R, add 6" to width.

JK700 Series Starters Current Rating

Enclosure Type	Max. Continuous Amps
Type 1 Ventilated	720 A
Type 1 Non-Ventilated	650 A
Type 12 & 3R	600 A

Notes:
- Actual limits are based on your specific application parameters. All specifications subject to change without notice.

JK700 Series Short Circuit Withstand Capability

Interrupting Capacity (Symmetrical Amps)	Interrupting Capacity (Symmetrical MVA)	Short Time Capability 30 Seconds (Amps)	Short Time Capability 1 Second (Amps)	Dielectric Withst 1 Minute (KVAC)	Impulse Voltage Withst (KV)
50,000 @ 2.3 to 6.6 KV	200 @ 2.3 KV 350 @ 4.0 KV 400 @ 4.6 KV 570 @ 4.6 KV	4320 A	8000 A	AC 13.25 DC 19	60 KV

JK700 Series Application Table

Enclosed Max. Continuous Current (Amps)	Maximum Horsepower at Utilization Voltage					
	2300 V			4200 V		
	Synchronous Motors		Induction Motors	Synchronous Motors		Induction Motors
	0.8 PF	1.0 PF		0.8 PF	1.0 PF	
720	3000	3500	3000	5500	6000	5500
650	2750	3000	2750	5000	5500	5000
600	2500	2750	2500	4500	5000	4500

Notes:
- Maximum rating depends on enclosure rating.
- Consult factory for 6600 V ratings.

Medium Voltage Controllers

JK400 & JK700 Series Pricing

JK Full Voltage Non-Reversing (NEMA 1) Controller Pricing

Nominal System Voltage	HP	Contactor Type	Model Number	H	W	D	List Price
				Dimensions (in.)			
2300	75 to 800	400 A Fixed	FK400B2_	46	30	36	$40,000
	900 to 1500	400 A Fixed	FK400B2_	46	30	36	$42,000
	75 to 800	400 A Drawout	JK400B2_	46	30	36	$43,000
	900 to 1500	400 A Drawout	JK400B2_	46	30	36	$46,000
	1750 to 2250	720 A Fixed	JK700B2_	90	36	36	$62,000
	2500	720 A Fixed	JK700B2_	90	36	36	$64,000
4160	200 to 1500	400 A Fixed	FK400B4_	46	30	36	$40,000
	1750 to 3000	400 A Fixed	FK400B4_	46	30	36	$42,000
	200 to 1500	400 A Drawout	JK400B4_	46	30	36	$43,000
	1750 to 3000	400 A Drawout	JK400B4_	46	30	36	$46,000
	3000 to 4000	720 A Fixed	JK700B4_	90	36	36	$62,000
	4500 to 5000	720 A Fixed	JK700B4_	90	36	36	$64,000
6600	200 to 700	400 A Fixed	FK400BB_	46	30	36	$43,000
	750 to 2250	400 A Fixed	FK400BB_	46	30	36	$46,000
	2500 to 4500	400 A Fixed	FK400BB_	46	30	36	$58,000
	200 to 700	400 A Drawout	JK400BB_	46	30	36	$47,000
	75 to 2250	400 A Drawout	JK400BB_	46	30	36	$50,000
	2500 to 4500	400 A Drawout	JK400BB_	46	30	36	$56,000
	5000 to 9000	720 A Fixed	JK700BB_	90	36	36	CF

Notes:

- For other system voltages (i.e. 3300 V), consult factory.
- HP rating is based on a typical 4-pole motor. Always use motor FLA rating. Refer to application tables (i.e. ampere rating in the appropriate enclosure rating) to size starters.
- 46-inch tall one-high units can be supplied as a 60” tall enclosure with a larger low voltage compartment. Consult factory for price adder.

Medium Voltage Controllers

JK400 & JK700 Series Pricing

JK Reduced Voltage Autotransformer Type (NEMA 1) Controller Pricing

Nominal System Voltage	HP	Contactor Type	Model Number	H	W	D	List Price
				Dimensions (in.)			
2300	100 to 350	400 A Drawout	JK420B2_	90	36	36	$58,000
	400	400 A Drawout	JK420B2040	90	36	36	$59,000
	500	400 A Drawout	JK420B2050	90	36	36	$60,000
	600	400 A Drawout	JK420B2060	90	36	36	$61,000
	700	400 A Drawout	JK420B2070	90	36	36	$68,000
	800	400 A Drawout	JK420B2080	90	36	36	$69,000
	900	400 A Drawout	JK420B2090	90	36	36	$74,000
	1000	400 A Drawout	JK420B2100	90	36	36	$76,000
	1250	400 A Drawout	JK420B2125	90	36	36	$78,000
	1500	400 A Drawout	JK420B2150	90	42	36	$80,000
	1750 to 2250	720 A Fixed	JK720B2_	90	72	36	$168,000
	2500	720 A Fixed	JK720B250	90	84	36	$184,000
4160	200	400 A Drawout	JK420B4020	90	36	36	$58,000
	300 to 400	400 A Drawout	JK420B4_	90	36	36	$59,000
	500	400 A Drawout	JK420B4050	90	36	36	$60,000
	600 to 700	400 A Drawout	JK420B4_	90	36	36	$64,000
	800 to 900	400 A Drawout	JK420B4_	90	36	36	$66,000
	1000	400 A Drawout	JK420B4100	90	36	36	$68,000
	1250	400 A Drawout	JK420B4125	90	36	36	$70,000
	1500	400 A Drawout	JK420B4150	90	42	36	$74,000
	2000	400 A Drawout	JK420B4200	90	42	36	$76,000
	2250	400 A Drawout	JK420B4225	90	42	36	$80,000
	2500	400 A Drawout	JK420B4250	90	42	36	$83,000
	3000*	400 A Drawout	JK420B4300	90	42	36	$88,000
	3500 to 4000	720 A Fixed	JK720BB_	90	72	36	$160,000
	4500	720 A Fixed	JK720BB450	90	72	36	$164,000
	5000 to 5500	720 A Fixed	JK720BB_	90	84	36	$186,000

Notes:

- For other system voltages (i.e. 3300 V), consult factory.
- HP rating is based on a typical 4-pole motor. Always use motor FLA rating. Refer to application tables (i.e. ampere rating in the appropriate enclosure rating) to size starters.
- Consult factory for UL listing.

Medium Voltage Controllers

JK Solid State Starters Series

Toshiba's JKSSS medium voltage motor starter series is designed to softly start and stop AC motors in any fixed speed application regardless of power condition, load condition, and the extremity of its environment. Rated at 500% for 60 seconds, the JKSSS motor starter series is one of the highest rated power devices in current-carrying capacity. The JKSSS line provides maximum protection with "true thermal modeling," while allowing smooth, stepless control of acceleration and deceleration.

Highlights

- JKSSS4 & JKSSS7 Series
- Soft Start
- **NEW 7" Full-Color Touchscreen Keypad**
- Reduced Footprint
- Rigid 11-Gauge Steel Frame
- Programmable Via Keypad or Software
- Fiber Optically Isolated Low Voltage Compartment
- Built-In 120 V Control Power Transformer; Voltage & Current Metering
- Fully-Rated Bypass Contactor for Increased Thermal Capacity & Optional Across-the-Line Start
- Line Isolation Vacuum Contactor
- Heavy Duty SCR Stack Assemblies with Ring Transformer Isolation
- Visible Grounding Bar
- Coordinated Motor Fuses with Blown Fuse Indicators
- Ground Fault Protection

New Touchscreen, showing previous keypad programming method/display.

New Touchscreen, showing new programming method/display.

Standard Features

- JKSSS4 UL-Listed in US & Canada
- NEMA Type 1 Enclosure
- Meets NEMA Class E2 Requirements
- Front-Accessible Main Bus
- Top or Bottom Entry & Exit
- Removable Entry Plates for Easy Connection
- RTD Input for Precision Thermal Management
- Built-In Real-Time Clock
- Current Transformers
- Non-Load-Break Disconnect Switch with Door Safety Interlocking
- Single- & Three-Phase Overload Protection
- LED Trip Indicator
- Manual or Remote Reset (Auto-Reset Optional)

Medium Voltage Controllers

JKSSS4 Solid State Starters

Product Scope

2300 to 6600 V
360 A Maximum
Up to 5000 HP

JKSSS4 Series Current Ratings

Enclosure Type	Max. Continuous Amps 90" One-High Controller
Type 1 Ventilated	360 A
Type 12 & 3R	300 A

Notes:
- Actual limits based on your specific application. All specifications subject to change without notice.

JKSSS4 Series Short Circuit Withstand Capability

Interrupting Capacity (Symmetrical Amps)	Interrupting Capacity (Symmetrical MVA)	Short Time Capability 30 Seconds (Amps)	Short Time Capability 1 Second (Amps)	Dielectric Withst 1 Minute (KVAC)	Impulse Voltage Withst (KV)
50,000 @ 2.3 to 6.6 KV	200 @ 2.3 KV 350 @ 4.0 KV 570 @ 6.6 KV	2400 A	6000 A	18.2	60 KV

JKSSS4 Series Application Table

Enclosed Max. Continuous Current (Amps)	Maximum Horsepower at Utilization Voltage								
	2300 V			4200 V			6600 V		
	Synchronous Motors		Induction Motors	Synchronous Motors		Induction Motors	Synchronous Motors		Induction Motors
	0.8 PF	1.0 PF		0.8 PF	1.0 PF		0.8 PF	1.0 PF	
360	1500	1750	1500	2500	3000	2500	4000	5000	4000
300	1000	1250	1000	1750	2250	1750	3500	4000	3500

Notes:
- Line reactors and MOVs are not required with Toshiba solid state starters.
- The starter is not affected by line capacitance, power source rating (MVA), multiple starters on the supply bus, or cable length.
- Maximum rating depends on enclosure rating and motor FLA.

Medium Voltage Controllers

JKSSS7 Solid State Starters

Product Scope

2300 to 4200 V
720 A Maximum
Up to 6000 HP

JKSSS7 Series Current Ratings

Enclosure Type	Max. Continuous Amps 90" One-High Controller
Type 1 Ventilated	720 A
Type 1 Non-Ventilated	650 A
Type 12 & 3R	600 A

Notes:
- All specifications subject to change without notice.
- Actual limits based on your specific application.

JKSSS7 Series Short Circuit Withstand Capability

Interrupting Capacity (Symmetrical Amps)	Interrupting Capacity (Symmetrical MVA)	Short Time Capability 30 Seconds (Amps)	Short Time Capability 1 Second (Amps)	Dielectric Withst 1 Minute (KV)	Impulse Voltage Withst (KV)
50,000 @ 2.3 to 4.2 KV	200 @ 2.3 KV 350 @ 4.0 KV	4320 A	8000 A	AC 13.25 DC 19	60 KV

JKSSS7 Series Application Table

Enclosed Max. Continuous Current (Amps)	Maximum Horsepower at Utilization Voltage					
	2300 V			4200 V		
	Synchronous Motors		Induction Motors	Synchronous Motors		Induction Motors
	0.8 PF	1.0 PF		0.8 PF	1.0 PF	
720	3000	3500	3000	5500	6000	5500
650	2750	3000	2750	5000	5500	5000
600	2500	2750	2500	4500	5000	4500

Notes:
- Line reactors and MOVs are not required with Toshiba solid state starters.
- The starter is not affected by line capacitance, power source rating (MVA), multiple starters on the supply bus, or motor cable length.
- Maximum rating depends on enclosure rating.

Medium Voltage Controllers

JK Solid State Starter Series Pricing

JK Reduced Voltage Solid State Starter (NEMA 1) Pricing

Nominal System Voltage	HP	Contactor Type	Model Number	H	W	D	List Price
				Dimensions (in.)			
2300	100 to 250	400 A Fixed	JKSSS4-B2_	90	30	36	$72,000
	300 to 350	400 A Fixed	JKSSS4-B2_	90	30	36	$74,000
	400 to 500	400 A Fixed	JKSSS4-B2_	90	30	36	$75,000
	600 to 800	400 A Fixed	JKSSS4-B2_	90	30	36	$76,000
	900	400 A Fixed	JKSSS4-B2090	90	30	36	$78,000
	1000	400 A Fixed	JKSSS4-B2100	90	30	36	$81,000
	1250	400 A Fixed	JKSSS4-B2125	90	30	36	$83,000
	1500	400 A Fixed	JKSSS4-B2150	90	30	36	$86,000
	1750	720 A Fixed	JKSSS7-B2175	90	72	36	$144,000
	2000 to 2250	720 A Fixed	JKSSS7-B2_	90	72	36	$152,000
4160	200 to 400	400 A Fixed	JKSSS4-B4_	90	30	36	$75,000
	500 to 700	400 A Fixed	JKSSS4-B4_	90	30	36	$76,000
	800 to 1000	400 A Fixed	JKSSS4-B4_	90	30	36	$78,000
	1250	400 A Fixed	JKSSS4-B4125	90	30	36	$81,000
	1500	400 A Fixed	JKSSS4-B4150	90	30	36	$83,000
	1750 to 2000	400 A Fixed	JKSSS4-B4_	90	30	36	$86,000
	2250 to 2500	400 A Fixed	JKSSS4-B4_	90	30	36	$90,000
	3000	400 A Fixed	JKSSS4-B4300	90	30	36	$94,000
	3500	720 A Fixed	JKSSS7-B4350	90	72	36	$184,000
	4000 to 4500	720 A Fixed	JKSSS7-B4_	90	72	36	$207,000
	5000 to 5500	720 A Fixed	JKSSS7-B4_	90	72	36	$216,000
	6000	720 A Fixed	JKSSS7-B4600	90	72	36	$224,000

Notes:

- For other system voltages (i.e. 3300 V), contact the factory.
- HP rating is based on a typical 4-pole motor. Always use motor FLA rating. Refer to application tables (i.e. ampere rating in the appropriate enclosure rating) to size starters.
- For 6600 V starters, consult factory.

Medium Voltage Controllers

JK Series Part Numbering Convention

The JK series combines a fixed isolation switch with either a drawout or fixed contactor/main fuse assembly.

Available Options

- **JK** – Withdrawable 400 A or Fixed 720 A Contactor/ Main Power Fuse Assembly
- **FK** – Fixed Type 400 A Contactor Power Fuses
- **JKSSS** – Reduced Voltage Solid-State Type with Fixed 400 A or 720 A Isolation Contactor
- **JKSSD** – Reduced Voltage Solid-State Type with Drawout 400 A Isolation Contactor

Available Controller Types

- **FVNR** – Full Voltage Non-Reversing Type
- **FDR** – Transformer Feeder (As Standard Uses Latched-Type Contactor)
- **FVR** – Full-Voltage Reversing Type
- **RVAT** – Reduced-Voltage Auto-transformer Type
- **SSS** – Reduced-Voltage Solid-State Type

Consult factory for other controller types that are available (i.e. reversing SSS, synchronous RVAT).

Ordering Information: Use the following part numbering convention to configure the JK Starter when placing your order. For transformer feeder application, select "ZZZ" under Motor Rating; specify transformer KVA separately.

Example Part Number:	JK/FK/JKSSS	4	00	B	4	025	SH	B

Series

Contactor Rating:
4 — 400 A
7 — 720 A

Controller Type:
00 — FVNR
01 — FDR
10 — FVR
20 — RVAT
N/A — SSS

Enclosure Rating:
B — 1 (Indoor)
K — 12 (Indoor)
E — 3R (Outdoor)
A — 1 Gasketed (Indoor)
Z — OTHER

Line Voltage:
2 — 2400
3 — 3300
4 — 4160
A — 4800
B — 6600
Z — OTHER

Motor Rating:

010 — 100 HP	045 — 450 HP	150 — 1500 HP	
012 — 125 HP	050 — 500 HP	175 — 1750 HP	450 — 4500 HP
015 — 150 HP	060 — 600 HP	200 — 2000 HP	500 — 5000 HP
020 — 200 HP	070 — 700 HP	225 — 2250 HP	550 — 5500 HP
025 — 250 HP	080 — 800 HP	250 — 2500 HP	600 — 6000 HP
030 — 300 HP	090 — 900 HP	300 — 3000 HP	ZZZ — OTHER
035 — 350 HP	100 — 1000 HP	350 — 3500 HP	
040 — 400 HP	125 — 1250 HP	400 — 4000 HP	

Additional Functions:
- See Options Section
- Options Should be Entered in Alphabetical Order
- If the Smart Part Number is Longer than Two Options, Replace all Options with a "-1"
- List all Options with Descriptions for All Equipment

Load Cable Enclosure Exit Location:
B — Bottom Exit
T — Top Exit

Medium Voltage Controllers

JK Series Factory-Installed Modifications

Medium Voltage Starter Options

Pilot Devices

Part Number	Description	Price
B1	Push-buttons: Start/Stop Standard on FVNR and RVAT, Opt. on JKSSS	$500
BE	Push-button: Emergency Stop, Mushroom Head (Red)	$300
BR	Push-button: “Reset” Overload Relay	$250
BX	Push-button: Specify Function	CF
PB	Pilot Light: Bypass Mode Indication (White) for JKSSS	$350
PF	Pilot Light: Fault Indication (Amber); Protection Relay Trip Indication	$350
PG	Pilot Light: Stop Indication (Green); Standard on FVNR and RVAT	$350
PP	Pilot Light: Power On Indication (White)	$350
PR	Pilot Light: Run Indication (Red); Standard on FVNR and RVAT	$350
PX	Pilot Light: Miscellaneous; Specify Function	CF
SO	Selector Switch: Off/On	$350
SH	Selector Switch: Hand/Off/Auto	$350
SL	Selector Switch: Local/Remote	$350
SX2	Selector Switch: Two-position/Specify Function	CF
SX3	Selector Switch: Three-position/Specify Function	CF

Notes:
- When selecting push-button or pilot light, add color code.
- Full-voltage and RVAT-type controllers come with standard pilot lights (see individual controller description). These options are for additional lights on these controllers.

Protective Relays

Part Number	Description	Price
-	Solid-state Protection Relay (Overload/Phase Failure) - Standard with Drawout Contactor IEEE Device no. 46/51. For JKSSS, see “Emergency Full Voltage Starting” Option	STD
M3	Multilin 369, 12-channel RTD Monitor & OL, Includes CTs & Ground CT	$24,000
M4	Multilin 869, 12-channel RTD Monitor & OL, Includes CTs & Ground CT	$26,000
MX	Multi-function Motor Protection Relay	CF
RT	RTD Monitor/Relay, Door-mounted, 12 RTD Inputs, Pt100, Ni100, Ni120, Cu10, IEEE Device no. 49. JKSSS Includes 12 RTD Inputs Standard	$4,000
V1	Undervoltage Relay (Standard on JKSSS) IEEE Device no. 27	$750
V2	Overvoltage Relay (Standard on JKSSS) IEEE Device no. 59	$750
V3	Under, Overvoltage Relay (Standard on JKSSS) IEEE Device no. 27/59	$1200
-	Incomplete Sequence Protection Standard on Applicable Controllers IEEE Device no. 48	STD

Medium Voltage Controllers

JK Series Factory-Installed Modifications

Control Relays

Part Number	Description	Price
R22	4-pole: Contact Arrangement 2NO, 2NC	$600
R40	4-pole: Contact Arrangement 4NO	$600
R44	8-pole: Contact Arrangement 4NO, 4NC	$1000
R62	8-pole: Contact Arrangement 6NO, 2NC	$1000
R80	8-pole: Contact Arrangement 8NO	$1000
TX	Timing Relay, Solid State (Specify Time-range and Function)	$850

Miscellaneous

Part Number	Description	Price
HS	Cubicle Space Heater (Standard on Type 3R Enclosures)	$600
HT	Thermostat (for Cubicle Space Heater)	$600
D8	Lighting Arrestor - Three-phase, Station Class (15” inc. sec. may be Required)	$4,800
D9	Surge Capacitor (Three-phase)	CF
T4	Add 2nd PT/CPT, 100/300 to 500 VA (Standard on SSS)	$1,500
T8	Additional CPT Capacity (VA)	CF
-	Device Markers	STD
KK	Key Interlock	$1,700
L1	Latched Contactor (Specify Close Trip Voltages) Includes AC/DC Rectifier	$3,000
L2	Capacitor Trip Device (For Use on Latched-type Contactors)	$1,200
L3	Blown-fuse Trip Mechanism (UL not Available if Required) 400 Series Only	$1,500

Notes:
- Option T4 is not used if option MY (below) is selected.

Metering

Part Number	Description	Price
MA	Ammeter, AC, Single-phase Monitoring (Standard on Full Voltage and RVAT)	$700
MT	Ammeter Switch (Three-phase Monitoring)	$700
MV	Voltmeter (AC Single-phase Monitoring)	$1,500
MY	Voltmeter (AC Single Three-phase Monitoring, Includes: Meter, Three-phase Switch, Additional PT)	$2,900
ME	Elapsed Time Meter	$1,000
W3	Current Transducer (4-20 mA Output)	$2,400

Notes:
- JKSSS includes many metering features. See JKSSS section for further details.

Medium Voltage Controllers

JK Series Factory-Installed Modifications

Enclosure

Part Number	Description	Price
-	Type-1 General Purpose (Indoor)	STD
K	Type-12 Dust-tight (Indoor), One-high (46”-60” H) Controller	$1000
	Type-12 Dust-tight (Indoor), all 90” H Cubicles (Two-high Controller, RVAT, SSS)	$2200
KD	Drip Shield (for Type 1 or 12 Enclosure)	$1200
E	Type-3R Rainproof, Sleet-resistant (Outdoor), One-high (46”-60” H) Controller	$8400
	Type-3R Rainproof, Sleet-resistant (Outdoor), all 90” H Cubicles (Two-high Controller, RVAT, SSS)	$11000
-	Incoming Section	CF

Special Options For Solid State Starters

Part Number	Description	Price
F3	Emergency Full Voltage Starting Includes: SSS/Bypass Selector Switch Current Transformers Solid State Overload	$2200
MZ	Ground Fault: Zero Sequence, Includes GF Board Sensor (ZCT), IEEE Device no. 50G	$2500
D4	Input Isolation Contactor/Power Fuses Change from Fixed to Drawout	$4200
-	Contactor for Power Correction Capacitor Switching	CF

Communications Option Code	Modification Description	List Price
XVS1	Provides Modbus RTU over Ethernet (Modbus TCP) & Internet (TCP/IP) over Ethernet	$3,200
XVS2	Provides Modbus RTU over Ethernet (Modbus TCP)	$3,200
CO	Provides CANopen Communications	$5200
DN	Provides DeviceNetTM Communications	$5200
EI	Provides EtherNet/IP Communications	$6400
PB	Provides PROFIBUS Communications	$3,200
PN	Provides PROFINET Communications	$5200

Notes:

- Option E includes cubicle space heater. If thermostat is required, add Option HT.

Medium Voltage Controllers
JK Series Accessories

Push-button/Pilot Light Color Codes

Color Pb Caps	Color Pl Lens	Color Code
Green	Green	G
Black	-	Bw
Red	Red	R
White	White	W
Yellow	Yellow	Y
Blue	Blue	B

JK Series Accessories

Catalog Number	Item	Description	List Price
LCV5010H20G01	JK Yoke	Carriage Lifting Attachment	$400
SSS TOOL	Software	For JKSSS Series	$650

Notes:
- JK lifting yoke is recommended for two-high FVNR & RVAT-type controllers with 400A Withdrawable Contactors.
- Software for programming, commissioning and monitoring includes CD and USB to RS485 converter.

Vacuum Contactors

Medium Voltage JK OEM Power Cells

Toshiba's JK OEM power cells are UL listed. This compact, front-accessible design can be used in either motor or distribution applications (2300 to 6600 V, 7200 V maximum).

OEM power cells are designed to replace existing air contactors or old vacuum contactor applications when used for motors or small distribution feeders. This kit provides state-of-the-art Toshiba vacuum technology, a patented bolt-pressure isolation switch.

Customers can use their existing standard cubicles, wiring methods, and components with these power cells, allowing for valuable real-estate and labor dollars to be saved.

Standard Features

- Toshiba Medium Voltage Vacuum Contactor, 400 A
- Draw-Out or Fixed-Type
- Patented, Bolted Pressure-Isolation Switch
- Less than 24" Wide, 29.3" High, Less than 33" Deep
- Available with or without Main Power Fuse-Clips (Single- or Double-Barrel)
- Front-Accessible
- Electrically Held or Latched-Type Versions

Visible, Bolted Pressure, Isolation Switch Features

- Less Resistance
- Less Wear
- No Insertion Pressure
- Mechanical Interlocking System

JK OEM Cell Application Table

System Voltage	0.8 PF Ind./Syn. Motor	1 PF Syn. Motor	Three-Phase Transformer	Three-Phase Capacitor
2.2 to 2.5 KV	1750 HP	2000 HP	1500 KVA	1500 KVAR
3 to 3.3 KV	2250 HP	2500 HP	2000 KVA	2000 KVAR
4 to 5 KV	3000 HP	3500 HP	3000 KVA	2000 KVAR
6 to 6.6 KV	4500 HP	5000 HP	4000 KVA	2000 KVAR

Notes:
- The above table is based on general-load data standard application.
- Lower limitations may apply on specific applications (i.e. applications above 1000 masl).

Vacuum Contactors

JK OEM Power Cell Pricing

Model Number	Description	Application	List Price
GCV5084L03G00-7	Fixed-type Without Fuse Clips (With Bus)	Used When Upstream Protection is Provided	$14,700
GCV5084L03G01-7	Fixed-type With Single-barrel Fuse Clips	Motor HP Rating up to 1500 HP	$14,000
GCV5084L03G02-7	Fixed-type With Double-barrel Fuse Clips	Motor HP Rating up to 3000 HP	$14,000
GCV5084L03G03	Fixed-type for CPT/PT/CB	Includes Bolted Pressure - Isolation Switch for Disconnecting CPT/PTs, Provision to Fix-mount 1 or 2 CPT/PTs with Mounting Provision for Secondary Low Voltage Circuit Breaker	$7,500
GCV5084L03G04	Fixed-type for CPT/PT/LS	Includes Bolted Pressure - Isolation Switch for Disconnecting CPT/PTs, Provision to Fix-mount 1 or 2 CPT/PTs with Limit Switch	$7,500
GCV5084L04G00-71	Drawout-type Without Fuse Clips	Used when Upstream Protection is Provided	$18,700
GCV5084L04G01-71	Drawout-type With Single-barrel Fuse Clips	Motor HP Rating up to 1500 HP	$18,000
GCV5084L04G02-71	Drawout-type With Double-barrel Fuse Clips	Motor HP Rating up to 3000 HP	$18,200
GCV5084L05G00-7L1	Fixed-latched-type Without Fuse Clips	Used when Upstream Protection is Provided	$15,800
GCV5084L05G01-7L1	Fixed-latched-type With Single-barrel Fuse Clips	For Distribution Loads (400 A Maximum), Transformer, or Capacitor Switching	$15,100
GCV5084L05G02-7L1	Fixed-latched-type With Double-barrel Fuse Clips	For Distribution Loads (400 A Maximum), Transformer, or Capacitor Switching	$15,100
GCV5084L06G00-71L1	Drawout-latched-type Without Fuse Clips	Used when Upstream Protection is Provided	$20,200
GCV5084L06G01-71L1	Drawout-latched-type With Single-barrel Fuse Clips	For Distribution Loads (400 A Maximum), Transformer, or Capacitor Switching	$19,600
GCV5084L06G02-71L1	Drawout-latched-type With Double-barrel Fuse Clips	For Distribution Loads (400 A Maximum), Transformer, or Capacitor Switching	$19,600

Factory Modifications

Option	Modification Description	List Price
K1	Provision for Addition of Key Interlock Switch (to Lock Disconnect in Closed Position)	$500
K2	Provision for Addition of Key Interlock Switch (to Lock Disconnect in Open Position)	$500

Notes:

- Add modification option code to end of OEM kit part number (e.g. GCV5084L03G00K1).
- Key switch is not included. Use Superior catalog no. S105821Y (Type B-4003-1).

Vacuum Contactors
Low & Medium Voltage Vacuum Contactors

Toshiba is a leading manufacturer of vacuum contactors with over 50 years experience developing the latest technologies availalbe in the market. Our vacuum contactors use an electronics-controlled circuit with a compact design to ensure reliability, ease-of-use, and safety. They are suitable for motor starters, transformer feeders, and capacitor-switching.

Standard Features

- **Environment-Resistant:** Ideal for Use in High Dust Areas; Switching Arc is Contained within Vacuum Bottle, Shielding Main Contacts
- **Reduced Maintenance:** Vacuum Bottle Contacts Have Long Life with Virtually No Maintenance
- **No External Surge Protection:** Special Main Contact Materials Minimize Chopping Current; No Surge Suppressor/Arrester Required Except for Special Applications
- **Designed for Safety:** High & Low Voltage Parts are totally Separated by Insulated Barrier (Non-Flammable Molded Frame)
- **Conformity Industrial Standards:** Conforms to Latest International Standards Such as UL, CSA, AS, BS, NEMA, IEC60470 (2000); Consult Factory On Each Series
- **Electronic-Control Drive Unit:** All Contactors Include Electronic Control of Operating Coil Which Offers Wide Control Voltage of 100 to 240 VAC & 100 to 250 VDC, Anti-Chopping Feature Reduce Power Consumption
- Electrically Held or Latched-Type Versions (Medium Voltage Models)

HCV-7HA (7200 V, 400 A) Contactor

- **New HCV-7HA(L) Contactor:** Available in Non-latched and Latched Type Versions; Contactor has Same Dimensions as the HCV-5HA, but Includes Higher Performance Vacuum Interrupter
- **Higher Interrupting-Performance:** Afford a Wide Margin of Protective Coordination with Any Type of Power Fuse Resulting in Increased Electrical Safety & Reliability

HCV-7HA (7.2 KV, 400 A)

Vertical Magnetic Arc Dispersion System

- **Designed for Longer Wear**: Unique Vertical Magnetic Arc Dispersion System, USA patent (HCV-1KAU, HCV-7HA, HCV-7HAL, HCV-6KAU, HCV-6KALU)

Axial Magnetic Field Interrupter - Arc Dispersion

Vacuum Contactors

Low Voltage
Vacuum Contactor Specifications

Low Voltage Technical Data

Model	HCV-1JBU	HCV-1KAU
Voltage	208 to 1500 V	
Operational Current	600 A	720 A
Rated Thermal Current	600 A	720 A
Interrupting Current	42,000 A	
Peak Withstand Current	-	85 KA
Short-Circuit Making/Breaking Current IEC 60470 (2000)	6000 A (100 Times)	7200 A (100 Times)
	6000 A (25 Times)	7200 A (25 Times)
Withstand Overload Current	3600 A for 30 Seconds	4320 A for 30 Seconds
	6000 A for 2 Seconds	7200 A for 2 Seconds
	9000 A for 1 Second	10,800 A for 1 Second
	30,000 A for 0.05 Seconds	36,000 A for 0.05 Seconds
Coordination with Current-Limiting Fuses	50 KA	45 KA
Switching Frequency	1200/Hour	
Mechanical Life	2.5 Million	
Electrical Life	500,000	
Impulse Withstand	15 KV	
Dielectric Strength	5.5 KV for 1 Minute	
Pick-up Voltage	85% Hot to 70% Cold AC or DC	
Drop-out Voltage	20% or More of Rated Control Voltage (Cold)	

Notes:
- Maximum required test; actual life under normal conditions is greater.

Vacuum Contactors

Low Voltage
Vacuum Contactor Specifications

Low Voltage Technical Data

Model		HCV-1JBU	HCV-1KAU
Control Voltage	Standard	100 to 240 VAC/DC	
Control Circuit Burden	Closing	1080 VA	
	Holding	50 VA	
Auxiliary Contact Ratings	Arrangement	3NO-3NC	
	Current	10 A (A600)	
	Voltage	600 V Maximum, 48 V Minimum	
	VAC	720 VA (P.F. 0.35)	
	VDC	60 W (L/R 150 ms)	
Application Conditions	Altitude without Derating	Lower than 3300 ft. (1000 m)	
	Ambient	-5 to 40°C	
	Relative Humidity	45 to 85%	
	Vibration	Maximum 20 Hz to 1 G	
	Shock	Maximum 30 G	
Weight in lbs. (kg)		59.5 (27)	61.7 (28)

Vacuum Contactors

Low Voltage
Vacuum Contactor Specifications

Low Voltage Application Table

Model	System Voltage	Induction Motor	Three-Phase Transformer	Three-Phase Capacitor
	208 V	200 HP	100 KVA	-
	230 V	250 HP	200 KVA	200 KVAR
	380 V	300 HP	350 KVA	-
	460 V	500 HP	400 KVA	400 KVAR
	575/600 V	600 HP	560 KVA	500 KVAR
	762/796 V	800 HP	720 KVA	-
	1500 V	1600 HP	1400 KVA	1400 KVAR
	230 V	300 HP	240 KVA	250 KVAR
	380 V	450 HP	400 KVA	-
	460 V	600 HP	480 KVA	500 KVAR
	575/600 V	700 HP	600 KVA	600 KVAR
	762/796 V	900 HP	800 KVA	-
	1500 V	2000 HP	1500 KVA	1500 KVAR

Notes:
- The above table is based on general load data and standard application.
- Lower limitations may apply on specific application (i.e. applications above 3000 meter elevations).

Accessories

- **Capacitor Trip Device:** Used for Latched Contactor when DC Power is Not Available; Charges from AC Power, Supplies DC Power to Trip Coil
- **Control Power Rectifier:** Converts AC to DC Control Power for Trip Coil on Latched-Type Contactors
- **Surge Suppressor:** Three-Phase-Type NV60K304T1 for 3.6 to 7.2 KV, NVK95K304T1 for 12 to 15 KV; Surge Suppressor Composed of Capacitor and Series Resistor for an Excellent Protection Device; Features Suppression, Decreased Surge Generation; Suitable for Protecting Motors and Transformers Requiring Frequent Operations
- **Mechanical Interlock:** Used in a Reversing Starter to Mechanically Prevent Forward/ Reverse Contactors from Closing Simultaneously (Not Available for CV-10 Series)

Reversing Contactor Assembly

- Low Voltage Vacuum Contactors, HCV-1JBU (600 A, 208 to 1500 V) and HCV-1KAU (720 A, 208 to 1500 V) Available in Assembly for Reversing Motor Applications; Assembly Consists of Two Contactors on Common Base-plate with Mechanical Interlock; Line-Side Bus Jumpers with Incoming Mechanical Lugs, Load-Side Cable Jumpers, Output Mechanical Lugs also Included

Vacuum Contactors

Medium Voltage
Vacuum Contactor Specifications

Medium Voltage Technical Data

Model	HCV-5HA	HCV-5HAL	HCV-7HA	HCV-7HAL	HCV-6KAU	HCV-6KALU	CV-10HA(L)	CV-10HB(L)
Rated Supply Voltage (Rated Maximum Voltage)	2.4 to 6.6 KV (7.2 kV)						11 to 13.8 kV (15kV)	11 to 12 kV (13.8 kV)*
Operational Current	400 A		400 A		720 A		400 A	
Rated Thermal Current	450 A		450 A		800 A		450 A	
Interrupting Current	7000 A @ 5 kV (4500 A @ 7.2 kV)		7200 A		7200 A		5000 A @ 12 kV (4000 A @ 15 kV)	5000A **
Peak Withstand Current	15.8 kA		20 kA		20 kA		12.5 kA	
Class E1 MVA	29/60/54 (2400 V/5000 V/6900 V)		30/62/86 (2400 V/5000 V/6900 V)		30/62/86 (2400 V/5000 V/6900 V)		95/96 (11 kV/13.8 kV)	95 (11 kV)
Class E2 MVA	200/400/600 (2400 V/5000 V/6900 V)		200/400/600 (2400 V/5000 V/6900 V)		200/400/600 (2400 V/5000 V/6900 V)		953/1195 (11 kV/13.8 kV)	
Withstand Overload Current	2400 A for 30 Seconds		2400 A for 30 Seconds		4320 A for 30 Seconds		2400 A for 30 Seconds	
	6000 A for 1 Second		6000 A for 1 Second		10,800 A for 1 Second		8000 A for 1 Second	
Short Circuit Current (E2)	50 kA (130 kA Peak) See Coordination Below		50 kA (130 kA Peak) See Coordination Below		50 kA (130 kA Peak) See Coordination Below		50 kA (130 kA Peak) See Coordination Below	
Coordination W/Current Limiting Fuses	Peak Let-Thru 65 kA Max.		Peak Let-Thru 77 kA Max.		Peak Let-Thru 85 kA Max.		Peak let-Thru 36 kA Max.	
Switching Frequency	1200/Hr	300/Hr	1200/Hr	300/Hr	600/Hr	300/Hr	300/Hr	120/Hr
Mechanical Life	2.5 Million	0.25 Million	2.5 Million	0.25 Million	1 Million	0.20 Million	0.25 Million	
Electrical Life	0.25 Million		0.25 Million		0.20 Million		0.10 Million	
Impulse Withstand	60 kV						75 kV (95 kV)****	
Dielectric Strength	18.2kV, 1 Minute		18.2kV, 1 Minute		18.2kV, 1 Minute		35.75 kV (42 kV)***, 1 Minute	
Pick-up Voltage	85% Hot to 70% Cold AC or DC							
Drop-out Voltage	70% Hot to 60% Cold AC or DC							
Tripping Voltage	60% or Less of Coil Rating DC (Cold)							

Notes:
* 13.8 kV maximum for capcitor switching (5000 kVAR max. with a 6% series reactor)
** The rated inerrupting current was tested at 12 kV
*** Special withstand voltage (42 kV for 1 minute) available by request
**** 95kV BIL with Station Class Arresters. Consult factory for further details

Vacuum Contactors

Medium Voltage

Vacuum Contactor Specifications

Model		HCV-5HA	HCV-5HAL	HCV-7HA	HCV-7HAL	HCV-6KAU	HCV-6KALU	CV-10HA(L)	CV-10HB(L)
Control Voltage	Standard	120 VAC, 50/60 Hz				115 to 240 VAC/ 125 to 250 VDC		100 to 240 VAC/ 125 to 250 VDC	
	Optional *	240 VAC/125 VDC/250 VDC				-		-	
	Tripping	-	24, 32, 48, 125, 250 VDC	-	24, 32, 48, 125, 250 VDC	-	24, 32, 48, 125, 250 VDC	-	125 VDC
Control Circuit Burden	Closing	5.4 A Peak @ 120 VAC 670 VA (AC), 700 W (DC)				6 to 7.0 A @ 120 VAC 840 VA (AC), 875 W (DC)		7.2 A Peak @ 120 VAC 864 VA (AC), 900 W (DC)	
	Holding	0.12 A Avg. @ 120 VAC 85 VA (AC), 85 W (DC)				0.8 to 1 A @ 120 VAC 48 VA		0.16 A Avg. @ 120 VAC 80 VA (AC), 90 W (DC)	
	Tripping**	4.8 A Peak @125 VDC							
Auxiliary Contact Ratings	Arrangement	3NO-3NC	2NO-2NC	3NO-3NC	2NO-2NC	3NO-3NC	2NO-2NC	4NO-2NC	2NO-1NC
	Current	10 A (A600)							
	Voltage	600 V Maximum, 48 V Minimum							
	AC	720 VA (P.F. 0.35)							
	DC	60 W (L/R 150 ms)							
Application Conditions	Altitude w/o Derating	Lower than 3300 ft (1000 m)							
	Ambient	-5° to 40°C							
	Relative Humidity	45 to 85%							
	Vibration	Maximum 20 Hz to 1 G							
	Shock	Maximum 30 G							
Weight in lbs. (kg)		43 (19.5)	44 (20.0)	44 (19.5)	45 (20.0)	60 (27)	62 (28)	88 (40)	91 (41)

Notes:

* Adjustable via switch settings on the electronic drive unit

** Trip circuit burden applies to all latched type contactors only

Vacuum Contactors

Medium Voltage
Vacuum Contactor Specifications

Medium Voltage Application Table

Model	System Voltage	0.8 PF Ind./ Syn. Motor	1.0 PF Syn. Motor	Three-Phase Transformer	Three-Phase Capacitor
HCV-5HA(L) HCV-7HA(L) (400 A)	2.2 to 2.5 KV	1750 HP	2000 HP	1500 KVA	1500 KVAR
	3 to 3.3 KV	2250 HP	2500 HP	2000 KVA	2000 KVAR
	4 to 5 KV	3000 HP	3500 HP	3000 KVA	2000 KVAR
	6 to 6.6 KV	4500 HP	5000 HP	4000 KVA	2000 KVAR
HCV-6KA(L)U (720 A)	2.2 to 2.5 KV	2500 HP	3000 HP	2500 KVA	2000 KVAR
	3 to 3.3 KV	3000 HP	3500 HP	3500 KVA	2000 KVAR
	4 to 5 KV	4500 HP	5000 HP	4500 KVA	2000 KVAR
	6 to 6.6 KV	6000 HP	7000 HP	7000 KVA	2000 KVAR
CV-10HA(L) (400 A)	6.9 to 7.2 KV	3500 HP	4000 HP	3000 KVA	N/A
	10 to 12 KV	5500 HP	6000 HP	5500 KVA	
	13.8 KV	7000 HP	7500 HP	6500 KVA	
CV-10HB(L) (400 A Continuous, 230 A Breaking)	2.2 to 2.5 KV	N/A	N/A	N/A	1500 KVAR
	3 to 3.3 KV				2000 KVAR
	4 to 5 KV				2000 KVAR
	6 to 6.6 KV				3000 KVAR
	6.9 to 7.2 KV				3000 KVAR
	10 to 13.8 KV				5000 KVAR

Notes:
- The above table is based on general load data and standard application.
- Lower limitations may apply on specific applications (i.e. applications above 3,000 meter elevations).

Vacuum Contactors

Low & Medium Voltage Vacuum Contactor Pricing

Model	Description	Application	List Price
HCV-5HA	400 A, 2.3 to 7.2 KV Non-Latched Type	Motors, Distribution Loads, Transformer/Capacitor Switching	$8,000
HCV-5HAL-xx*	400 A, 2.3 to 7.2 KV Latched Type	Motors, Distribution Loads, Transformer/Capacitor Switching	$9,500
HCV-7HA	400 A, 2.3 to 7.2 KV Non-Latched Type	Motors, Distribution Loads, Transformer/Capacitor Switching	$7,300
HCV-7HAL-x*	400 A, 2.3 to 7.2 KV Latched Type	Motors, Distribution Loads, Transformer/Capacitor Switching	$8,500
HCV-6KAU	720 A, 2.3 to 7.2 KV Non-Latched Type	Motors, Distribution Loads, Transformer/Capacitor Switching	$14,000
HCV-6KALU-xx*	720 A, 2.3 to 7.2 KV Latched Type	Motors, Distribution Loads, Transformer/Capacitor Switching	$16,000
CV-10HA	400 A, 10 to 15 KV Non-Latched Type	Motors, Distribution Loads, Transformer	$14,000
CV-10HAL	400 A, 10 to 15 KV Latched Type	Distribution Loads, Transformer Switching	$16,000
CV-10HB	400 A, 10 to 13.8 KV Non-Latched Type	Capacitor Switching	$17,000
CV-10HBL	400 A, 10 to 13.8 KV Latched Type	Capacitor Switching	$19,000
HCV-1JBU	600 A, 208 to 1500 V Non-Latched Type	Motors, Distribution Loads, Transformer/Capacitor Switching	$7,800
HCV-1KAU	720 A, 208 to 1500 V Non-Latched Type	Motors, Distribution Loads, Transformer/Capacitor Switching	$14,000
HCVR-1JBU	Reversing Contactor Assembly, 600 A, 208 to 1500 V Non-Latched Type	Reversing Motors	$24,000
HCVR-1KAU	Reversing Contactor Assembly, 720 A, 208 to 1500 V Non-Latched Type	Reversing Motors	$36,000

Notes:

* For HCV-5HAL and HCV-6KALU, replace "xx" in model number with close and trip voltage codes.
First "x" is closing voltage and second "x" is trip coil voltage. For HCV-7HAL, replace "x" in model number with trip coil voltage only.

Latched Contactor Voltage Codes

Close Voltage	Code	Trip-Coil Voltage	Code
1	120 VAC	1	125 VDC
2	240 VAC	2	250 VDC
3	125 VDC	3*	24 VDC
4	250 VDC	4*	32 VDC
		5*	48 VDC

Notes:

* For 24 VDC, 32 VDC, and 48 VDC trip, add $2,000 to list price shown in table. Adder includes auxiliary contact arc killer.

Vacuum Contactors

Low & Medium Voltage
Vacuum Contactor Accessories

Model Number	Description	List Price
CIT-10QA	Capacitor Trip Device Used for Latched-type Vacuum Contactor or Vacuum Circuit Breaker when DC Power is Not Available. Charges from AC Power and Supplies DC Power to Trip Coil	$1,800
4Z9G0334G001	AC/DC Control Power Rectifier Converts 120/240 VAC Input to 125/520 VDC to Power Trip Coil on Latched-type Vacuum Contactor or Control Power for a Vacuum Circuit Breaker	$400
NV60K304T1	Surge Suppressor: Three-phase CR Surge Suppressor for 3.3 to 7.2 kV System	$2,600
NV95K304T1	Surge Suppressor: Three-phase CR Surge Suppressor for 10 to 15 kV System	$6,900
2C9G0059G002	Mechanical Interlock for HCV-5HA(L)	$1,100
2C9G0068G001	Mechanical Interlock for HCV-6KA(L)U	$1,100
3Z9G0119G001	Latched-contactor Modification Kit for HCV-5HA & HCV-6KAU; 125 VDC Trip-coil	$800
3Z9G0119G002	Latched-contactor Modification Kit for HCV-5HA & HCV-6KAU; 250 VDC Trip-coil	$800
3Z9G0119G003	Latched-contactor Modification Kit for HCV-5HA & HCV-6KAU; 24 VDC Trip-coil	$1,600
3Z9G0119G004	Latched-contactor Modification Kit for HCV-5HA & HCV-6KAU; 30/32 VDC Trip-coil	$1,600
3Z9G0119G005	Latched-contactor Modification Kit for HCV-5HA & HCV-6KAU; 48 VDC Trip-coil	$1,600
PC18330P671	Latched-contactor Auxiliary Contact Arc Killer for HCV-5HAL & HCV-6KAUL; Used with 24/32/48 VDC Trip-coil Models	$400
5P9A2593P001	B9 Lubricating Grease (30 g tube)	$40

Low Voltage Solid State Starters
TE2 Series

NEW PRODUCT

Toshiba's low voltage TE2 Series is a high-end, digitally programmable, reduced voltage solid state starter. This heavy-duty starter provides stepless soft starting of three-phase AC induction motors, which protects mechanical components from excessive torque stress as well as electrical systems from the effects of high motor inrush currents. Toshiba's TE2 Series solid state starter sets a new standard in control and protection for critical motors and loads.

Product Scope

18 to 1250 A
200 to 600 V

Highlights

NEW FOR 2019

- **3-Phase Voltage Metering**
- **Power Factor Indications and Protections**
- **4 - 20 mA Analog Output**
- Built-In Bypass Contactor
- Communications: RS485 Modbus RTU
- Advanced Motor Protection
- Narrow Width for Motor Control Center (MCC) Mounting
- Remote Keypad Mounting
- Pull-Apart Control Terminals for Easy Assembly & Wiring
- Smooth, Stepless Soft Start
  - Voltage Ramp Start: 1 to 120 Seconds
  - Initial Voltage: 0 to 100%
- Soft Stop
  - Stop Voltage: 0 to 100%
- Deceleration/Pump Control
- Current Limit: 200 to 600%
- Overload Capacity: 500% for 60 Seconds
- Undercurrent
- Overcurrent
- Jog Mode
- Three Programmable Output Relays
- Two-Wire or Three-Wire Control Standard
- 120 Vac Control Voltage

Standard Features

- UL Listed in US & Canada
- Four-Digit EOI Display
- Start & Run Protection
- Residual Ground Fault
- Retentive Thermal Memory
- Overload Reset: Manual or Automatic
- Phase Loss (Single-Phase)/Imbalance (5 to 30%)
- Electronic Overload
- Shorted SCR
- Shorted Load
- Over-Temperature

Low Voltage Solid State Starters

TE2 Series Pricing

TE2 Solid State Starter Pricing — Open Chassis Type

Model Number	Max. Amps	Nominal Motor Rating 50/60 Hz								List Price
		208 V/HP		230 V/HP		460 V/HP		575 V/HP		
		Shunt Bypass	Start Bypass	Shunt Bypass	Start Bypass	Shunt Bypass	Start Bypass	Shunt Bypass	Start Bypass	
TE2-18-BP	18	5	3	5	5	10	10	15	10	$1,750
TE2-28-BP	28	7.5	7.5	7.5	7.5	20	15	25	20	$1,800
TE2-39-BP	39	10	10	10	10	25	25	30	30	$1,850
TE2-48-BP	48	15	10	15	15	30	30	40	30	$1,900
TE2-62-BP	62	20	15	20	20	40	40	60	50	$1,950
TE2-78-BP	78	25	20	25	25	60	50	75	60	$2,000
TE2-92-BP	92	30	25	30	30	60	60	75	75	$2,300
TE2-112-BP	112	30	30	40	30	75	75	100	75	$2,800
TE2-150-BP	150	40	40	50	50	100	100	125	-	$3,600
TE2-160-BP	160	50	40	60	50	125	100	150	-	$4,000
TE2-210-BP	210	60	60	75	60	150	150	200	150	$5,200
TE2-275-BP	275	75	60	100	75	200	150	200	150	$6,100
TE2-361-BP	361	125	75	125	125	300	250	350	300	$6,600
TE2-450-BP	450	150	125	150	150	350	300	450	300	$7,400
TE2-550-BP	550	150	150	200	200	450	400	500	500	$9,300
TE2-600-BP	600	200	200	200	200	500	500	600	600	$9,500
TE2-862-BP	862	250	250	300	300	600	500	700	600	$13,600
TE2-900-BP	900	300	250	350	300	700	600	900	600	$15,900
TE2-1006-BP	1006	350	300	400	400	800	800	1000	900	$26,700
TE2-1250-BP	1250	450	350	500	450	1000	900	1200	1000	$33,000

Notes:
- Data is based on NEC Table 430-150, full-load current three-phase motors.
- Size soft starter based on actual motor nameplate FLA.
- Chassis dimensions are on page 413.
- Accessories are on page 414.

Low Voltage Solid State Starters
TE-H Series

There is no need to compromise on performance or features. The TE-H Series incorporates Toshiba's TE Series SSS into a heavy-duty enclosure that is ready to work right out-of-the-box. Expect the full benefits of reliable soft starting, unsurpassed motor/load protection, and control flexibility -- all in one complete package that is readily stocked in many ratings.

Product Scope

21 to 1080 A
200 to 600 V

Highlights

- Type 12/4 Enclosure
- Circuit Breaker with Door Operator (Models 45 to 1080)
- Fusible Disconnect Switch with Fuses (Models 21 to 40)
  - New 65 kAIC Rating Standard
- For new 65kAIC rating (Models 45 to 600), consult factory
- Surge Arrestor
- Built-In Full Rated Bypass Contactor
- Communications: RS485 Modbus RTU

TE-H Smart Door

Standard Features

- Includes TE2 Series SSS
- UL Listed in US & Canada
- Four-Digit EOI Display
- 120 V Control Voltage (CPT Included)
- Smart Door
  - Door Mounted Keypad
  - Emergency Stop Button
  - Local/Off/Remote Switch
  - Start/Stop Button

Options See page 413

- Soft Start or Across-the-Line Switch
- Communications: Ethernet, DeviceNet, Profibus, DP, Profinet
- Enclosure Space Heater & Thermostat
- RTD Monitor/Relay (12 RTD Inputs)
- Type 4X Stainless Steel Enclosure (Consult Factory)
- Floor Stand (Frame 2 Only)

Low Voltage Solid State Starters

TE-H Series Pricing

TE-H Heavy Duty Combination Type

Model Number	Nominal Motor HP Rating				Maximum KW Rating			List Price	Enclosure Frame Size
	200 V/HP	230 V/HP	460 V/HP	575 V/HP	220 V/KW	380 V/KW	415 V/KW		
TE-H-21-CB-*	7.5	7.5	10 to 15	15 to 20	5.5	11	11	$4,700	1
TE-H-27-CB-*	10	10	20 to 25	25 to 30	7.5	15	15	$4,800	1
TE-H-40-CB-*	10	15	30	30	11	18.5	18.5	$4,900	1
TE-H-45-CB-*	15	20	40	40 to 50	15	30	30	$5,000	1
TE-H-55-CB-*	20	25	50	60	18.5	37	30	$5,200	1
TE-H-68-CB-*	25	30	60	-	22	45	37	$5,300	1
TE-H-96-CB-*	30	30	75	75	30	55	60	$5,700	1
TE-H-125-CB-*	40	40 to 50	100	-	45	75	75	$6,500	1
TE-H-156-CB-*	50 to 60	60	125 to 150	100 to 150	55	90	90	$7,700	2
TE-H-220-CB-*	60	75	150	150	55	110	132	$8,600	2
TE-H-248-CB-*	75 to 100	100 to 125	200 to 250	200 to 300	75	132	132	$10,400	2
TE-H-312-CB-*	125	150	300	300	110	160	160	$11,500	2
TE-H-400-CB-*	125	150	300	300	-	200	250	$12,300	2
TE-H-480-CB-*	150	200	400	350 to 500	-	-	-	$15,900	2
TE-H-600-CB-*#	150	250	500	600	-	-	-	$21,800	2
TE-H-690-CB-*	250	250	500	600	-	355	400	$22,100	2.5
TE-H-800-CB-*	250	300	600	600	-	450	500	$22,300	2.5
TE-H-960-CB-*	300	350 to 400	700 to 800	700 to 900	-	475	500	$34,900	3
TE-H-1080-CB-*	350	450	900	1000	-	565	600	$39,900	3

Notes:

- TE-H-600 is 1.0 S.F. rated. Use 690 model if 1.15 S.F. is required.

* - Replace with Line and Control Voltage code listed below:

1 = 208 V, 120 V Ctrl, 50/60 Hz
2 = 230 V, 120 V Ctrl, 50/60 Hz
3 = 380 V, 120 V Ctrl, 50/60 Hz
4 = 460 V, 120 V Ctrl, 50/60 Hz
5 = 575 V, 120 V Ctrl, 50/60 Hz
6 = 415 V, 120 V Ctrl, 50/60 Hz

Low Voltage Solid State Starters

TE2 & TE-H Series Dimensions/Weights/Factory Modifications

TE2 Series — Open Chassis Type

Model	Open-Chassis Type			
	Dimensions Inches (mm)			Approx. Weight lbs. (kg)
	H	W	D	
TE2-18-BP to TE2-48-BP	8.75 (216)	8.00 (203)	6.66 (169)	13 (5.9)
TE2-62-BP to TE2-112-BP	14.00 (355.6)	8.00 (203)	6.68 (170)	23 (10.4)
TE2-150-BP to TE2-160-BP	19.21 (487.9)	8.00 (203)	6.68 (170)	33 (15)
TE2-210-BP	28.50 (712.4)	12.50 (317.5)	9.04 (223)	130 (59)
TE2-275-BP				140 (63.5)
TE2-361-BP to TE2-450-BP				145 (65.8)
TE2-550-BP to TE2-600-BP	32.03 (813.6)	12.50 (317.5)	9.87 (250.7)	165 (74.8)
TE2-862-BP to TE2-900-BP	44.13 (1120)	25.5 (647.7)	11.86 (301)	315 (143)
TE2-1006-BP	46.56 (1182)	28.2 (716)	13.00 (330)	550 (250)
TE2-1250-BP	46.56 (1182)	28.2 (716)	13.00 (330)	750 (340)

TE-H & TE-B Series

Frame Size	Enclosure	H	W	D	Rating
		Dimensions (in.)			
1	Wall Mount	37	15	12	N4/12
2	Wall Mount	48	33	16	N4/12
2.5	Floor Standing	87	32	24	N4/12
3	Floor Standing	90	39.5	24	N4/12

TE-H & TE-B Series Factory Installed Modifications

Option Code	Modification Description	List Price
RX	Emergency Bypass - Door-Mounted SS/ATL Switch with Solid State Overload Relay	$1,000
H	Heater with Thermostat	$1,200
RTD	TE-RTD12 RTD Monitor/Relay - Includes Door-Mounted Keypad/Display	$4,400
65K	For 65 kAIC Rating	CF

Communications Option Code	Modification Description	List Price
XVS1	Provides Modbus RTU over Ethernet (Modbus TCP) & Internet (TCP/IP) over Ethernet	$3,000
XVS2	Provides Modbus RTU over Ethernet (Modbus TCP)	$3,000
CO	Provides CANopen Communications	$4,500
DN	Provides DeviceNet™Communications	$4,500
EI	Provides EtherNet/IP Communications	$5,500
PB	Provides PROFIBUS Communications	$3,000
PN	Provides PROFINET Communications	$4,500

Low Voltage Solid State Starters

TE2 Series Accessories

TE2 Series Accessories

Part Number	Description	Model	List Price
TE-KP12-KIT2-1	Remote Display Kit - Type 1, 12, & 4X with 1-Meter Cable	TE2-18 to TE2-48	$250
TE-KP12-KIT2-2	Remote Display Kit - Type 1, 12, & 4X with 2-Meter Cable		$270
TE-KP12-KIT2-3	Remote Display Kit - Type 1, 12, & 4X with 3-Meter Cable		$300
TE-KP12-KIT-1	Remote Display Kit - Type 1, 12, & 4X with 1-Meter Cable	TE2-62 & above	$360
TE-KP12-KIT-2	Remote Display Kit - Type 1, 12, & 4X with 2-Meter Cable		$380
TE-KP12-KIT-3	Remote Display Kit - Type 1, 12, & 4X with 3-Meter Cable		$400
SSS TOOL	Software for Programming, Commissioning, Monitoring Includes CD & USB to RS485 Converter	All	$650
66-0103B	Floor Stand Kit for Enclosure Frame Size 2 (Adds 18” to Height)	TE-H-156 to 600	$900

Notes:
- Remote display cable assembly includes connectors on each end.
- TE2 open chassis units do not come with lugs. Soft starters up to 60A rating are provided with terminal bus tabs as standard.

Lug Kits Part Number	Wire Size	Model	List Price
71-0228	#14-#4 (1/ph, Line & Load)	TE2-18 to TE2-48	$60
71-0229	#14-1/0 (1/ph, Line & Load)	TE2-62 to TE2-112	$100
71-0230	#14-3/0 (1/ph, Line & Load)	TE2-150 to TE2-160	$200
71-0231	#6-250MCM (2/ph, Line & Load)	TE2-210 to TE2-361	$300
71-0232	#6-500MCM (2/ph, Line & Load)	TE2-450 to TE2-600	$350
71-0251	#6-600MCM (3/ph, Line & Load)	TE2-862 to TE2-900	$1,100
71-0252	#6-600MCM (4/ph, Line & Load)	TE2-1006 to TE2-1250	$1,200

Protection Relays

Part Number	Description	List Price
RX-5	Solid State Motor Protection Relay w/Residual Ground Fault Protection	$900
RX-KP4-KIT-2	Remote Display Kit for RX-5 Relay - Type 1, 12, & 4X w/2-Meter Cable	$280
TE-RTD12	12-Channel Motor RTD Monitor w/Differential Protection	$1,840
TE-RTD-KP12-KIT	Remote Display Kit for TE-RTD12 Relay - Type 1, 12, & 4X w/3-Meter Cable	$240

Low Voltage Solid State Starters
Touchscreen Panel

NEW PRODUCT

Intelligent Color Touchscreen Interface.

New Touchscreen,
showing RX Relay display in English.

Product Scope

Combines multiple relays into one unified interface
Can be used on various starter series
Simplifies setup using a single touch screen
Plain text interaction in any of the 8 supported languages

Highlights

- Type 1, 12, & 4X Rated
- One HMI for Multiple Products
  - TE2 Low Voltage Solid State Starter
  - RX Solid State Protection Relay
  - TE-RTD12 RTD Monitor/Relay
  - JKSSS Medium Voltage Solid State Starter
- Multiple Language Support (Additional Languages Coming)

Medium Voltage:	**Low Voltage:**
- English	- English
- Russian	- Russian
- Chinese	- Chinese
- Spanish	- Spanish
- German	- German
- French	- Polish

New Touchscreen,
showing RX Relay display in Spanish.

Part Number	Description	List Price
TE2-SCREEN-KIT	For TE2 Series (Low Voltage Solid State Starter)	$1,200
JKSSS-SCREEN-KIT	For JKSSS (Medium Voltage Solid State Starter)	$1,200

Touchscreen showing TE-RTD Relay
with all 12 RTD temperatures.

Low Voltage Solid State Starters
TE-B Series

NEW PRODUCT

Basic Heavy-duty Soft Starter.

Product Scope

21 to 600 A
200 to 600 V

Highlights

- Basic Model
- Uses TE2 Chassis
- Type 12/4 Enclosure
- Start Rated Bypass Contactor
- Available in Fused Disconnect, Circuit Breaker, or Main Lug Only Models
- Includes Control Power Transformer (120 Vac)
- Includes Basic Door Mounted Controls
  - Illuminated E-Stop Pushbutton
  - Local/Off/Remote Selector Switch
  - Start/Stop Pushbuttons (Operates in Hand Mode)
  - Run Pilot Light (Operates in Hand and Remote Modes)
  - Power On Pilot Light
  - Reset Fault Light/Reset Pushbutton
- Includes I/O Board for End User Connections
- Communications: RS485 Modbus RTU
- Surge Device Installed
- 65 kA Rated Units Available. Consult Factory

Options See page 413

- Soft Start or Across-the-Line Switch
- Communications: Ethernet, DeviceNet, Profibus, DP, Profinet
- Enclosure Space Heater & Thermostat
- RTD Monitor/Relay (12 RTD Inputs)
- Type 4X Stainless Steel Enclosure (Consult Factory)
- Floor Stand (Frame 2 Only)
- Touchscreen Keypad

Low Voltage Solid State Starters

TE-B Series Pricing

TE-B Heavy Duty Combination Type

Combination Type Model Number	Nominal Motor HP Rating				Maximum KW Rating			List Price	Enclosure Frame Size
	200 V/HP	230 V/HP	460 V/HP	575 V/HP	220 V/KW	380 V/KW	415 V/KW		
TE-B-21-FS-*	7.5	7.5	10 to 15	15 to 20	5.5	11	11	$4,300	1
TE-B-27-FS-*	10	10	20 to 25	25 to 30	7.5	15	15	$4,400	1
TE-B-40-FS-*	10	15	30	30	11	18.5	18.5	$4,500	1
TE-B-45-CB-*	15	20	40	40 to 50	15	30	30	$4,600	1
TE-B-55-CB-*	20	25	50	60	18.5	37	30	$4,800	1
TE-B-68-CB-*	25	30	60	-	22	45	37	$4,900	1
TE-B-96-CB-*	30	30	75	75	30	55	60	$5,200	1
TE-B-125-CB-*	40	40 to 50	100	-	45	75	75	$5,900	1
TE-B-156-CB-*	50 to 60	60	125 to 150	100 to 150	55	90	90	$7,000	2
TE-B-220-CB-*	60	75	150	150	55	110	132	$7,800	2
TE-B-248-CB-*	75 to 100	100 to 125	200 to 250	200 to 300	75.0	132	132	$9,500	2
TE-B-400-CB-*	125	150	300	300	-	200.0	250.0	$11,100	2
TE-B-480-CB-*	150	200	400	350 to 500	-	-	-	$14,400	2
TE-B-600-CB-*#	150	250	500	600	-	-	-	$19,700	2

Notes:
"FS" = Fused Disconnect Switch w/Fuse, "CB" = Circuit Breaker.

TE-B Heavy Duty Non-Combination Type

Combination Type Model Number	Nominal Motor HP Rating				Maximum KW Rating			List Price	Enclosure Frame Size
	200 V/HP	230 V/HP	460 V/HP	575 V/HP	220 V/KW	380 V/KW	415 V/KW		
TE-B-21-MLO-*	7.5	7.5	10 to 15	15 to 20	5.5	11	11	$3,800	1
TE-B-27-MLO-*	10	10	20 to 25	25 to 30	7.5	15	15	$3,900	1
TE-B-40-MLO-*	10	15	30	30	11	18.5	18.5	$4,000	1
TE-B-45-MLO-*	15	20	40	40 to 50	15	30	30	$4,100	1
TE-B-55-MLO-*	20	25	50	60	18.5	37	30	$4,200	1
TE-B-68-MLO-*	25	30	60	-	22	45	37	$4,300	1
TE-B-96-MLO-*	30	30	75	75	30	55	60	$4,700	1
TE-B-125-MLO-*	40	40 to 50	100	-	45	75	75	$5,100	1
TE-B-156-MLO-*	50 to 60	60	125 to 150	100 to 150	55	90	90	$6,200	2
TE-B-220-MLO-*	60	75	150	150	55	110	132	$6,300	2
TE-B-248-MLO-*	75 to 100	100 to 125	200 to 250	200 to 300	75.0	132	132	$8,000	2
TE-B-400-MLO-*	125	150	300	300	-	200.0	250.0	$9,200	2
TE-B-480-MLO-*	150	200	400	350 to 500	-	-	-	$12,100	2
TE-B-600-MLO-*#	150	250	500	600	-	-	-	$14,500	2

Notes:
"MLO" = Main Lug Only (No Disconnect) Available Options - See Page 413.
TE-B-600 is 1.0 S.F. rated. Use TE-H-690 model if 1.15 S.F. is required.

* Replace with Line and Control Voltage code listed below:
1 = 208 V, 120 V Ctrl, 50/60 Hz
2 = 230 V, 120 V Ctrl, 50/60 Hz
3 = 380 V, 120 V Ctrl, 50/60 Hz
4 = 460 V, 120 V Ctrl, 50/60 Hz
5 = 575 V, 120 V Ctrl, 50/60 Hz
6 = 415 V, 120 V Ctrl, 50/60 Hz

Vacuum Circuit Breakers
VK/HVK Series

The VK and HVK Series circuit breakers combine Toshiba's quality and state-of-the-art vacuum technology to provide full range of voltages and interrupting ratings with the highest reliability and service for worldwide applications.

Product Scope

5 to 15 KV
1200, 2000, & 3000 A
250 to 1000 MVA

Highlights

- VK & HVK Series
- Compact & Lightweight
- Available In:
  - Fixed Style
  - Drawout Style
  - Manual Operated
  - Motor Operated
- Designed for Safety with Electrical & Mechanical Interlocks
- Excellent Breaking Performance
- Minimized Maintenance & Inspection
- Front-Mounted with Circuit Control Components on Printed Circuit Board

Standard Features

- Meets or Exceeds ANSI Standard
- NEMA Enclosure
- Rugged & Simple Primary Disconnects
- Heavy Duty Auxiliary Contacts
- High-Tech Control Circuit Board
- Rugged Steel Frame
- Heavy Duty & Glass Polyester High-Performance Insulation Barrier

Vacuum Circuit Breakers

VK/HVK Series Specifications

Rating & Specifications with Voltage Range Factor K=1.0

(Symmetrical Current Rating Basis, ANSI C37.06-1997)

Identification				Insulation Level		Current		
Model Number	Nominal RMS Voltage Class (KV)	Max. RMS Volts	Nominal Three-Phase Class MVA	Rated Low Freq. Withstand (KV, RMS)	Rated Impulse Withstand Voltage (KV, CREST)	Cont. Current Rating (A, RMS)	RMS Short Circuit Current (KA, RMS)	Close & Latch Capability (KA, PEAK)
HVK-6M32A	4.16	4.76	250	19	60	1200	29	58
HVK-6P32A	4.16	4.76	250	19	60	2000	29	58
HVK-6M40A	4.16	4.76	350	19	60	1200	41	66
HVK-6P40A	4.16	4.76	350	19	60	2000	41	66
VK-6M50	4.16	4.76	350	19	60	1200	41	78
VK-6P50	4.16	4.76	350	19	60	2000	41	78
VK-6Q50	4.16	4.76	350	19	60	3000	41	78
HVK-8M40A	7.2	8.25	500	36	95	1200	33	66
HVK-8P40A	7.2	8.25	500	36	95	2000	33	66
HVK-10M25A2	13.8	15	500	36	95	1200	18	37
HVK-10P25A2	13.8	15	500	36	95	2000	18	37
HVK-10M40A	13.8	15	750	36	95	1200	28	58
HVK-10P40A	13.8	15	750	36	95	2000	28	58
HVK-10M40A	13.8	15	1000	36	95	1200	37	59
HVK-10P40A	13.8	15	1000	36	95	2000	37	59
VK-10M50	13.8	15	1000	36	95	1200	37	77
VK-10P50	13.8	15	1000	36	95	2000	37	77
VK-10Q50	13.8	15	1000	36	95	3000	37	77

Notes:

- Maximum voltage for which the breaker is designed and the upper limit of operation are based on ANSI C84.1.
- Rated interrupting time: three cycles (all above breakers).
- Rated permissible tripping delay time: two seconds (all above breakers).

Vacuum Circuit Breakers

VK/HVK Series

Part Numbering Convention

Ordering Information: Use the following part numbering convention to configure the breaker when placing your order. For additional factory installed options, add the appropriate option code on the end as in the example below.

Example is a HVK series breaker rated 4.16 KV, 1200 A, 29 KA, Fixed-Type, with 125 VDC Close/Charge/Trip and 120 VAC undervoltage release.

Example Part Number:	HVK-	6	M	32	F	V	V	-UV

Series

Voltage Class:
6 — 4.2 KV
8 — 7.2 KV
10 — 15 KV

Continuous Amps:
M — 1200 A
P — 2000 A
Q — 3000 A

Interrupting Capability:
25 — 18 KA
32 — 29 KA
40 — 28 to 41 KA
50 — 37 to 41 KA

Breaker Configuration:
- — Drawout
F — Fixed

Closing/Charging Voltage:
V — 125 VDC

Tripping Voltage:
V — 125 VDC

Factory Modification:
N/A — None
UV — Undervoltage

Vacuum Circuit Breakers

VK/HVK Series Breaker Pricing & Factory Modifications

Model Number	Nominal RMS Voltage Class (KV)	Cont. Current Rating (A, RMS)	Three-Phase Class MVA	RMS Short Circuit Current (KA, RMS)	Drawout-Type Breaker List Price	Fixed-Type Breaker List Price
HVK-6M32A-VV	4.16	1200	250	29	$39,500	$41,000
HVK-6P32A-VV	4.16	2000	250	29	$49,500	$51,000
HVK-6M40A-VV	4.16	1200	350	41	$40,000	$41,500
HVK-6P40A-VV	4.16	2000	350	41	$49,900	$51,400
VK-6M50-VV	4.16	1200	350	41	CF	CF
VK-6P50-VV	4.16	2000	350	41	CF	CF
VK-6Q50-VV	4.16	3000	350	41	CF	CF
HVK-8M40A-VV	7.2	1200	500	33	$40,500	$42,000
HVK-8P40A-VV	7.2	2000	500	33	$50,500	$52,000
HVK-10M25A2-VV	13.8	1200	500	18	$41,500	$43,000
HVK-10P25A2-VV	13.8	2000	500	18	$51,500	$53,000
HVK-10M40A-VV	13.8	1200	750/1000	28	$41,500	$43,000
HVK-10P40A-VV	13.8	2000	750/1000	28	$51,500	$53,000
VK-10M50-VV	13.8	1200	1000	37	CF	CF
VK-10P50-VV	13.8	2000	1000	37	CF	CF
VK-10Q50-VV	13.8	3000	1000	37	CF	CF

Notes:
- Breakers sold without cells are not for use in applications involving breaker retrofits.
- Racking and charging handles are not included with breaker or cell and must be ordered separately. See breaker accessories.
- CF: Consult Factory.

VK/HVK Series Breaker Factory Modifications

Modification	Breaker Series	Code	List Price
Under Voltage Release (120 VAC)	VK & HVK	UV	$1,500
MOC Rod	VK & HVK	MOC	$3,000

Vacuum Circuit Breakers
HV6 Series

Toshiba's HV6 series circuit breakers are designed specifically for medium voltage, low-capacity power receiving and transforming facilities. The HV6 series low-surge features and compact size make it ideal for a wide variety of applications, including mobile power centers and portable substations.

Product Scope

600 A
2300 to 7200 V
12.5 kA

Highlights

- Compact & Lightweight
- Available In:
  - Fixed Style
  - Drawout Style
  - Manual Operated
  - Motor Operated
- Designed for Safety with Electrical & Mechanical Interlocks
- Excellent Breaking Performance
- Minimized Maintenance & Inspection
- Made in Houston, Texas

Standard Features

- Front-Mounted Operation Counter
- Conforms to JIS C 4603 & JEC-2300
- Low Surge Interrupters
- Low Chopping-Current
- Multiple Main Terminal Configurations
- Power Terminals Available in Two Directions
  - U-Vertical
  - L-Horizontal

Vacuum Circuit Breakers

HV6 Series

Part Numbering Convention

Ordering Information: Use the following part numbering convention to configure the breaker when placing your order. For additional factory installed options, add the appropriate option code on the end as in the example below.

Example is an HV6, fixed-type, motor-operated, with power stabs horizontal, with 125 VDC close/charge/trip.

HV6CS-	ML		-V		V			
Model	Type		Closing-Coil Volts		Trip-Coil Volts		Factory Modification	
Version	Code	Configuration/ Operation	Code	Volts	Code	Volts	Code	Mod.
HV6CS	U	Fixed/Manual Operation	A	None (Manually Operated)	S	24/32 VDC	-R	Replaces V16 Series Fixed-Mount Version (Same Faceplate Dimensions)
	L	Fixed/Manual Operation			V	125 VDC		
HV6CS	MU	Fixed/Motor Operation	V	125 VDC	S	24/32 VDC	-R	Replaces V16 Series Fixed-Mount Version (Same Faceplate Dimensions)
	ML	Fixed/Motor Operation						
	MLD	Drawout/Motor Operation			V	125 VDC	Not Applicable on Drawout Version	

Notes:

- Factory modification "-R" includes a special mounting faceplate on the HV6 so it can replace a V16 without enclosure modification. The front-facing of the HV6 is smaller than the V16. This modification is applicable for the fixed-type models only, if the faceplate was used for mounting or if the face was protruding though the enclosure. This is a no-cost adder.

Vacuum Circuit Breakers

HV6 Series
Specifications & Pricing

Model Number		HV6CS-U	HV6CS-L	HV6CS-MU	HV6CS-ML	HV6CS-MLD
Maximum Continuous Current Rating		600 A				
Rated Voltage		2.4 to 7.2 KV				
Interrupting Current (0.15 P.F.)		12.5 KA (Sym.)				
Rated Frequency		50/60 Hz				
Transient Recovery Voltage		0.32 KV/Microsecond at 4.2 KV & Above, Below 0.16 KV/Microsecond				
Making Current		31.5 KA (Peak)				
Short-time Current		12.5 KA for 2 Seconds				
Interrupting Time		Less than 3 Cycles				
Insulation Level (Basic Impulse Level)		60 KV				
AC Withstand Voltage		22 KV for 1 Minute				
Operation Duty		Open 1 Minute; Closed/Open 3 Minutes; Closed/Open				
Mechanical Life		10,000 Operations				
Load-Switching Life		10,000 Operations				
Auxiliary Contacts	Form	2NO-2NC				
	Cont. Current	10 A				
	Voltage	300 V Maximum; 48 V Minimum				
	Interrupting	AC: 700 VA at PF 0.35/DC: 60 W at L/R 150 ms				
Altitude (Above Derate by ANSI C37.04)		3300 ft (1000 m)				
Ambient Temperature		-5° to 40 C°				
Installation		Fixed				Drawout
Operation		Manual Closing		Motor Spring Closing		
Opening Time		30 ms (Typical)				
No-Load Closing Time		-		30 ms		
Charging	Voltage/Current	-		125 VDC/2.5 A Peak (0.9 A Average)		
Closing	Voltage/Current	-		125 VDC/1.1 A		
Tripping	Voltage/Current	125 VDC/3.0 A		125 VDC/4.6 A		
Under Voltage Release		0.4 A at 120 VAC (Trip Voltage 24 to 72 VAC)				
Weight in lbs. (kg)		66 (30)		73 (33)		99 (45)
List Price*		**$8,900**	**$8,900**	**$9,900**	**$9,900**	**$11,900**

*Add $900 to list price for 24 to 32 VDC trip.

Vacuum Circuit Breakers

OEM Cell Pricing

OEM Cell Model Number	Used for Breaker	Cell Weight	List Price
HKA-10MS-K-X (Provision for KIRK Key interlock & Shutter Padlock)	HVK-6M32A HVK-6M40A HVK-8M40A HVK-10M25A2 HVK-10M40A	130 kg. 190 lb.	$15,000
HKA-10PS-K-X (Provision for KIRK Key Interlock & Shutter Padlock)	HVK-6P32A HVK-6P40A HVK-8P40A HVK-10P25A2 HVK-10P40A	150 kg. 330 lb.	$21,000
HKA-10MS1	VK-6M50 VK-10M50	150 kg. 330 lb.	$16,500
HKA-10PS1	VK-6P50 VK-10P50	170 kg. 380 lb	$22,500
HKA-6QS	VK-6Q50 VK-10Q50	290 kg. 640 lb	$28,000
H6A-HLS	HV6CS-MLD	20 kg. 44 lb	$5,600

Notes:

- For adding a key interlock, the key interlock kit (in breaker accessories) is required. The actual key is not included with the cell or the interlock kit and must be purchased separately.

Vacuum Circuit Breakers
Accessories

Model Number	Description	List Price
CIT-10QA	Capacitor-Trip Device Used for Latched-Type Vacuum Contactor or Vacuum Circuit Breaker when DC Power Not Available. Device Charges from AC Power & Supplies DC Power to Trip-Coil	$1,800
4Z9G0334G001	AC/DC Control Power Rectifier Converts 120/240 VAC Input to 125/250 VDC to Power Trip-Coil on Latched-Type Vacuum Contactor or Control Power for Vacuum Circuit Breaker	$400
NV60K304T1	Surge Suppressor; Three-Phase CR Surge Suppressor for 3.3 to 7.2 kV System	$2,600
NV95K304T1	Surge Suppressor; Three-Phase CR Surge Suppressor for 10 to 15 kV System	$6,900
4D9A2365G001	Charging Handle for VK & HVK Series	$750
4D9A2177G002	Racking Handle for VK & HVK Series	$730
4D9A2283G002	Key Interlock Kit without Key for HKA-10MS/PS Cells	$1,200
4D9A2283G003	Key Interlock Kit without Key for HKA-10MS1/PS1 Cells	$820
4D9A2177G008	Mechanism Operating Contacts (MOC 6a-6b) Kit for VK & HVK Breakers	$2,000
4D9A2177G012	Truck Operating Contacts (TOC 6a-6b) Kit for HKA Cells (VK & HVK Breakers)	$1,400
L-21CBS	Portable Lifter for Standard VK & HVK Series Breakers	$6,500
5P1B0404P013	Portable Lifter for VK 50 Series & 3000 A Breakers	$9,700
5P9A2593P001	B9 Lubricating Grease (30 g Tube)	$40

Industrial Automation
Operator Interface Stations
OIS PLUS Series Pricing

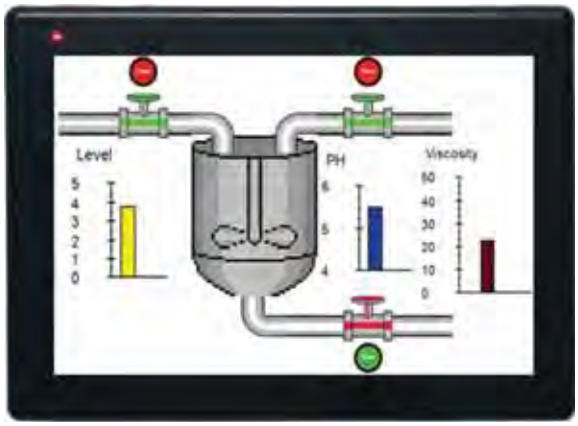

Operator Interface Stations

Part Number	Description	Price
OIS24	3.5” TFT Color Touchscreen 480x320 HVGA 24 VDC PS Requires OIL-DS Setup Software	$230
OIS42U PLUS	3” Tri-Color Touch Screen PLC Ladder Editor I/O - 8 DI, 6 RO, 2 PNP Transistor DO, 2 AI (Incls Thermo & RTD), 1 AO 24 VDC PS Requires OIL-DS Setup Software	$490
OIS45E PLUS	4.3” TFT Color Touchscreen Ethernet Port Accepts 3 Clip-On I/O Modules PLC Ladder Editor 24 VDC PS Requires OIL-DS Setup Software Built-in Web Server	$560
OIS70E PLUS	7” TFT 800 x 480 Color Touchscreen Ethernet Port PLC Ladder Editor Accepts 5 Clip-On I/O Modules 24 VDC PS Requires OIL-DS Setup Software Built-in Web Server	$850
OIS120A	12” TFT Color Touchscreen Ethernet Port No I/O, 24 VDC PS Requires OIL-DS Setup Software Built-in Web Server	$2,370

Notes:
- For availability of other displays, please contact TIC-PLC@toshiba.com

Industrial Automation

OIS PLUS Series Pricing

Clip-On I/O — Digital

Part Number	Description	Price
TRPDIX1600	16 Inputs 24 VDC (Sync/Source)	$100
TRPDIO0808P	8 Inputs 24 VDC (Sync/Source) 8 Outputs, Transistor, 24 VDC, PNP	$125
TRPDIO0808N	8 Inputs 24 VDC (Sync/Source) 8 Outputs, Transistor, 24 VDC, NPN	$120
TRPHIO0808P	8 Inputs (4 HS) 24 VDC (Sync/Source) 8 Outputs (2 PWM), Transistor, 24 VDC, PNP	$145
TRPHIO0808N	8 Inputs (4 HS) 24 VDC (Sync/Source) 8 Outputs (2 PWM), Transistor, 24 VDC, NPN	$145
TRPDOX0016N	16 Outputs, Transistor, 24 VDC, 0.5 A/each, NPN	$160
TRPDOX0016P	16 Outputs, Transistor, 24 VDC, 0.5 A/each, PNP	$160
TRPROX0012	12 Output Relays 24 VDC - 240 VAC 2 A Each, 5 A/Common	$140

Clip-On I/O — Analog

Part Number	Description	Price
TRPADT0400	4 Inputs 4 to 20 mA, 0 to10 V, 12 Bits	$220
TRPRTX0402	4 Inputs, 0 to 10 V, 4 to 20 mA, RTD, TC 2 Outputs, 0 to 10 V, 4 to 20 mA, 16 Bits Each	$335
TRPAIO0202L	2 Inputs, 0 to 10 V, 4 to 20 mA 2 Outputs, 0 to 10 V, 4 to 20 mA, 12 Bits Each	$260

Notes:

- For availability of other displays, please contact TIC-PLC@toshiba.com

Industrial Automation

OIS PLUS Series Pricing

Clip-On I/O — Digital

Part Number	Description	Price
TRPDIX1600	16 Inputs 24 VDC (Sync/Source)	$100
TRPDIO0808P	8 Inputs 24 VDC (Sync/Source) 8 Outputs, Transistor, 24 VDC, PNP	$125
TRPDIO0808N	8 Inputs 24 VDC (Sync/Source) 8 Outputs, Transistor, 24 VDC, NPN	$120
TRPHIO0808P	8 Inputs (4 HS) 24 VDC (Sync/Source) 8 Outputs (2 PWM), Transistor, 24 VDC, PNP	$145
TRPHIO0808N	8 Inputs (4 HS) 24 VDC (Sync/Source) 8 Outputs (2 PWM), Transistor, 24 VDC, NPN	$145
TRPDOX0016N	16 Outputs, Transistor, 24 VDC, 0.5 A/each, NPN	$160
TRPDOX0016P	16 Outputs, Transistor, 24 VDC, 0.5 A/each, PNP	$160
TRPROX0012	12 Output Relays 24 VDC - 240 VAC 2 A Each, 5 A/Common	$140

Clip-On I/O — Analog

Part Number	Description	Price
TRPADT0400	4 Inputs 4 to 20 mA, 0 to10 V, 12 Bits	$220
TRPRTX0402	4 Inputs, 0 to 10 V, 4 to 20 mA, RTD, TC 2 Outputs, 0 to 10 V, 4 to 20 mA, 16 Bits Each	$340
TRPAIO0202L	2 Inputs, 0 to 10 V, 4 to 20 mA 2 Outputs, 0 to 10 V, 4 to 20 mA, 12 Bits Each	$260

Notes:

- For availability of other displays, please contact TIC-PLC@toshiba.com

Industrial Automation

OIS PLUS Series Pricing

Cables

Part Number	Description	Price
EC-P-046A-00	Connects OIS40R/OIS PLUS/GWY to T1/T2E/T3/S2E/S2T RS485 Port, Pigtail on PLC End, 2 m	$30
EC-P-108A-00	Connects OIS PLUS to G9/P9/AS1 ASDs, RS485, 4W	$30
EC-P-108C-00	Connects OIS PLUS to VF-nC3/FS1 ASDs, RS485, 2W	$30
RC-P-009H-00	Connects OIS PLUS/GWY to V200 Series PLC, RS232, 2 m	$30
RC-P-108A-00	Connects V200 PLC to Toshiba G9/AS1 ASDs, RS485, 4W, 2 m	$30
IBM-0909-1-00	Programming Cable For Download from Computer to All OIS/OIS PLUS Use with OISetup32 & OIL-DS Setup Software	$30

Industrial Automation
Programmable Logic Controllers
V200 Series PLC Pricing

CPU Modules

Part Number	Description	Price
GPU230*3S	V200 CPU RS232/485, Ethernet & USB Ports Remote Programming, Monitoring, & Embedded Webpage Capability Requires 24 VDC PS Supports 16 I/O Expansion Modules	$500

Digital I/O Modules

Part Number	Description	Price
GDI216**S	16 Inputs 24 VDC, 8p/com Sink/Source	$120
GDR288**S	8 Inputs 24 VDC, 4p/com 8 Output Relays, 4p/com	$150
GDD288P*S	8 Inputs 24 VDC, 4p/com 8 Outputs PNP, 4p/com	$150
GDD288N*S	8 Inputs 24 VDC, 4p/com 8 Outputs NPN, 4p/com	$260
GRO216**S	16 Output Relays, 8p/com	$180
GDO216P*S	16 Outputs 24 VDC Transistor, 8p/com PNP	$180
GDO216**S	16 Outputs 24 VDC Transistor, 8p/com NPN	$180

Notes:
- For availability of other modules, please contact TIC-PLC@toshiba.com

Industrial Automation
V200 Series PLC Pricing

Analog I/O Modules

Part Number	Description	Price
GAD208**S	8 Analog Inputs 4 to 20 mA, 0 to 10 VDC (12 Bits)	$310
GAA242**S	4 Analog Selectable Inputs, 4 to 20 mA, 0 to 10 VDC 0-50/100 mV, RTD, TC 2 Analog Outputs, 4 to 20 mA, 0 to 10 VDC	$290
GDA204**S	4 Analog Outputs 4 to 20 mA, 0 to 10 VDC	$320

Cables

Part Number	Description	Price
RC-P-009I-00	Connects OIS PLUS/GWY to V200 Series PLC, RS485, 2 m	$30
RC-P-009H-00	Connects OIS PLUS/GWY to V200 Series PLC, RS232, 2 m	$30
RC-P-108C-00	Connects V200 PLC to Toshiba VF-nC3/FS1 ASDs, RS485, 2W, 2 m	$30
RC-P-108A-00	Connects V200 PLC to Toshiba G9/AS1 ASDs, RS485, 4W, 2 m	$30

Industrial Automation
Programmable Logic Controllers
V100 Series PLC Pricing

CPU Modules

Part Number	Description	Price
GPU105*3S	8 Inputs 24 VDC, 2 Outputs 24 Vdc Transistor, 6 Outputs Relay, Not Expandable, Requires 24 VDC PS.	$210
GPU110*3S	8 Inputs 24 VDC, 2 Outputs 24 Vdc Transistor, 6 Outputs Relay, 2 Analog Inputs 4-20mA/0-10V dc, 1 Analog Output 4-20mA, Not Expandable, Requires 24 VDC PS.	$240
GPU120*3S	16 Inputs 24 VDC, 2 Outputs 24 Vdc Transistor, 14 Outputs Relay, 2 Analog Inputs 4-20mA/0-10V dc, 1 Analog Output 4-20mA, Expandable, Requires 24 VDC PS.	$300

Industrial Automation

Type 1 Light Series
PLC Pricing

Type 1 Light-Series Controller Modules

Part Number	Description	Price
HPUM11**S	Sequence Control Module, Standard CPU User Program Capacity 32 kSteps Ports: USB, Ethernet, & SD Card Slot Uses V-Tool Programming Software	$2,500
HPUM12**S	Sequence Control Module, High Performance CPU User Program Capacity 64 kSteps Ports: USB, Ethernet, & SD Card Slot TC-Net I/O Loop, Optical Network Uses V-Tool Programming Software	$4,920
HPUM14**S	Sequence Control Module, Redundant CPU User Program Capacity 128 kSteps Ports: USB, Ethernet, & Tracking Cables TC-Net I/O Loop, Optical Network Uses V-Tool Programming Software	$8,600

Main/Expansion Racks

Part Number	Description	Price
GBU643D*S	Base Rack Four Station Bus Slots 1-3I/O Slots Not for PUM11	$470
GBU648E*S	Base Rack Four Slots (Up to 5 Station Bus Slots) Not for PUM11	$500
GBU664**S	Base Rack for PUM11 Three I/O Slots No Station Bus Expansion Rack Four I/O Slots	$230
GBU666**S	Base Rack for PUM11 Five I/O Slots No Station Bus Expansion Rack Six I/O Slots	$240
GBU668**S	Base Rack for PUM11 Seven I/O Slots No Station Bus Expansion Rack Eight I/O Slots	$250
GIF661**S	Interface Module for Connecting Expansion Racks	$160

Notes:

- For availability of other modules, please contact TIC-PLC@toshiba.com

Industrial Automation

Type 1 Light Series
PLC Pricing

Power Supplies

Part Number	Description	Price
GPS632**S	24 VDC Power Supply For Main/Expansion Racks	$410
GPS652**S	100 to 110 VDC Power Supply For Main/Expansion Racks	$710
GPS693**S	120/240 VAC Power Supply For Main/Expansion Racks 24 VDC Service PS	$290
GPS691**S	120/240 VAC Power Supply For Main Rack with UPS Interface Connections	$570

Direct I/O Modules — Discrete

Part Number	Description	Price
GIN663**S	AC Input Module 16 Points 200 to 240 VAC	$270
GIN653**S	AC Input Module 16 Points 100 to 120 VAC	$270
GDI632D*S	DC Input Module 8 Points 12 to 24 VDC Isolated Between Points	$310
GDI633**S	DC Input Module 16 Points 12 to 24 VDC	$170
GDI634**S	DC Input Module 32 Points 24 VDC	$400
GDI635**S	DC Input Module 64 Points 24 VDC	$560
GDI635H*S	DC Input Module High Speed 64 Points 24 VDC	$620
GDI653**S	DC Input Module 16 Points 100 to 110 VDC 0.1A/Point, Sync	$400
GCD633**S	DC Input Module Change Detect 16 Points 12 to 24 VDC	$690

Industrial Automation

Type 1 Light Series
PLC Pricing

Direct I/O Modules — Discrete

Part Number	Description	Price
GDO633*S	DC Output Module 16 Points, 5 to 24 VDC, 1A/Point Sync (Source Load)	$190
GDO633P*S	DC Output Module 16 Points, 5 to 24 VDC, 1A/Point, Source	$220
GDO634**S	DC Output Module 32 Points, 5 to 24 VDC, 0.1A/Point Sync	$460
GDO635**S	DC Output Module 64 Points, 5 to 24 VDC, 0.1A/Point Sync	$640
GAC663A*S	AC Output Module 12 Points, 100 to 240 VAC 1A/Point	$340
GRO662S*S	Relay Output Module Eight Points (Isolated) 240 VAC/24 VDC (max) 2A/Point	$230
GRO663**S	Relay Output Module 16 Points, 240 VAC/24 VDC (max), 2A/Point	$260
TRO272	Circuit Board for High Voltage DC Relay Output Module, 125 vDC	$1,260

Direct I/O Modules — Analog

Part Number	Description	Price
GAD634L*S	Analog Input Module Four Channels 0 to 10 V Input 8-Bit	$380
GAD668**S	Analog Input Module Eight Channels 0 to 5 V 0 to 20 mA ±10 V 16-Bit	$1,040
GAD674**S	Analog Input Module Four Channels ±10 V Input 12-Bit	$620
GAD624**S	Analog Input Module Four Channels 1 to 5 VDC/4 to 20 mA 12-Bit	$620
GAD638S*S	Analog Input Module Eight Channels (Isolated) ±10 V Input 12-Bit	$1,860
GAD624L*S	Analog Input Module Four Channels 1 to 5 VDC/4 to 20 mA 8-Bit	$380

Industrial Automation

Type 1 Light Series
PLC Pricing

Part Number	Description	Price
GAD628S*S	Analog Input Module Eight Channels (Isolated) 0 to 5 V/0 to 20 mA 12-Bit	$1,860
GRT614**S	RTD Input Module Four Channels Pt100 Input 12-Bit	$1,340
GTC618**S	Thermocouple Input Module Eight Channels E, J, K 16-Bit	$1,060
GDA672**S	Analog Output Module Two Channels ±10 V Output 12-Bit	$760
GDA624S*S	Analog Output Module Four Channels (Isolated) 0 to 20 mA 16-Bit Output Hold Option	$2,120
GDA622L*S	Analog Output Module Two Channels 1 to 5 VDC/4 to 20 mA 8-Bit	$420
GDA622**S	Analog Output Module Two Channels 1 to 5 V/4 to 20 mA 8-Bit	$760
GDA664**S	Analog Output Module Four Channels 0 to 5 V/0 to 20 mA ±10 V 16-Bit	$1,000

Industrial Automation

Type 1 Light Series
PLC Pricing

Cables

Part Number	Description	Price
GCS6R3*CS	Expansion Cable 0.3 m Long	$110
GCS6R5*CS	Expansion Cable 0.5 m Long	$120
GC6R7*CS	Expansion Cable 0.7 m Long	$130
GCS6*1*CS	Expansion Cable 1.2 m Long	$150
TKIO20	Cable for Hi-Density PLC I/O Modules 24 VDC One End I/O Connector & Other End Pigtail 1/32 pt Module 2/64 Module 2 m Long	$190

Intelligent I/O Modules

Part Number	Description	Price
GPI632**S	Pulse Input Module Two Channels Up to 50 kpps 5/12/24 V Input 24-Bit Counter	$920
GPI672**S	Pulse Input Module Two Channels Up to 50 kpps RS422 Input 24-Bit Counter	$1,000

Industrial Automation

Type 1 Light Series
PLC Pricing

Network Modules

Part Number	Description	Price
GDN611A*S	DeviceNet Scanner Module	$1,360
GPF611**S	Profibus DP Master Module	$6,360
GPF612**S	Profibus DP Slave Module	$5,500
GEN651A*S	Ethernet Module Single Bus 100 Base-TX	$2,000

Industrial Automation

Type 1 Light Series
PLC Pricing

Network Peripherals

Part Number	Description	Price
HGA922**S	TC-Net I/O Adapter Connects G2 Racks to TC-Net I/O Loop Allows Use of All G2 I/O Modules	$2,800

Programming

Part Number	Description	Price
HET81E4SS	Engineering Tool; MS Windows® XP or Later Programs All Type 1 light Series, & nV Controllers IEC61131-3 Compliant Single Station Stand Alone Version	$2,680
HET8UE4SS	Free Engineering Tool; MS Windows® XP or Later Programs only the PUM11 CPU IEC61131-3 Compliant Single Station Stand Alone Version	Free

Industrial Automation

Type 1 Light Series
PLC Pricing

Parts & Peripherals

Part Number	Description	Price
GPT9R2*AS	Spare Thermistor for TTC218/GTC618 Thermocouple Input Card	$20
GSP691**S	Module Blank with Cover for Custom I/O Card	$80
GSP600*AS	Module Blank	$50
GBT611*AS	Battery Spare for S2/L2 CPU Modules	$100

Notes:

- For availability and pricing of other equipment, please contact TIC-PLC@toshiba.com
- For further information, documentation etc. please visit https://www.toshiba.com/tic/plcs

1-800-231-1412
www.toshiba.com/tic

CONTACT US

	CUSTOMER SERVICE
Low Voltage Motors	Tel: (855) 803-7091 Fax: (713) 896-5242 TIC-MDCustomerService@toshiba.com
Medium Voltage Motors	
Adjustable Speed Drives	
Custom Adjustable Speed Drives	Tel: (855) 803-7090 TIC-CASD_PO@toshiba.com
Power Apparatus & Controls	Tel: (800) 231-1412 x2993 TIC-Controls@toshiba.com
PLCs	Tel: (800) 231-1412 x26724 TIC-PLC@toshiba.com
Instrumentation	Tel: (800) 231-1412 x26723 TIC-Instrument@toshiba.com

	APPLICATIONS & PRODUCT SUPPORT
Low Voltage Motors	Tel: (855) 803-7091 TIC-LVM@toshiba.com
Medium Voltage Motors	Tel: (855) 803-7091 TIC-MVM@toshiba.com
Adjustable Speed Drives	Tel: (855) 803-7089 Fax: (713) 896-5242 TIC-ASD@toshiba.com
Custom Adjustable Speed Drives	Tel: (855) 803-7090 TIC-CASD@toshiba.com TIC-CASD_quotes@toshiba.com
Power Apparatus & Controls	Tel: (800) 231-1412 x2993 TIC-Controls@toshiba.com
PLCs	Tel: (800) 231-1412 x26724 TIC-PLC@toshiba.com
Instrumentation	Tel: (800) 231-1412 x26723 TIC-Instrument@toshiba.com

	FIELD SERVICE
Low Voltage Motors	Tel: (855) 803-7092 Fax: (713) 896-5224 Rapid Response: TIC-ASD-RA@toshiba.com Repair Authorization: TIC-ASD-RA@toshiba.com On Site Service Request: TIC-ASD-SVC@toshiba.com Service Training: TIC-ASD-Training@toshiba.com Motor Warranty TIC-motorwarranty@toshiba.com Motor Spare Parts 1-855-803-7092 Option 1
Medium Voltage Motors	
Adjustable Speed Drives	
Custom Adjustable Speed Drives	

Motor Notes

1	Non-NAFTA Qualified
2	Drive End Roller Bearing
3	1.0 Service Factor
4	Uni-directional CCW Rotation When Facing Non Drive End
5	Uni-directional CW Rotation When Facing Non-Drive End
6	NEMA Design A
7	Totally Enclosed Non-Ventilated (TENV)
8	Ball-Bearing Long Shaft as Standard
9	Nameplated Dual Frequency 50/60 hz.
10	Insulated Sleeve Bearings
11	Insulated Bearing Housing
12	Copper Bar Rotor
13	May Not Meet 841 Sound Level Requirements
14	Class F Rise by Resistance at 1.0 Service Factor
15	Suitable for Vertical Mounting
16	Non-NEMA "BA" Dimensions
17	Available Until Stock Depleted
18	Drilled for Multi-Mount. (Appendix B)

Agency Approvals

IS09001:2008

Emblem: ISO 9001:2008
Agency: International Standards Organization
Requirements: ISO 9001

NVLAP

Emblem: NVLAP LAB CODE 200088-0

Agency: National Voluntary Laboratory Accreditation Program (NVLAP), administered by the National Institute of Standards and Technology (NIST)
Requirements: Efficiency testing per ISO/IEC 17025

UL Listed

Emblem:

Agency: Underwriters Laboratories (UL)
Requirements:
a) Construction in accordance with UL 1004 and 674; covers safe application of XP electric motors for use in classified locations
b) Compliance with UL requirements is documented in Toshiba's UL File - E53559
c) Maintain traceability of product using UL controlled serial numbers on listing labels

UL Component Recognition

Emblem:

Agency: Underwriters Laboratories (UL)
Requirements: UL 1004 Safety Standard for Electric Motors
Toshiba File: E133052

CSA Safety & Energy Efficiency

Emblem: Energy Verified

Agency: Canadian Standards Association (CSA)
Requirements: CSA Std. C22.2 No. 0, 77, 100, and 145 &390

NEMA

Emblem: NEMA Premium

Agency: National Electrical Manufacturers Association (NEMA)

Requirements: Meets or exceeds efficiency values of NEMA MG-1 (most recent version), Tables 12-12 (LV 60 Hz), 12-13 (MV 60 Hz), and 12-14 (LV 50 Hz) NEMA Premium marking is primarily intended for 60 Hz applications

IEC European Conformity

Emblem:

Agency: European Commission
Requirements: Complies with the relevant EU directives (applicability will vary by product line).
A combination of the following directives may be applied (some are optional).
a) EMC Directive
b) Low Voltage Directive
c) Machinery Directive
d) Ecodesign Directive
e) ROHS Directive
Demonstration of compliance is typically performed with reference to applicable IEC/EN standards.

U.S. Department of Energy

Emblem:

Agency: U.S. Department of Energy (DOE)
Requirements: Motors whose efficiency levels meet or exceed the values shown in the Code of Federal Regulations - particularly those shown in 10 CFR Part 431 (location of this legislation may change and is subject to the evolving decisions made by the U.S. Department of Energy)
Toshiba File: CC027B, CC020A, CC129B

CSA Safety

Emblem:

Agency: Canadian Standards Association (CSA)
Requirements: CSA Std. C22.2 No. 0, 77, 100, and 145

CSA Energy Efficiency

Emblem: Energy Verified

Agency: Canadian Standards Association (CSA)
Requirements: CSA Std. C390 Toshiba File: MC 153942 - EEV 79018

TOSHIBA

TOSHIBA INTERNATIONAL CORPORATION

Toshiba International Corporation

13131 W. Little York Road, Houston, TX 77041
Tel: 713-466-0277 Fax: 713-466-8773
U.S., Canada, & Mexico: 800-231-1412

www.toshiba.com/tic

© 2020 Toshiba International Corporation • Rev.01ESSENCE0120