SHARK™ INSTALLATION INSTRUCTIONS

Thank you for buying RAB lighting fixtures. Our goal is to design the best quality products to get the job done right. We'd like to hear your comments. Call the Marketing Department at 888-RAB-1000 or email: marketing@rabweb.com

SHARK - 2FT

SHARK - 4FT

IMPORTANT

READ CAREFULLY BEFORE INSTALLING FIXTURE. RETAIN THESE INSTRUCTIONS FOR FUTURE REFERENCE.
Fixtures must be wired in accordance with the National Electrical Code and all applicable local codes. Proper grounding is required for safety. THIS PRODUCT MUST BE INSTALLED IN ACCORDANCE WITH THE APPLICABLE INSTALLATION CODE BY A PERSON FAMILIAR WITH THE CONSTRUCTION AND OPERATION OF THE PRODUCT AND THE HAZARDS INVOLVED.
WARNING: Make certain power is OFF before installing or maintaining fixture. No user serviceable parts inside.

CAUTION:

- **For proper weatherproof function all gaskets must be seated properly and all screws and plugs inserted and tightened firmly. Apply weatherproof silicone sealant around the edge of the Housing. This is especially important with an uneven ceiling surface. Silicone all plugs and unused conduit entries.**
- **USE SHARK WITH CONDUIT ONLY.**

SURFACE MOUNTING

The fixture is suitable for outdoor applications in wet locations either ceiling or wall mounted.

1. Use appropriate mounting hardware (not supplied) to secure the **Snap On Brackets (2)** to **Mounting Surface**. Recommended **Snap On Bracket** distance center to center is 15-3/16" (for 2 feet) and 37-19/32" (for 4 feet). **WARNING:** Mount **Snap On Brackets (2)** farther away from each other and symmetrical about the center. To secure **Housing**, **Snap On Brackets (2)** must be aligned with each other.
2. Unlatch the **Lens** from **Housing**.
3. Snap out the **LED & Heat Sink Assembly. Tether Cables (2)** are provided, if required.
4. Feed supply wires through one of the **Conduit Plugs (5)** to make electrical splices. Cord-grips (2) are provided and can be used based on application.
5. Snap in **LED and Heat Sink Assembly** and secure **Lens** to **Housing** by **Latch**. Be careful not to pinch wires. Check that gasket is fully sealed.
6. Use appropriate UL approved wire connectors as required by code to complete wiring with supply wires. Be careful not to pinch wires.
   WARNING: To prevent wiring damage or abrasion, do not expose wiring to edges of sharp objects.
7. Snap **Housing** on **Snap On Brackets (2)** as shown in **Fig. 2**. Ensure that **Housing** is secure to **Snap On Brackets (2)** and inserted into the **Grooves** on **Lens** as shown in **Fig. 1**.
8. Use silicone or teflon tape on all **Conduit Plugs** and on the threads of all conduit entry points. If outdoor surface is irregular, use caulk to seal any gaps around **Housing**.

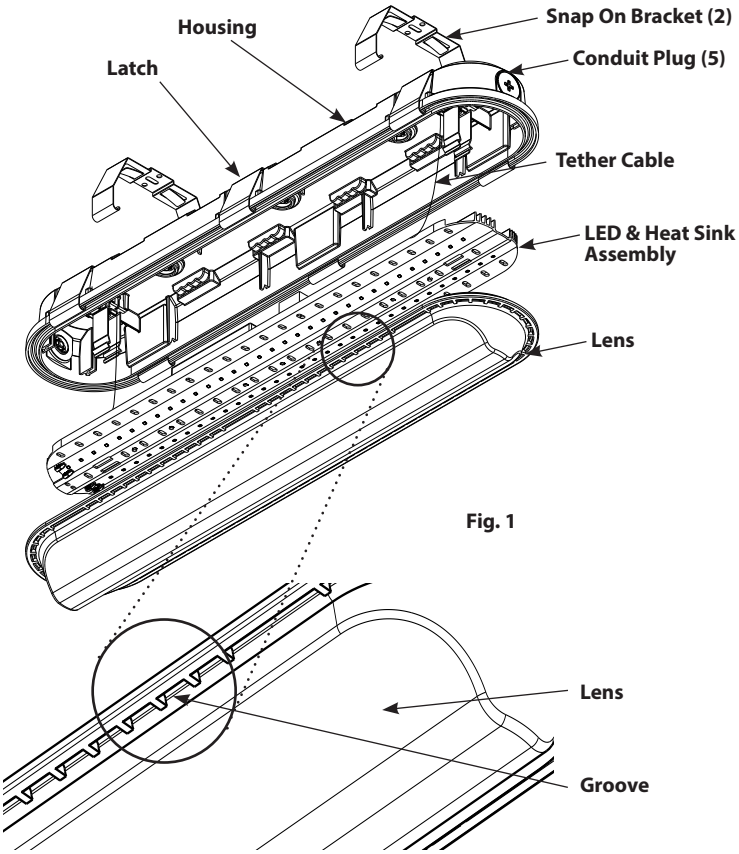

Fig. 1

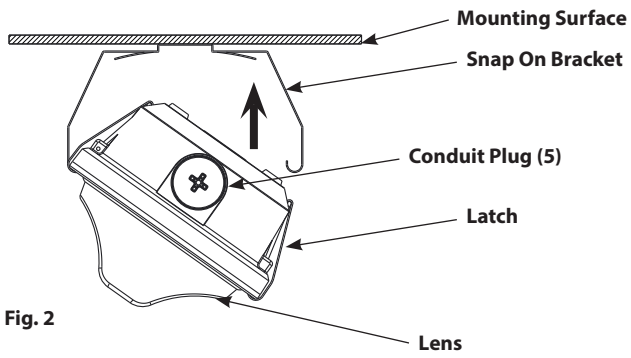

Fig. 2

SHARK™ INSTALLATION INSTRUCTIONS

Thank you for buying RAB lighting fixtures. Our goal is to design the best quality products to get the job done right. We'd like to hear your comments. Call the Marketing Department at 888-RAB-1000 or email: marketing@rabweb.com

ACCESSORIES - CMSHARK

(ordered separately) - Fig. 3 and 4

1. Secure **Bracket A (2)** to **Housing** with screws provided. **WARNING:** Brackets must be mounted at exact location as shown in **Fig. 3**.
2. Use appropriate mounting hardware (not supplied) to secure the **Bracket B (2)** to mounting surface. **Bracket B** distance center to center is 12-19/32" (for 2 feet) and 32" (for 4 feet).
   WARNING: To secure **Housing**, **Bracket B (2)** must be aligned with each other.
3. Hang one side of **Bracket A** onto **Bracket B** and tighten **Screw (2)** on other side as shown in **Fig. 4**

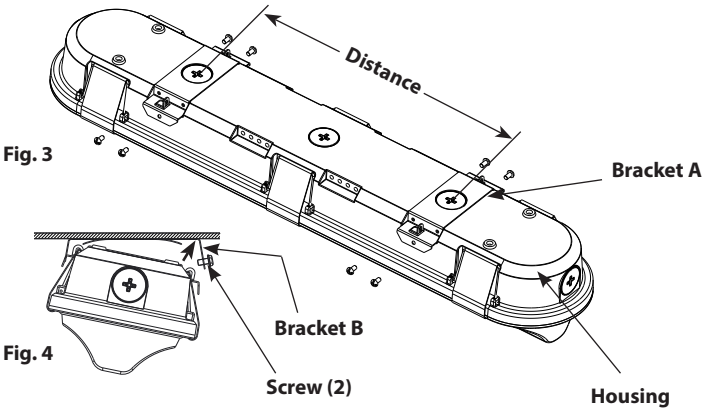

Fig. 3

Fig. 4

ACCESSORIES - VHOOKSHARK

(ordered separately) - Fig. 3 and 5

1. Secure **Bracket A (2)** to **Housing** with screws provided. **WARNING:** Brackets must be mounted at exact location as shown in **Fig. 3**.
2. Loop **V-Hooks (2)** on **Bracket A (2)** as shown in **Fig. 5**.
3. To suspend **Housing**, connect each **V-Hook** to two (2) equal lengths of chain (not supplied) and/ or appropriate hardware (by others) suitable for mounting surface. Use chain suitable to support four (4) times the weight of the fixture.

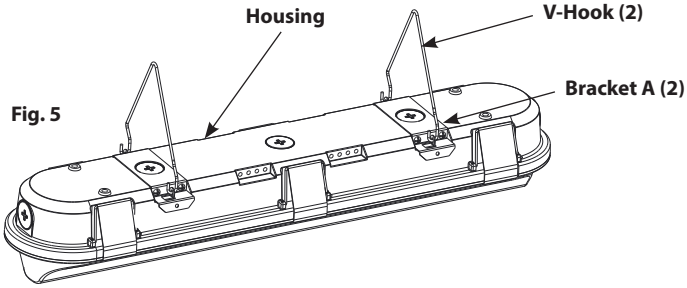

Fig. 5

ACCESSORIES - JBSHARK

(ordered separately) - Fig.4, 6 and 7

1. Secure **Bracket A (2)** to **Housing** with screws provided. **WARNING:** Brackets must be mounted at exact location as shown in **Fig. 6**.
2. Use appropriate mounting hardware (not supplied) to secure the **Junction Box Plate** to mounting surface or junction box. Check that gasket is fully sealed. Use Cord Grip provided with fixture to feed supply wires in fixture.
3. Hang one side of each **Bracket A** onto **Junction Box Plate** and tighten **Screws (2)** on other side as shown in **Fig.4**

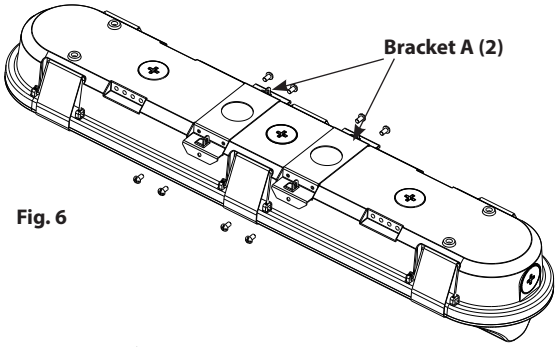

Fig. 6

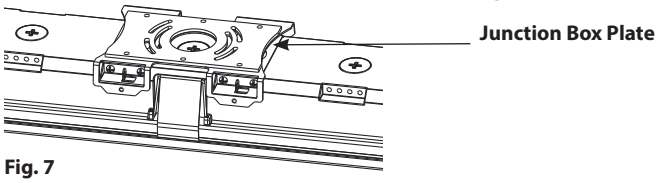

Fig. 7

SHARK™ INSTALLATION INSTRUCTIONS

Thank you for buying RAB lighting fixtures. Our goal is to design the best quality products to get the job done right. We'd like to hear your comments. Call the Marketing Department at 888-RAB-1000 or email: marketing@rabweb.com

ACCESSORIES - ANGSHARK

(ordered separately) - Fig. 8 and 9

1. Use appropriate mounting hardware (not supplied) to secure the **Corner Bracket (2)** to mounting surface as shown in **Fig. 8. Bracket Tabs** must face towards each other. Recommended **Corner Bracket** distance center to center is 13-5/16" (for 2 feet) and 35-23/32" (for 4 feet).
2. Secure **Snap On Bracket (2)** (supplied standard with Housing) to **Corner Bracket (2)** with **Screws** provided as shown in **Fig. 8.**
3. Snap **Housing** on **Snap On Brackets (2)** as shown in **Fig. 2, Page 1**. Ensure that **Housing** is secure to **Snap On Brackets (2)** onto the **Grooves** on **Lens** as shown in **Fig. 1, Page 1**.

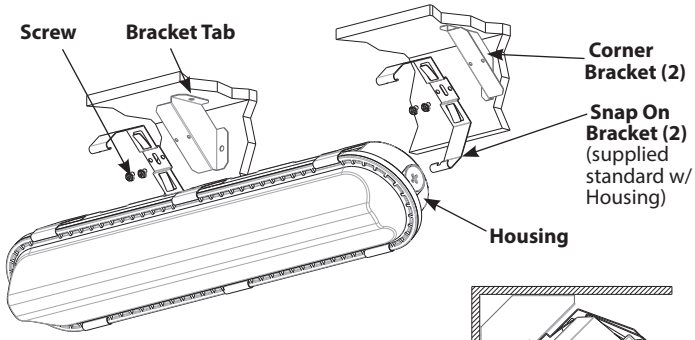

Fig. 8

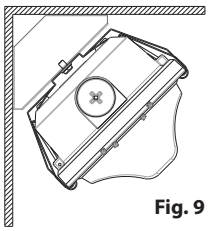

Fig. 9

CLEANING & MAINTENANCE

CAUTION: Be sure fixture temperature is cool enough to touch. Do not clean or maintain while fixture is energized.

1. Clean polycarbonate lens with non-abrasive cleaning solution.
2. Do not open the fixture to clean the LEDs. Do not touch the LEDs.

TROUBLESHOOTING

1. Check that the line voltage at the fixture is correct. Refer to wiring directions.
2. Be sure the fixture is grounded properly.

ON-OFF WIRING

Universal voltage driver permits operation at 120V thru 277V, 50 or 60 Hz. Units ordered with (/480V) suffix are 480V, 50Hz or 60Hz. For Non-Dimming, follow the wiring directions in **Fig. 10**.

1. Connect the black fixture lead to the LINE supply lead.
2. Connect the white fixture lead to the COMMON supply lead.
3. Connect the GROUND wire from fixture to supply ground.

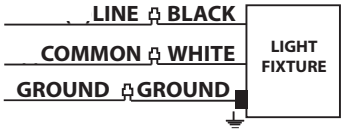

Fig. 10

0-10V DIMMABLE WIRING

Universal voltage driver permits operation at 120V thru 277V, 50 or 60 Hz. Units ordered with (/480V) suffix are 480V, 50Hz or 60Hz. For 0-10V Dimming, follow the wiring directions in **Fig. 11**.

1. Connect the black fixture lead to the (+) LINE supply lead.
2. Connect the white fixture lead to the (-) COMMON supply lead.
3. Connect the GROUND wire from fixture to supply ground. Do NOT connect the GROUND of the dimming fixture to the output.
4. Connect the purple fixture lead to the (V+) DIM lead.
5. Connect the gray fixture lead to the (V-) DIM lead.
6. Cap the yellow fixture lead, if present. Do NOT connect.

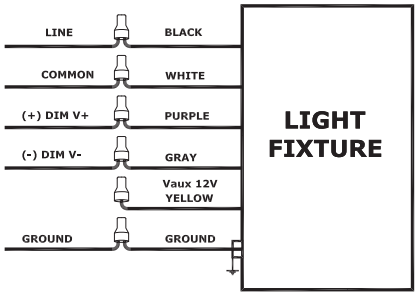

Fig. 11

PATENT - **US**: pat. D725, 307

Note: These instructions do not cover all details or variations in equipment nor do they provide for every possible situation during installation operation or maintenance.

©2015 RAB LIGHTING Inc.
Northvale, New Jersey 07647 USA
SHARK IN 1015

Easy Installation & Product Help

Tech Help Line
Call our experts 888 RAB-1000

rabweb.com
Visit our website for product info

email
Answered promptly sales@rabweb.com