THIS COPY IS PROVIDED ON A RESTRICTED BASIS AND IS NOT TO BE USED IN ANY WAY DETRIMENTAL TO THE INTERESTS OF PANDUIT CORP.

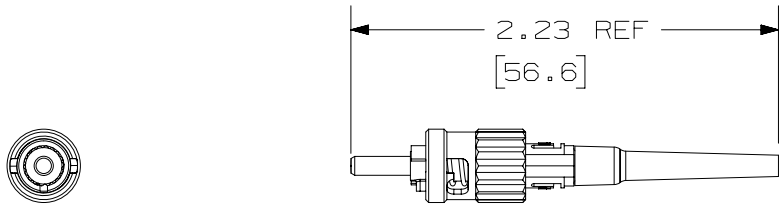

NOTES:
1. SEE CATALOG FOR ADDITIONAL PART NUMBER SUFFIXES TO INDICATE COLOR AND/OR PACKAGE QUANTITY
2. ACCEPTS 900um BUFFERED GLASS OPTICAL FIBER.
3. FULLY COMPLIES WITH THE FIBER OPTIC CONNECTOR PERFORMANCE REQUIREMENTS AS SPECIFIED BY TIA/EIA-568-C.3.
4. MATERIAL:
   BODY/HARDWARE: PLASTIC
   BOOT: THERMOPLASTIC RUBBER
   FERRULE: ZIRCONIA CERAMIC OR POLYMER
5. DIMENSIONS IN [ ] ARE METRIC [mm].
6. 1.6/2.0mm AND 3.0mm BOOT ASSEMBLIES ARE AVAILABLE SEPARATELY.
7. ALL MATERIALS AND COMPONENTS USED MEET THE MATERIAL RESTRICTIONS OF RoHS (EUROPEAN DIRECTIVE 2011/65/EC ON THE RESTRICTION OF HAZARDOUS SUBSTANCES) AS PROPOSED BY THE RoHS TECHNICAL ADAPTATION COMMITEE.

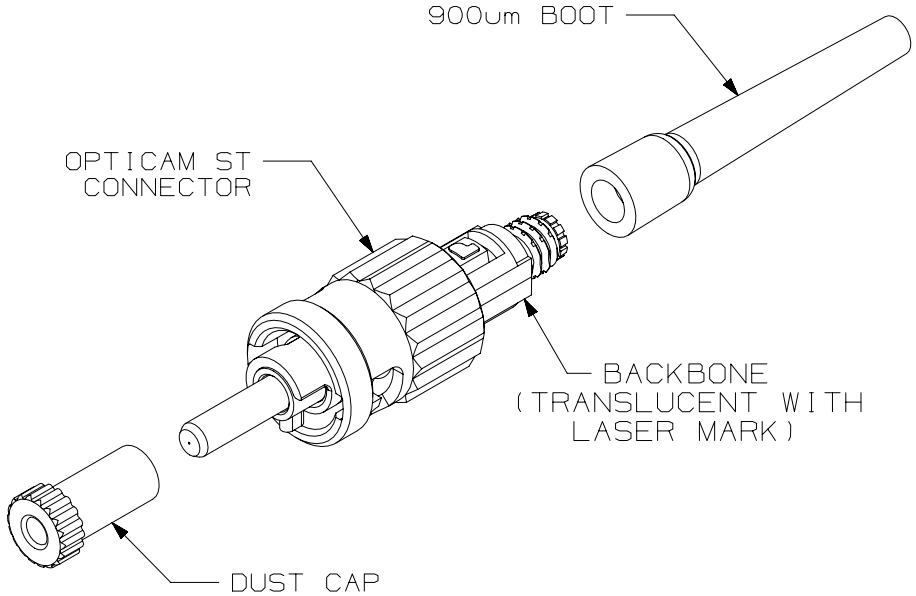

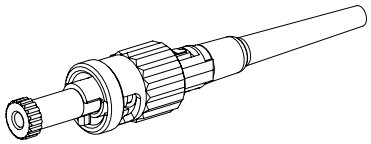

PANDUIT PART NUMBER	FIBER TYPE
FST2SCBU	9/125um OS1/OS2 SINGLEMODE
FST2MC6EI	62.5/125um OM1 MULTIMODE
FST2MC5BL	50/125um OM2 MULTIMODE
FST2MCXAQ	50/125um OM3/OM4 MULTIMODE

REV	DATE	BY	CHK	APR	DESCRIPTION	ECN
00A	03-31-17	SAT	PJI	SKH	RELEASED TO PRODUCTION	M01894CS-DC

TITLE
OPTICAM ST2 CONNECTOR
CUSTOMER DRAWING

ITEM REVISION NAME: M01894CS/00

DATASET FILE NAME: M01894CS_DC/00A

UNLESS OTHERWISE SPECIFIED, DIMENSIONAL TOLERANCES ARE: IN [mm]
.X ± .XXX ± .010 [0.3]
.XX ± .03 [0.8] ANGLES ±
THIRD ANGLE PROJECTION

PART NO.: SEE TABLE

DRAWING NUMBER: M01894CS-DC

DRAWN BY	DATE	CHK	SCALE	SHT 1 OF 1	SIZE
SAT	03-31-17	PJI	NONE		A