THIS COPY IS PROVIDED ON A RESTRICTED BASIS AND IS NOT TO BE USED IN ANY WAY DETRIMENTAL TO THE INTERESTS OF PANDUIT CORP.

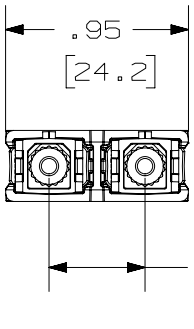

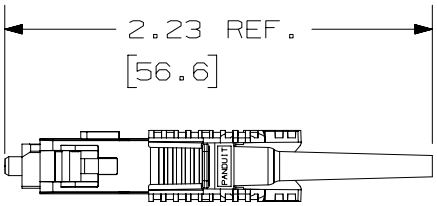

NOTES:
1. SEE CATALOG FOR ADDITIONAL PART NUMBER SUFFIXES TO INDICATE COLOR AND/OR PACKAGE QUANTITY.
2. ACCEPTS 900um BUFFERED GLASS OPTICAL FIBER.
3. FULLY COMPLIES WITH THE FIBER OPTIC CONNECTOR PERFORMANCE REQUIREMENTS AS SPECIFIED BY TIA/EIA-568-C.3.
4. MATERIAL:
   BODY/HARDWARE: PLASTIC
   BOOT: THERMOPLASTIC RUBBER
   FERRULE: ZIRCONIA CERAMIC
5. DIMENSIONS IN [ ] ARE METRIC.
6. 1.6/2.0mm AND 3.0mm BOOT ASSEMBLIES ARE AVAILABLE.
7. ALL MATERIALS AND COMPONENTS USED MEET THE MATERIAL RESTRICTIONS OF RoHS (EUROPEAN DIRECTIVE 2011/65/EC ON THE RESTRICTION OF HAZARDOUS SUBSTANCES) AS PROPOSED BY THE RoHS TECHNICAL ADAPTATION COMMITEE.

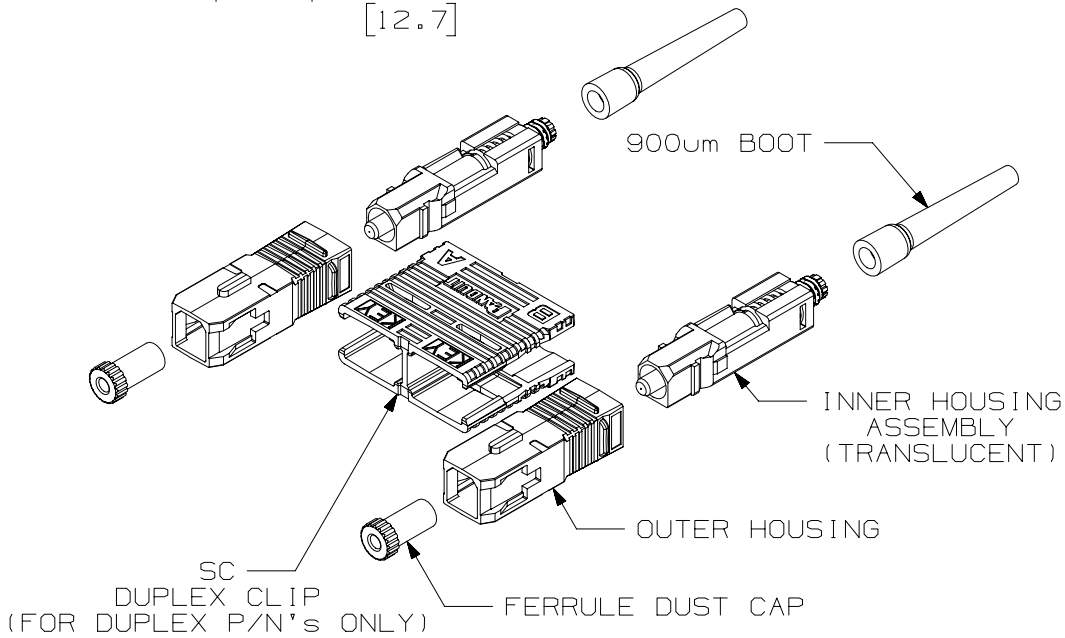

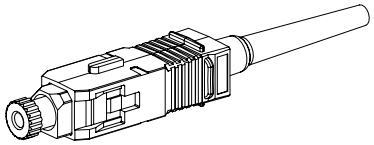

SIMPLEX CONNECTOR

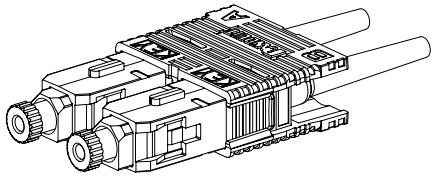

DUPLEX CONNECTOR

PANDUIT PART NUMBER		FIBER TYPE
SIMPLEX	DUPLEX	
FSC2SCBU	FSC2DSCBU	9/125um OS1/OS2 SINGLEMODE
FSC2MC6EI	FSC2DMC6EI	62.5/125um OM1 MULTIMODE
FSC2MC5BL	FSC2DMC5BL	50/125um OM2 MULTIMODE
FSC2MCXAQ	FSC2DMCXAQ	50/125um OM3/OM4 MULTIMODE

REV	DATE	BY	CHK	APR	DESCRIPTION	ECN
00A	3-31-17	SAT	PJI	SKH	RELEASED TO PRODUCTION	M01799FD-DC

TITLE

OPTICAM SC2 CONNECTOR

CUSTOMER DRAWING

ITEM REVISION NAME: M01799FD/00

DATASET FILE NAME: M01799FD_DC/00A

PANDUIT

UNLESS OTHERWISE SPECIFIED, DIMENSIONAL TOLERANCES ARE: IN [mm]

.X ± .XXX ± .010 [0.3]

.XX ± .03 [0.8] ANGLES ±

THIRD ANGLE PROJECTION

PART NO.: SEE TABLE

DRAWING NUMBER: M01799FD-DC

DRAWN BY	DATE	CHK	SCALE	SHT 1 OF 1	SIZE
SAT	03-31-17	PJI	1 : 1		A