M-10606 2

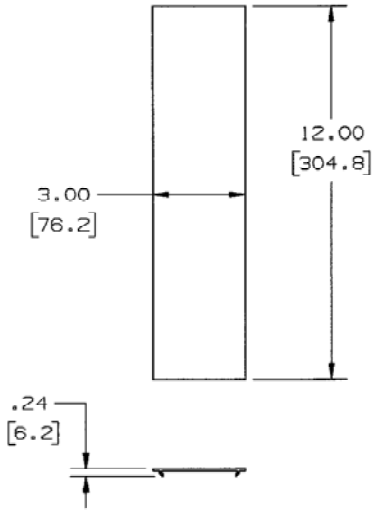


TYP. COVER PLATE DIMENSIONS

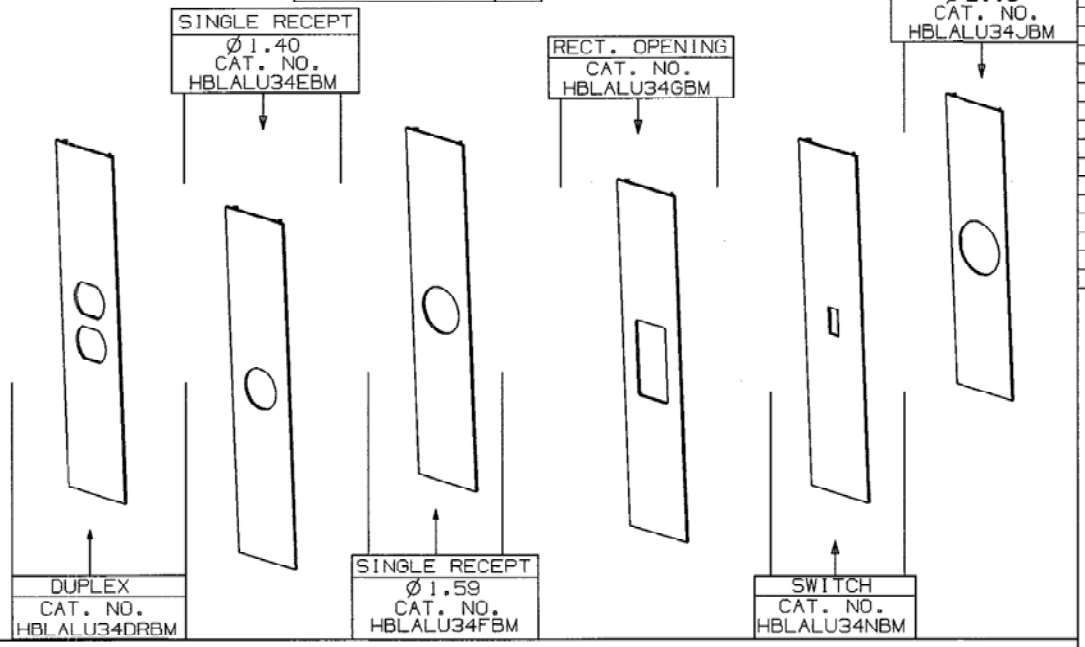


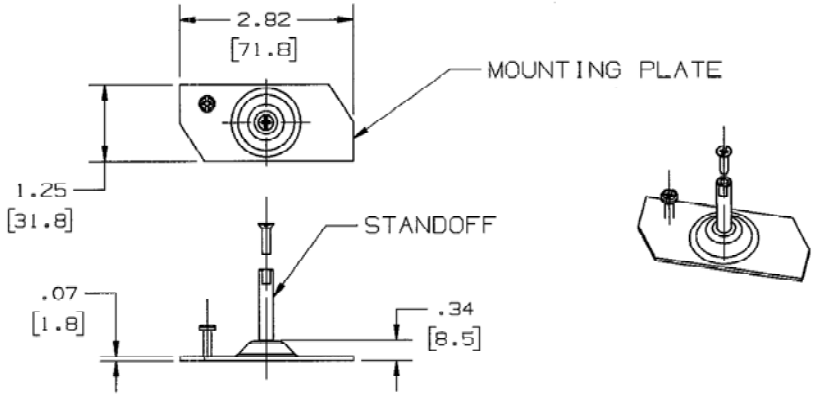


ALL COVER PLATES ARE SUPPLIED WITH (2) STANDOFFS, (2) MOUNTING PLATES, (2) TIGHTENING SCREWS - #6-32 X 1/2 PAN HEAD, & (2) DEVICE MOUNTING SCREWS - #6-32 X 1/2 FLAT HEAD.

NOTE: ALL DIMENSIONS IN INCHES AND [ MM ]

CODE 74545

LIST OF PARTS

| DESCRIPTION | MATERIAL | FINISH |
|---|---|---|
| COVER PLATE | ALUMINUM | SATIN ANODIZED |
| MOUNTING PLATE | STEEL | ZINC |
| SCREWS | STEEL | ZINC |

DIMENSION SHEET FOR CAT. NO. SEE TABLE

REPAIRABLE ☐ NON-REPAIRABLE ☒

| SYM | REVISIONS | APP | DATE |
|---|---|---|---|
| 2 | ADDED CAT NO HBLALU34JBM, HBLALU34FBM WAS HBLALFBM. IN LIST OF PARTS DEL BEZEL ADDED MTG PLATE & SCREWS DCN15272 SRE | SRE | 10/3/08 |
| 1 | RELEASED PER DCN13903 | SRE | 4/30/07 |

THE DESIGN AND DIMENSIONS OF THE PRODUCT SHOWN ON THIS DRAWING ARE SUBJECT TO CHANGE WITHOUT NOTICE

TITLE
COVER PLATES, BASE MOUNTED
HBLALU3800/HBLALU4800
ALUMINUM SERIES

TOLERANCES UNLESS OTHERWISE SPECIFIED
FRACTIONS ± 1/64
DECIMALS ± .005
ANGLES ± 2°

WIRING DEVICE-KELLEMS
HUBBELL INCORPORATED
BRIDGEPORT, CT

| | |
|---|---|
| DR. BY SRE | APP. BY SRE |
| TR. BY | SCALE 1 : 1 |
| CHK'D BY SRE | DATE 4/30/07 |

B M-10606 2