M-10330 3

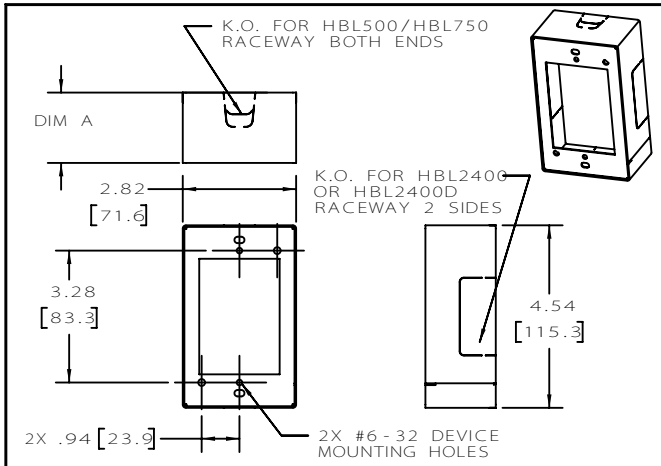

BOX COVER			
CAT. NO.	COLOR	DIM. A	VOLUME
HBL2448IV	IVORY	1.75 [44.5]	20.0in^3 [327.6cm^3]
HBL2444IV & HBL2444DIV	IVORY	2.75 [69.8]	33.0in^3 [540.5cm^3] WITHOUT TUNNEL

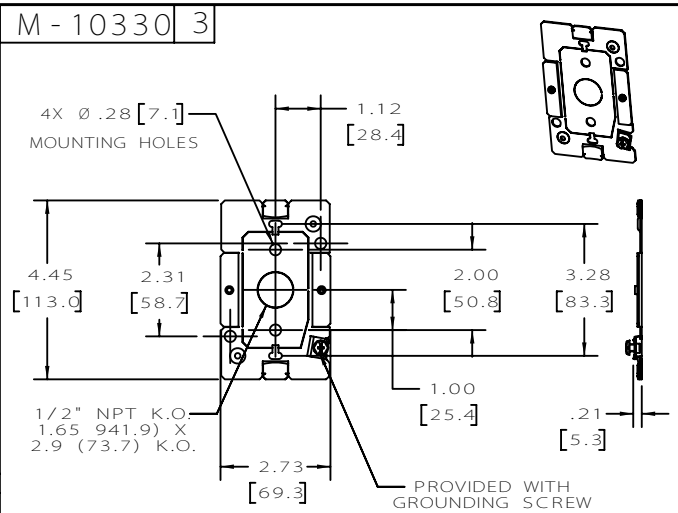

BOX BASE, UNDIVIDED
CAT. NO. HBL2444IV & HBL2448IV

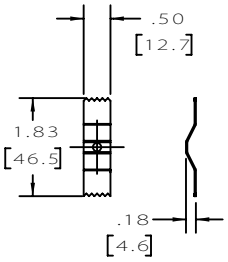

CLAMP
FOR USE WITH
UNDIVIDED BOXES,
(2) SUPPLIED

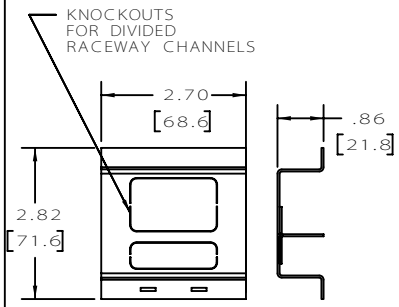

TUNNEL
FOR USE WITH
DIVIDED BOX

WHEN IN PLACE
REDUCES BOX VOLUME BY
4.4 IN^3 72.1 cm^3

NOTE: ALL DIMENSIONS IN INCHES
AND [MM]

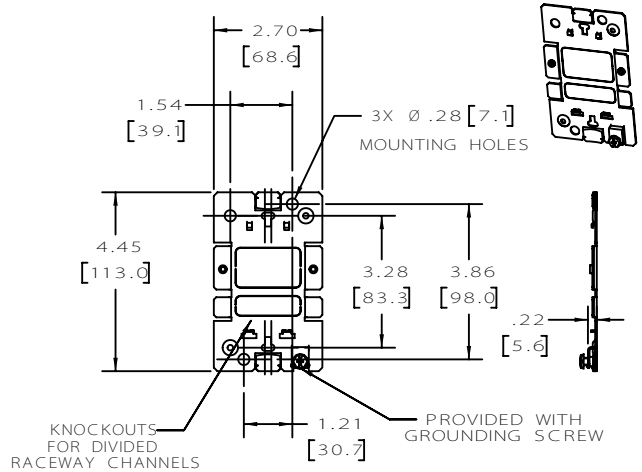

BOX BASE, DIVIDED
CAT. NO. HBL2444DIV

LIST OF PARTS

DESCRIPTION	MATERIAL	FINISH
BOX COVER	STEEL	PAINTED
BOX BASE	STEEL	GALVANIZED
BOX CLAMP	STEEL	GALVANIZED
BOX TUNNEL	STEEL	GALVANIZED

DIMENSION SHEET FOR CAT. NO.
SEE TABLE

REPAIRABLE ☐ NON-REPAIRABLE ☒

SYM	REVISIONS	APP	DATE
3	UPDATED IMAGE OF BOX BASE UNDIVIDED DCN14964	SRE SM	6-19-08
2	UPDATED IMAGES OF TUNNEL & DIVIDED BOX BASE DCN14307	SRE	10-11-07
1	RELEASED PER DCN13354	SRE	2/27/07

THE DESIGN AND DIMENSIONS OF THE PRODUCT SHOWN ON THIS DRAWING ARE SUBJECT TO CHANGE WITHOUT NOTICE

TITLE
BOXES, SINGLE GANG
HBL2400/HBL2400D SERIES

TOLERANCES UNLESS OTHERWISE SPECIFIED
FRACTIONS ±1/64
DECIMALS ±.005
ANGLES ±2°

WIRING DEVICE-KELLEMS
HUBBELL INCORPORATED
BRIDGEPORT, CT

DR. BY SRE | APP. BY SRE
TR. BY | SCALE 1:1
CHK'D BY SRE | DATE 2/28/07

B
M-10330
3

CODE 74545