M-8061 3

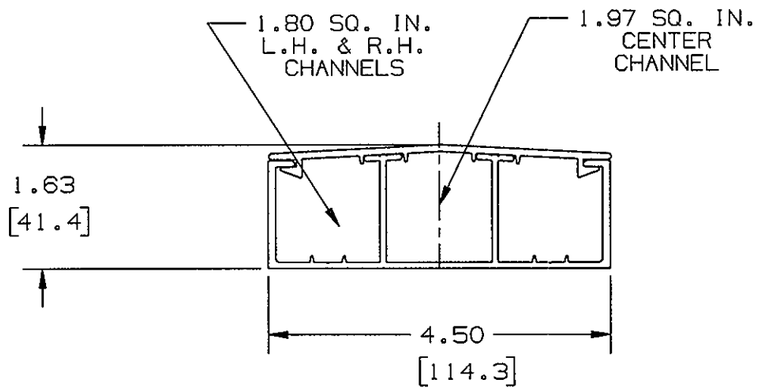

RACEWAY - BASE & COVER 5 FT = PB3BC5
RACEWAY - BASE & COVER 10 FT = PB3BC10

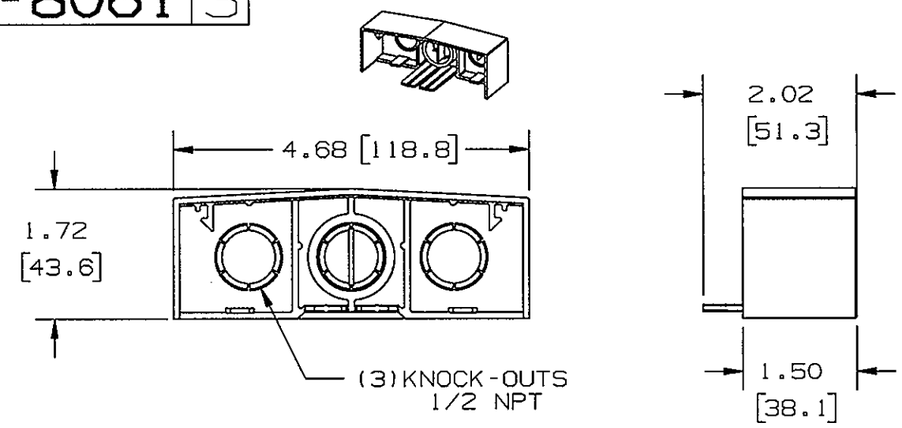

END CAP PB3ECA

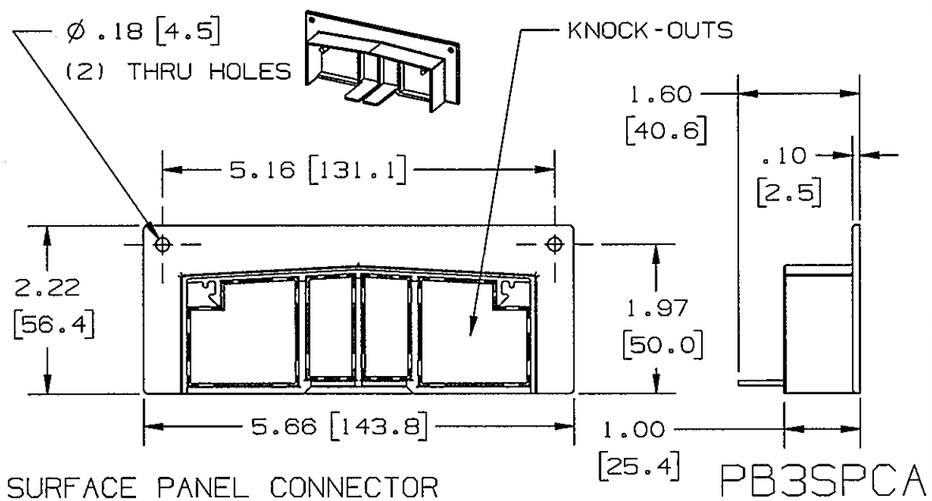

SURFACE PANEL CONNECTOR PB3SPCA

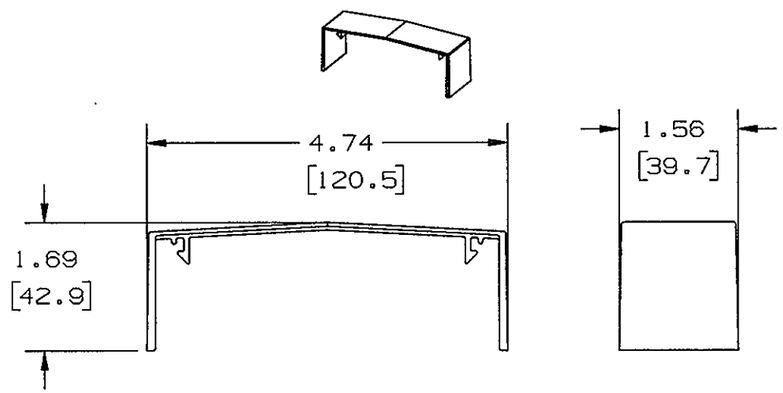

SPLICE COVER PB3SC

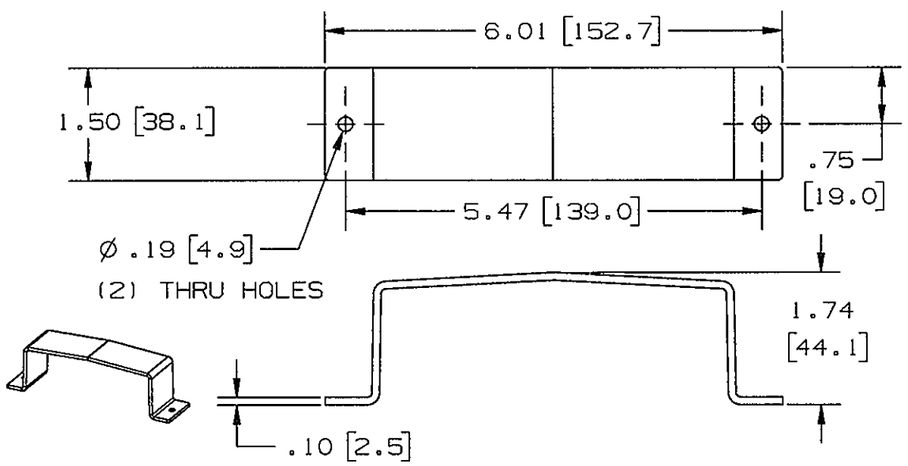

SECURITY STRAP/SPLICE COVER PB3SS

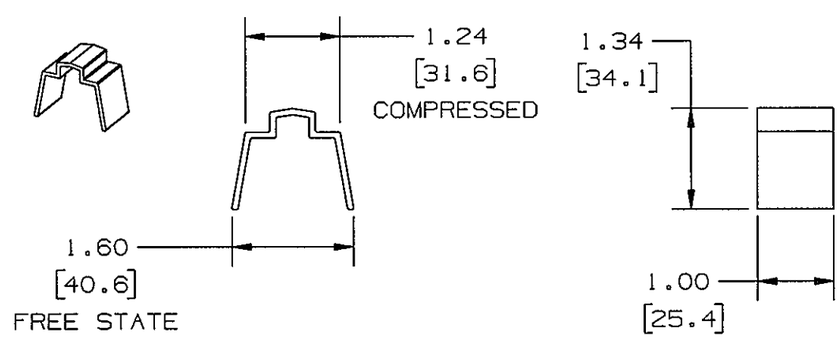

WIRE RETAINING CLIP PB3WC

NOTES:
1. ALL DIMENSIONS IN INCHES AND [mm].
2. NOT FOR USE WITH RW90 CONDUCTOR.

CODE 74545

LIST OF PARTS

DESCRIPTION	MATERIAL	FINISH
RACEWAY COVER	PVC	OFFICE WHITE
RACEWAY BASE	PVC	OFFICE WHITE
END CAP	PVC	OFFICE WHITE
SURFACE PANEL CONNECTOR	PVC	OFFICE WHITE
SPLICE COVER	PVC	OFFICE WHITE
SECURITY STRAP/SPLICE COVER	PVC	OFFICE WHITE
WIRE RETAINING CLIP	PVC	OFFICE WHITE

SYM	REVISIONS	APP	DATE
3	ADDED NOTE 2 PER DCN 22260; RM	DJP	7/14/16
2	REVISED PER DCN11790	SRE	6/9/04
1	RELEASED PER DCN 9305	SRE	5/1/02

THE DESIGN AND DIMENSIONS OF THE PRODUCT SHOWN ON THIS DRAWING ARE SUBJECT TO CHANGE WITHOUT NOTICE

TITLE
RACEWAY & FITTINGS
BASETRAK

TOLERANCES UNLESS OTHERWISE SPECIFIED
.XX = ±.01
.XXX = ±.005
ANGLES = ±2°

WIRING DEVICE-KELLEMS
HUBBELL INCORPORATED
SHELTON, CT

DR. BY SRE	APP. BY SRE
TR. BY	SCALE ---
CHK. BY SRE	DATE 9/27/01

DIMENSION SHEET FOR CAT. NO.
SEE DRAWING

REPAIRABLE ☐ NON-REPAIRABLE ☒

B

M-8061

3