M-10409 | 1

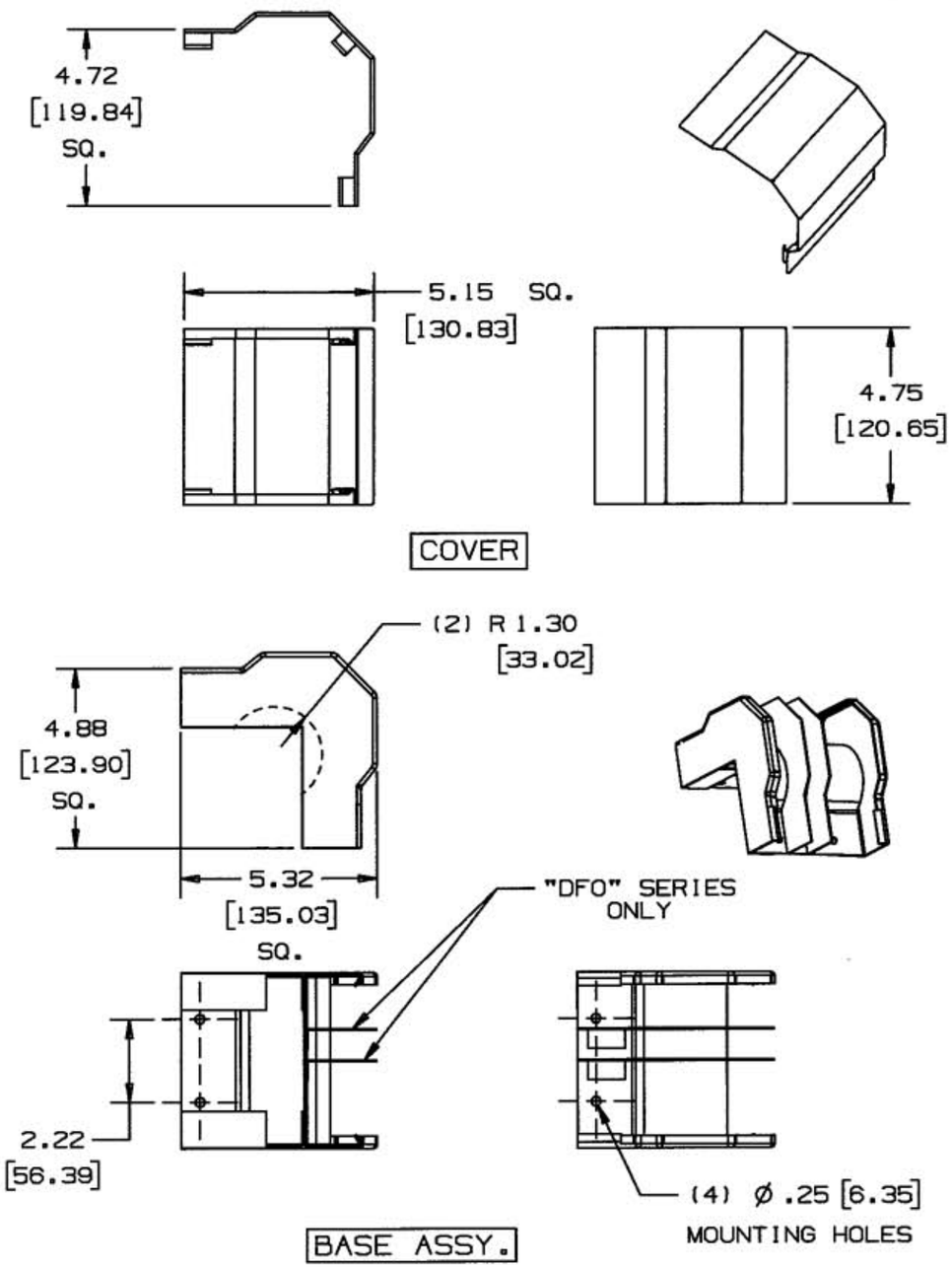

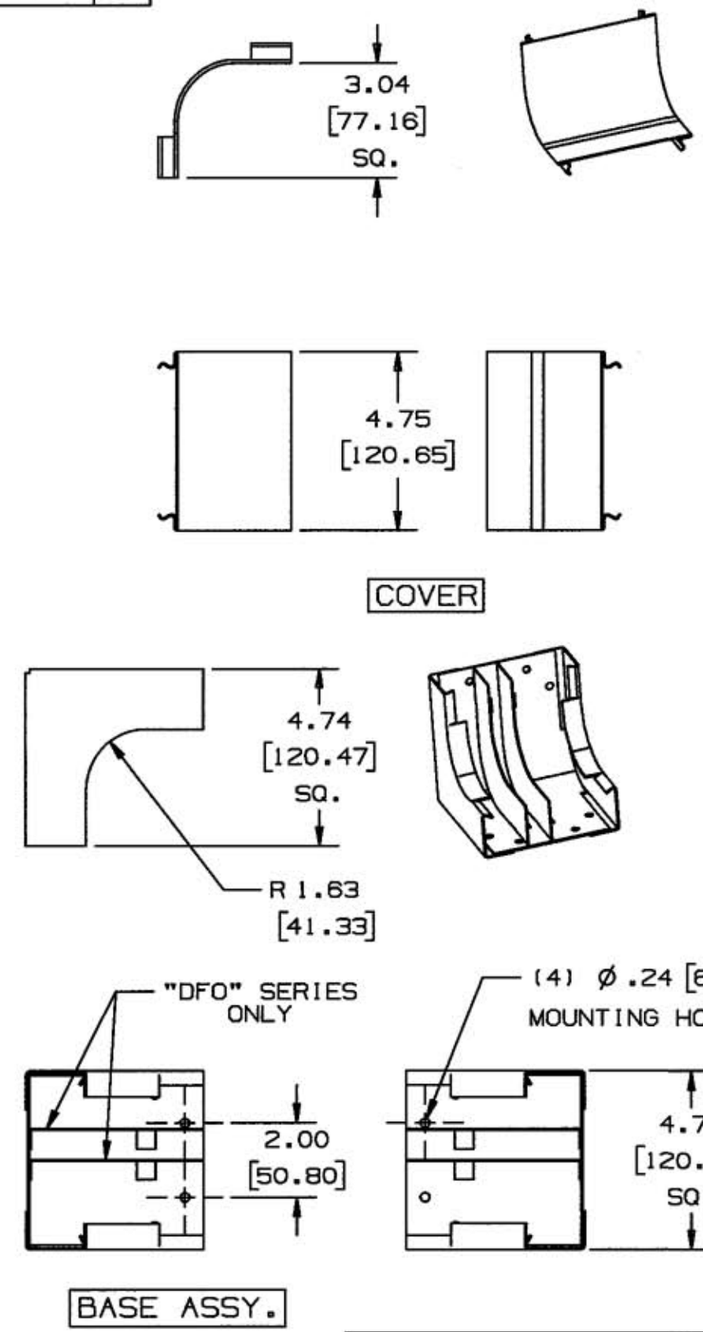

EXTERNAL ELBOW	
CAT. NO.	COLOR
HBL4718DFOIV	IVORY
HBL4718DFOGY	GRAY
HBL4718IV	IVORY
HBL4718GY	GRAY

INTERNAL ELBOW	
CAT. NO.	COLOR
HBL4717DFOIV	IVORY
HBL4717DFOGY	GRAY
HBL4717IV	IVORY
HBL4717GY	GRAY

NOTE: ALL DIMENSIONS IN INCHES AND [MM]

CODE 74545

LIST OF PARTS

DESCRIPTION	MATERIAL	FINISH
BASE ASSY.	STEEL	PAINTED
COVER	STEEL	PAINTED

DIMENSION SHEET FOR CAT. NO. SEE TABLE

REPAIRABLE ☐ NON-REPAIRABLE ☒

B

SYM	REVISIONS	APP	DATE
1	RELEASED PER DCN 13554		11/16/06

THE DESIGN AND DIMENSIONS OF THE PRODUCT SHOWN ON THIS DRAWING ARE SUBJECT TO CHANGE WITHOUT NOTICE

TITLE INTERNAL/EXTERNAL ELBOWS HBL4750 SERIES

TOLERANCES UNLESS OTHERWISE SPECIFIED
FRACTIONS ± 1/64
DECIMALS ± .005
ANGLES ± 2°

WIRING DEVICE-KELLEMS
HUBBELL INCORPORATED
BRIDGEPORT, CT

DR. BY SRE | APP. BY
TR. BY | SCALE 1 : 1
CHK'D BY | DATE 11/16/06

M-10409 1