M-8493 | 2 SHT 1 OF 2

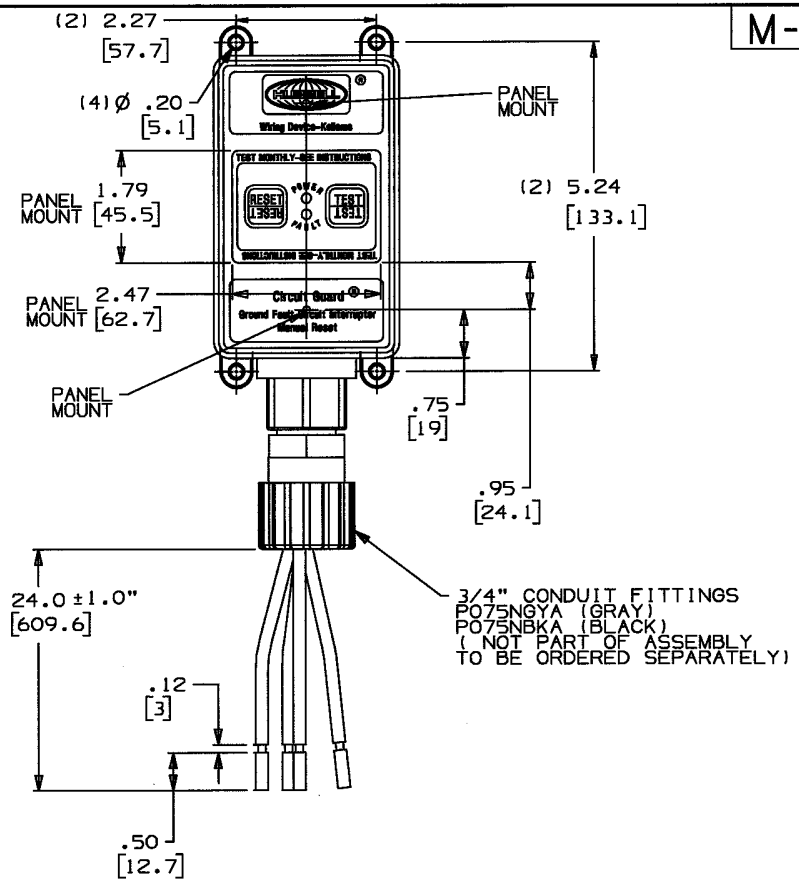

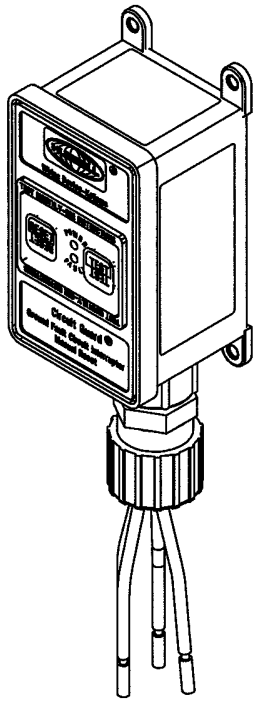

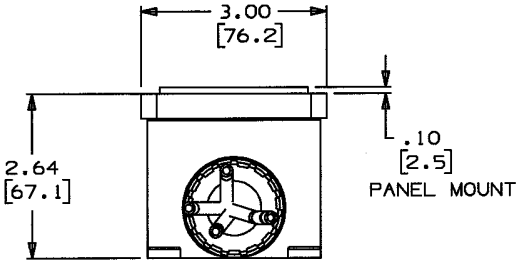

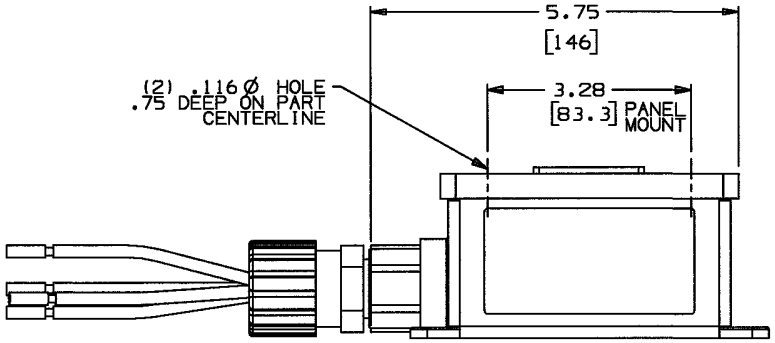

CODE 74545

LIST OF PARTS

DESCRIPTION	MATERIAL	FINISH

SYM	REVISIONS	APP	DATE
2	MOUNTING BOSSES RELOCATED FROM SIDES OF BOX TO TOP AND BOTTOM. MOUNTING HOLE LOCATIONS 2.27 WAS 3.37 AND 5.24 WAS 2.87. PER DCN 13887 SPN	SML	1/15/07
1	RELEASE FOR PRODUCTION DCN8670 GPK / SM 6/25/01	SM	7/17/01

THE DESIGN AND DIMENSIONS OF THE PRODUCT SHOWN ON THIS DRAWING ARE SUBJECT TO CHANGE WITHOUT NOTICE

TITLE PERMANENT GFCI PANEL & SURFACE MOUNT MANUAL / AUTOMATIC

TOLERANCES UNLESS OTHERWISE SPECIFIED
FRACTIONS ±1/64
DECIMALS ±.005
ANGLES ±2°

WIRING DEVICE-KELLEMS
HUBBELL INCORPORATED
BRIDGEPORT, CT

DR. BY GPK | APP. BY
TR. BY | SCALE 2:1
CHK'D BY SM | DATE 5/22/01

DIMENSION SHEET FOR CAT. NO.

REPAIRABLE ☐ NON-REPAIRABLE ☐

B

M-8493 SHT 1 OF 2

2

M-8493 | 2 | SHT. 2

ITEM	HUBBELL CATALOG	VOLTAGE 120V	VOLTAGE 240V	VOLTAGE 120/240V	AMP	POWER -UP	WATTS	OUTPUT	WIRE NUMBER (SEE WIRE CHART)
1	GFHW13005	YES			30A	MANUAL	3600	NONE	1,2,3,4
2	GFHW13015	YES			30A	MANUAL	3600	ENUNCIATOR	1,2,3,4,15,16
3	GFHW13025	YES			30A	MANUAL	3600	VAC	1,2,3,4,17,18
4	GFHW13035	YES			30A	MANUAL	3600	24 VDC	1,2,3,4,19,20
5	GFHW13045	YES			30A	MANUAL	3600	12 VDC	1,2,3,4,19,20
6	GFHW23005		YES		30A	MANUAL	7200	NONE	5,6,7,8
7	GFHW23015		YES		30A	MANUAL	7200	ENUNCIATOR	5,6,7,8,15,16
8	GFHW23025		YES		30A	MANUAL	7200	VAC	5,6,7,8,17,18
9	GFHW23035		YES		30A	MANUAL	7200	24 VDC	5,6,7,8,19,20
10	GFHW23045		YES		30A	MANUAL	7200	12 VDC	5,6,7,8,19,20
11	GFHW33005			YES	30A	MANUAL	7200	NONE	9,10,11,12,13,14
12	GFHW33015			YES	30A	MANUAL	7200	ENUNCIATOR	9,10,11,12,13,14,15,16
13	GFHW33025			YES	30A	MANUAL	7200	VAC	9,10,11,12,13,14,17,18
14	GFHW33035			YES	30A	MANUAL	7200	24 VDC	9,10,11,12,13,14,19,20
15	GFHW33045			YES	30A	MANUAL	7200	12 VDC	9,10,11,12,13,14,19,20
16	GFHW13105	YES			30A	AUTO	3600	NONE	1,2,3,4
17	GFHW13115	YES			30A	AUTO	3600	ENUNCIATOR	1,2,3,4,15,16
18	GFHW13125	YES			30A	AUTO	3600	VAC	1,2,3,4,17,18
19	GFHW13135	YES			30A	AUTO	3600	24 VDC	1,2,3,4,19,20
20	GFHW13145	YES			30A	AUTO	3600	12 VDC	1,2,3,4,19,20
21	GFHW23105		YES		30A	AUTO	7200	NONE	5,6,7,8
22	GFHW23115		YES		30A	AUTO	7200	ENUNCIATOR	5,6,7,8,15,16
23	GFHW23125		YES		30A	AUTO	7200	VAC	5,6,7,8,17,18
24	GFHW23135		YES		30A	AUTO	7200	24 VDC	5,6,7,8,19,20
25	GFHW23145		YES		30A	AUTO	7200	12 VDC	5,6,7,8,19,20
26	GFHW33105			YES	30A	AUTO	7200	NONE	9,10,11,12,13,14
27	GFHW33115			YES	30A	AUTO	7200	ENUNCIATOR	9,10,11,12,13,14,15,16
28	GFHW33125			YES	30A	AUTO	7200	VAC	9,10,11,12,13,14,17,18
29	GFHW33135			YES	30A	AUTO	7200	24 VDC	9,10,11,12,13,14,19,20
30	GFHW33145			YES	30A	AUTO	7200	12 VDC	9,10,11,12,13,14,19,20

STANDARD WIRE APPLICATION

WIRE CHART			
WIRE APPLICATION	WIRE #	COLOR	DESCRIPTION
120V	1	BLACK	HOT LINE
	2	WHITE	NEUTRAL LINE
	3	BLACK WITH WHITE STRIPES	HOT LOAD
	4	WHITE WITH BLACK STRIPES	NEUTRAL LOAD
240V	5	BLACK	LINE 1 LINE
	6	RED	LINE 2 LINE
	7	BLACK WITH STRIPES	LINE 1 LOAD
	8	RED WITH STRIPES	LINE 2 LOAD
120/240V	9	WHITE	NEUTRAL LINE
	10	BLACK	LINE 1 LINE
	11	RED	LINE 2 LINE
	12	WHITE WITH BLACK STRIPES	NEUTRAL LOAD
	13	BLACK WITH WHITE STRIPES	LINE 1 LOAD
	14	RED WITH BLACK STRIPES	LINE 2 LOAD

OPTIONAL

WIRE CHART			
WIRE APPLICATION	WIRE #	COLOR	DESCRIPTION
ENUNCIATOR	15	BLACK	
	16	BLACK	
VAC	17	ORANGE	
	18	GRAY	
VDC	19	RED	(+)
	20	BLACK	(-)

NOTES;
1. ENUNCIATOR,12VDC & 24VDC OUTPUT WIRES ARE #22AWG ,ALL OTHER WIRES ARE #10AWG .

LIST OF PARTS

DESCRIPTION	MATERIAL	FINISH

DIMENSION SHEET FOR CAT. NO.

REPAIRABLE ☐ NON-REPAIRABLE ☐

SYM	REVISIONS	APP	DATE
2	NO CHANGES THIS SHEET SEE SHEET 1 FOR CHANGES	SML	1/15/07
1	RELEASE FOR PRODUCTION DCN8670 GPK / SM 6/25/01	SM	7/17/01

THE DESIGN AND DIMENSIONS OF THE PRODUCT SHOWN ON THIS DRAWING ARE SUBJECT TO CHANGE WITHOUT NOTICE

TITLE PERMANENT GFCI PANEL & SURFACE MOUNT MANUAL / AUTOMATIC

TOLERANCES UNLESS OTHERWISE SPECIFIED
FRACTIONS ±1/64
DECIMALS ±.005
ANGLES ±2°

WIRING DEVICE-KELLEMS
HUBBELL INCORPORATED
BRIDGEPORT, CT

DR. BY GPK	APP. BY
TR. BY	SCALE NONE
CHK'D BY SM	DATE 5/31/01

B M-8493 SHT. 2 2