M-3320 5

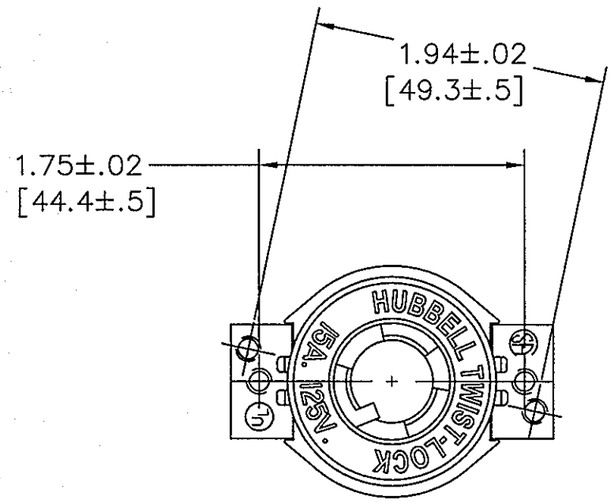

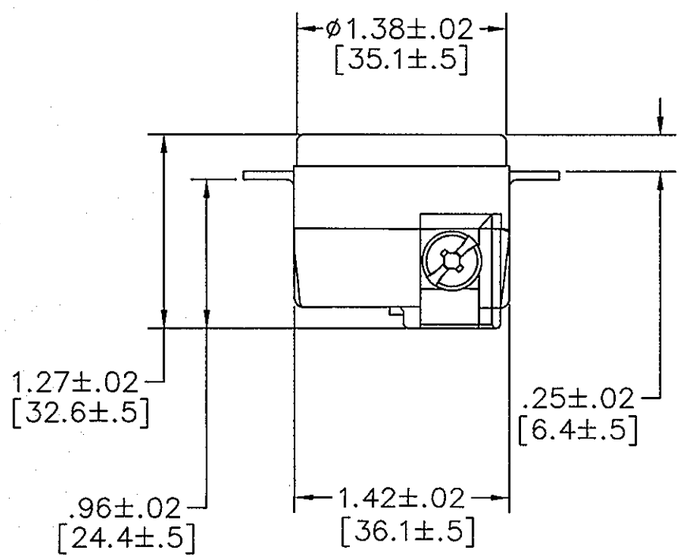

CAT. NO.	NEMA CONFIGURATION	RATING	UL	CSA
HBL4713	L5-15R	15A 125V	YES	YES
HBL4563	L6-15R 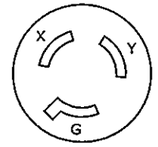	15A 250V	YES	YES
HBL4763	L7-15R 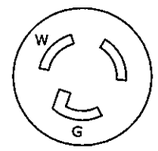	15A 277VAC	YES	YES

1. WIRE CAPICITY: #16 TO #12 AWG, SOLID OR STRANDED COPPER WIRE ONLY.
2. SUPPLIED WITH (2) #8-32 X .44 MOUNTING SCREWS [11.2]
3. DIMENSIONS ARE INCHES. [mm]

LIST OF PARTS

DESCRIPTION	MATERIAL	FINISH
BRIDGE	STEEL	ZINC PLATE
FACE	NYLON	BLACK
SCREW, DRIVE	STEEL	ZINC PLATE
BACK COVER	POLYESTER	BLACK
CONTACTS	BRASS	
SCREWS, TERMINAL	BRASS	

SUPERSEDES DWG. DATED 2/5/05

SYM	REVISIONS	APP	DATE
5	REDRAWN ON CAD. ADDED TABLE WITH NEMA CONFIG. REVISED LIST OF PARTS. TITLE 2 POLE 3 WIRE GROUNDING WAS 15A 125V NEMA L5-15R. REPLACED TOLERANCE BLOCK. PER DCN 20730 SPN	DJP	9/4/14

THE DESIGN AND DIMENSIONS OF THE PRODUCT SHOWN ON THIS DRAWING ARE SUBJECT TO CHANGE WITHOUT NOTICE

TITLE
PANEL MOUNT RECEPTACLE
2 POLE 3 WIRE GROUNDING

TOLERANCES UNLESS OTHERWISE SPECIFIED
.XX ± .01
.XXX ± .005
ANGLES ± 2°

WIRING DEVICE-KELLEMS
HUBBELL INCORPORATED
SHELTON, CT

DR. BY	CM	APP. BY	
TR. BY	SPN	SCALE	1:1
CHK'D BY	JCH	DATE	9/4/14

DIMENSION SHEET FOR CAT. NO. SEE TABLE

REPAIRABLE ☐ NON-REPAIRABLE ☒

B

M-3320 5

CODE 74545