M-13492 | 1

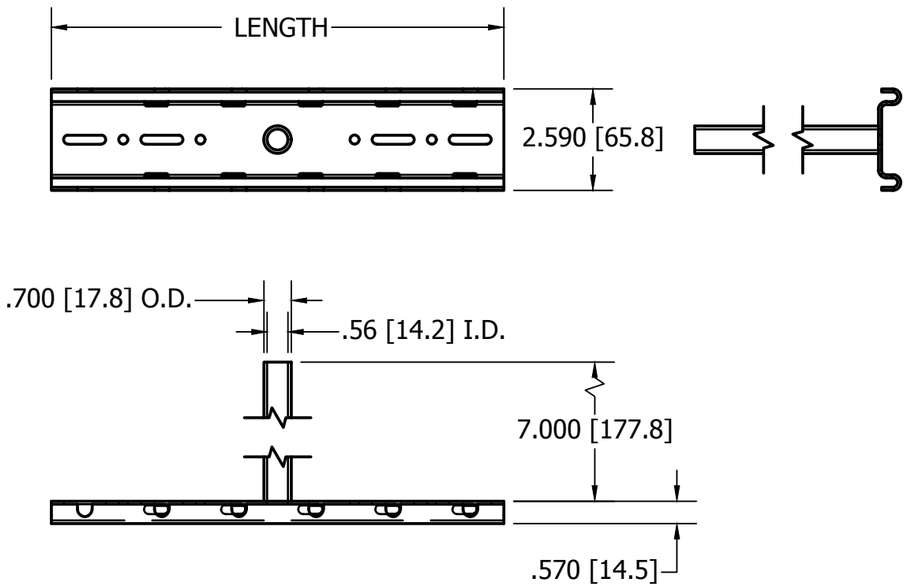

NO SPLICE SUPPORT
(CENTER SUPPORT)

TRAY WIDTH	LENGTH	PRE-GALVANIZED	BLACK POWDER COAT
6 [152.4]	5.65 [143.5]	HBTNSCTRS6	HBTNSCTRS6BK
8 [203.2]	7.62 [193.5]	HBTNSCTRS8	HBTNSCTRS8BK
12 [304.8]	11.56 [293.6]	HBTNSCTRS12	HBTNSCTRS12BK
16 [406.4]	15.5 [393.7]	HBTNSCTRS16	HBTNSCTRS16BK
18 [457.2]	17.5 [444.5]	HBTNSCTRS18	HBTNSCTRS18BK
20 [508.0]	19.43 [493.5]	HBTNSCTRS20	HBTNSCTRS20BK
24 [609.6]	27.0 [685.8]	HBTNSCTRS24	HBTNSCTRS24BK

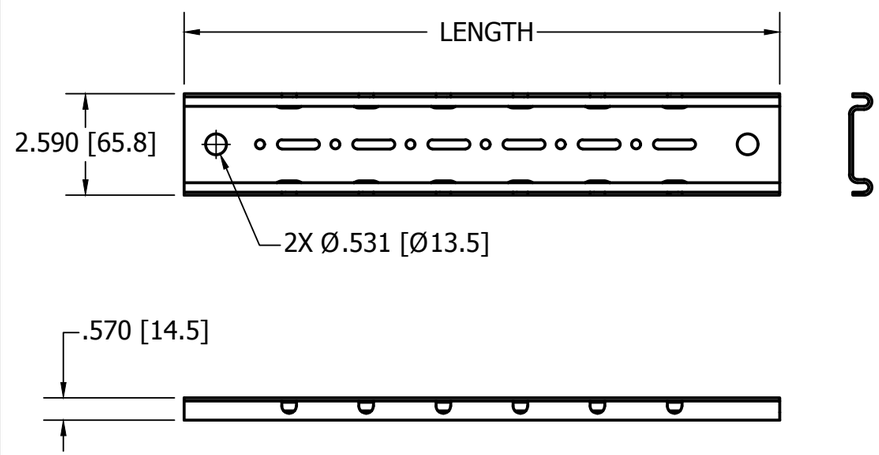

NO SPLICE SUPPORT
(CEILING SUPPORT)

TRAY WIDTH	LENGTH	PRE-GALVANIZED	BLACK POWDER COAT
12 [304.8]	15.21 [386.3]	HBTNSCLGS12	HBTNSCLGS12BK
16 [406.4]	19.15 [486.4]	HBTNSCLGS16	HBTNSCLGS16BK
18 [457.2]	21.12 [536.4]	HBTNSCLGS18	HBTNSCLGS18BK
20 [508.0]	23.1 [586.7]	HBTNSCLGS20	HBTNSCLGS20BK
24 [609.6]	27.0 [685.8]	HBTNSCLGS24	HBTNSCLGS24BK

LIST OF PARTS

DESCRIPTION	MATERIAL	FINISH
SUPPORT	STEEL	SEE TABLE
HARDWARE	STEEL	ZINC PLATED

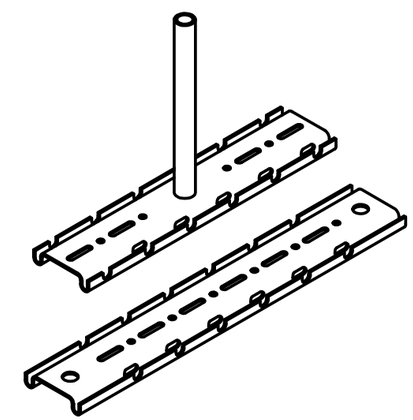

CATALOG NO. HBTNSCTRS12
& HBTNSCLGS12
(NOT SHOWN TO SCALE)

REV	DESCRIPTION	APP	DATE
1	INITIAL DOCUMENT RELEASE PER DCN 22750	DDL	11/15/16

THE DESIGN AND DIMENSIONS OF THE PRODUCT SHOWN ON THIS DRAWING ARE SUBJECT TO CHANGE WITHOUT NOTICE. DIMENSIONS ARE IN INCHES [mm].

NOTES:

1. INSTALL EVERY 5 FEET
2. MOUNTING HARDWARE INCLUDED
3. ACCEPTS 1/2" ROD

TITLE

NO SPLICE SUPPORT

WIRING DEVICE-KELLEMS
HUBBELL INCORPORATED
SHELTON, CT

TOLERANCES UNLESS OTHERWISE SPECIFIED
.XX = ± .01
.XXX= ± .005
ANGLE TOL. ±2°

DR. BY	GM	SCALE	NONE
CHK. BY	MN	DATE	09/08/16

DIMENSION SHEET FOR CAT. NO.
SEE TABLE

B

M-13492

1

CAGE CODE 74545