M-9310 2

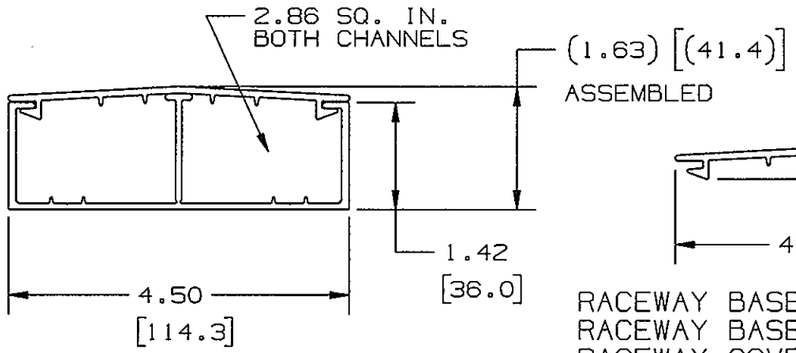

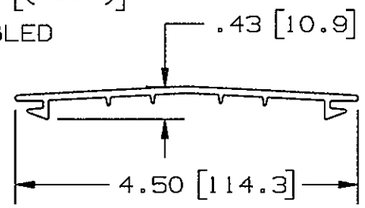

RACEWAY BASE 10 FT PB2B10
RACEWAY BASE 5 FT PB2B5
RACEWAY COVER 10 FT PB2C10
RACEWAY COVER 5 FT PB2C5

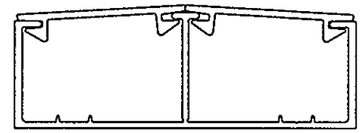

SHOWN ASSEMBLED.
SAME ASSEMBLY DIMENSIONS
AS FULL WIDTH COVERS.

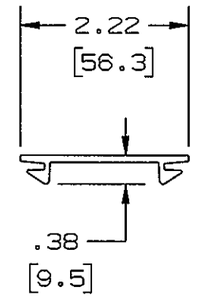

RACEWAY SPLIT COVER 10 FT PB2SPL10
RACEWAY SPLIT COVER 5 FT PB2SPL5

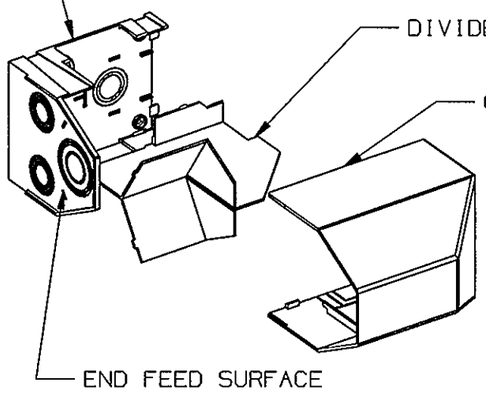

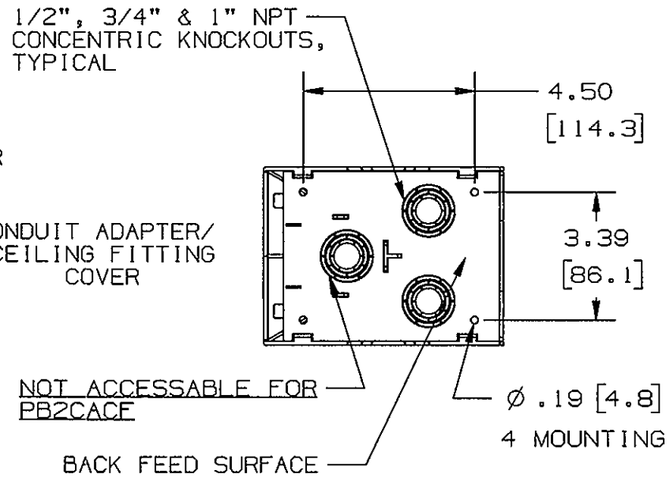

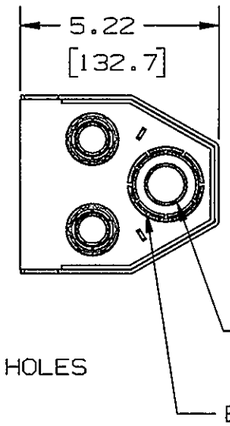

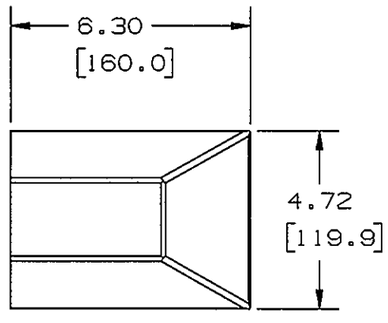

CONDUIT ADAPTER/CEILING FITTING PB2CACF

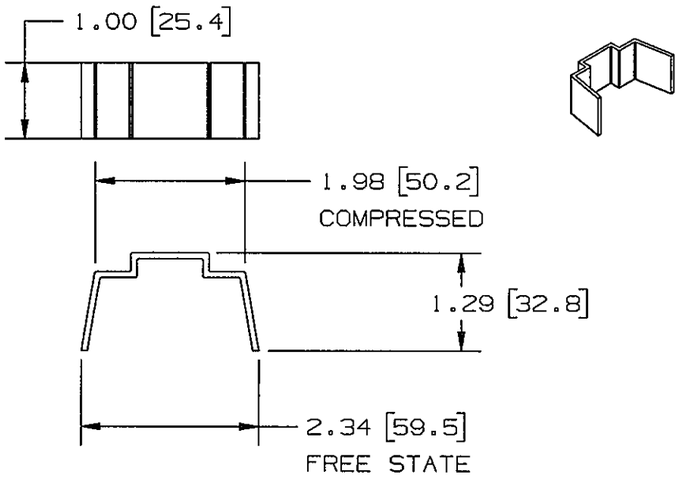

WIRE CLIP PB2WC

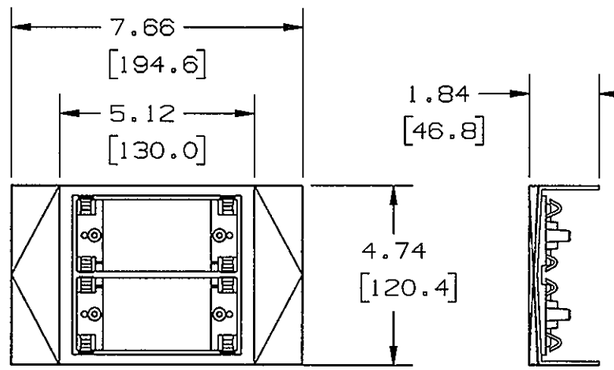

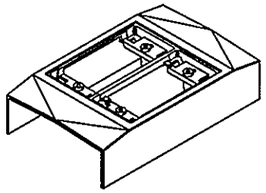

2 GANG INLINE DEVICE BOX PB2IND2G

NOTES:
1. ALL DIMENSIONS IN INCHES AND [mm].
2. NOT FOR USE WITH RW90 CONDUCTOR.

CODE 74545

LIST OF PARTS

DESCRIPTION	MATERIAL	FINISH
CONDUIT/CEIL. ADAPT. BASE	PVC	OFFICE WHITE
CONDUIT/CEIL. ADAPT. COVER	PVC	OFFICE WHITE
CONDUIT/CEIL. ADAPT. DIVIDER	PVC	OFFICE WHITE
RACEWAY BASE	PVC	OFFICE WHITE
RACEWAY COVERS	PVC	OFFICE WHITE
WIRE CLIP	PVC	OFFICE WHITE
DEVICE BOX	PVC	OFFICE WHITE

DIMENSION SHEET FOR CAT. NO. SEE DRAWING

REPAIRABLE ☐ NON-REPAIRABLE ☒

SYM	REVISIONS	APP	DATE
2	ADDED NOTE 2 PER DCN 22260; RM	DJP	7/14/16
1	RELEASED PER DCN11790	SRE	6/9/04

THE DESIGN AND DIMENSIONS OF THE PRODUCT SHOWN ON THIS DRAWING ARE SUBJECT TO CHANGE WITHOUT NOTICE

TITLE
PB2 BASETRAK

TOLERANCES UNLESS OTHERWISE SPECIFIED
.XX = ±.01
.XXX = ±.005
ANGLES = ±2°

WIRING DEVICE-KELLEMS
HUBBELL INCORPORATED
SHELTON, CT

DR. BY SRE	APP. BY SRE
TR. BY	SCALE ---
CHK. BY SRE	DATE 3/17/04

M-9310 B 2