M-13594 | 1

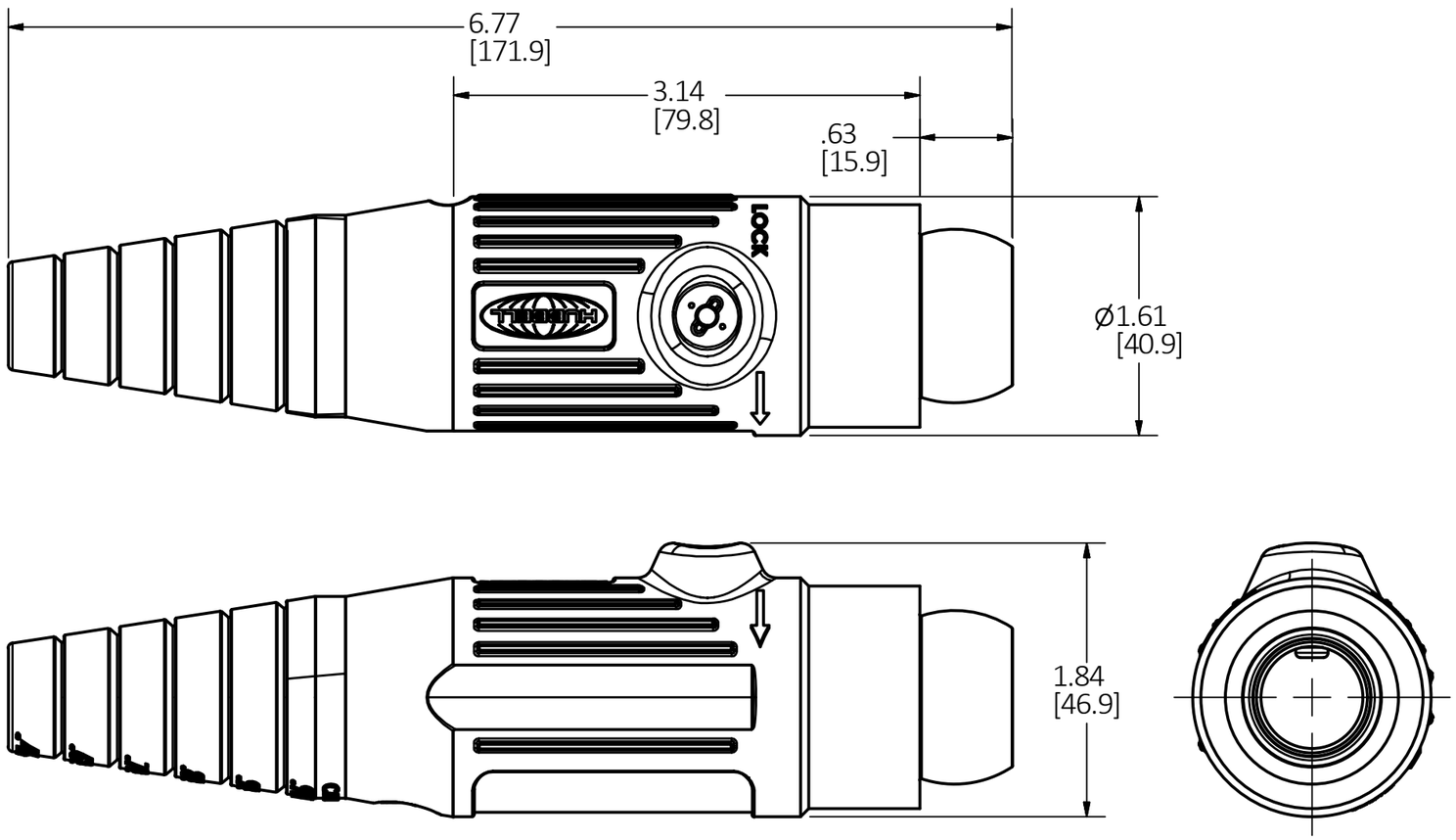

NOTES:

1. DIMENSIONS ARE IN INCHES ±.02 [mm] ±.5
2. RATING: 600VAC/250VDC 400AMP.
3. ENCLOSURE RATING: UL TYPE 4X, WHILE IN USE.
4. CABLE DIAMETER RANGE: Ø .720in. [18.2mm] - Ø1.020in.[25.9mm].
5. CABLE SIZE 3/0 AWG - 4/0, COPPER ONLY.
6. STRAIN RELIEF WIRE & COPPER FOIL NOT SHOWN.

HUBBELL CAT. NO.	COLOR
HBL18400FBK	BLACK
HBL18400FW	WHITE
HBL18400FGN	GREEN
HBL18400FR	RED
HBL18400FBL	BLUE
HBL18400FO	ORANGE
HBL18400FBN	BROWN
HBL18400FY	YELLOW

LIST OF PARTS

DESCRIPTION	MATERIAL	FINISH
BODY	TPE	
CONTACT	BRASS	
SET SCREWS (2)	STEEL	
STRAIN RELIEF WIRE	COPPER	
COPPER FOIL	COPPER	

DIMENSION SHEET FOR CAT. NO.
SEE TABLE

REV	DESCRIPTION	APP	DATE
1	4/6/15 NEW RELEASE PER DCN 23026 CAC		

THE DESIGN AND DIMENSIONS OF THE PRODUCT SHOWN ON THIS DRAWING ARE SUBJECT TO CHANGE WITHOUT NOTICE. DIMENSIONS ARE IN INCHES [mm].

TITLE

SINGLE POLE SERIES 18 FEMALE 400A

WIRING DEVICE-KELLEMS
HUBBELL INCORPORATED
SHELTON, CT

TOLERANCES UNLESS OTHERWISE SPECIFIED
.XX = ± .01
.XXX= ± .005
ANGLE TOL. ±2°

DR. BY	CAC	SCALE	1 : 1
CHK. BY		DATE	03/29/2017

B

M-13594

1

CAGE CODE 74545