M-8914 | 2

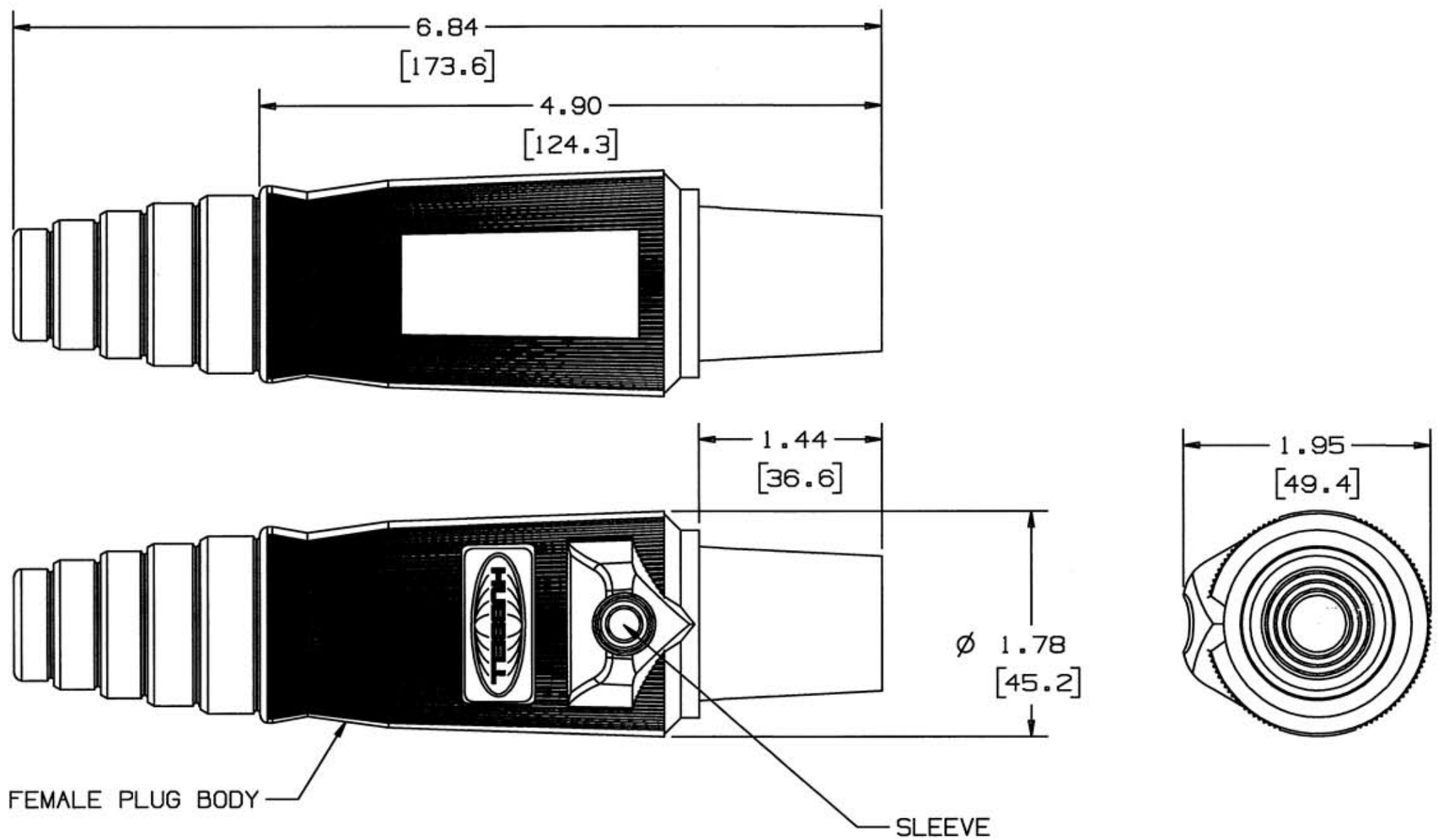

NOTES:
1. DIMENSIONS ARE INCHES ±.02
[mm] ±.5
2. CABLE SIZE: #4 AWG - 4/0, COPPER ONLY

HUBBELL CAT. NO.	COLOR
HBLFBBK	BLACK
HBLFBW	WHITE
HBLFBGN	GREEN
HBLFBBR	RED
HBLFBBL	BLUE
HBLFBO	ORANGE
HBLFBBN	BROWN
HBLFBY	YELLOW

LIST OF PARTS

DESCRIPTION	MATERIAL	FINISH
FEMALE PLUG BODY	TPE	SEE TABLE
SLEEVE	NYLON	BLACK

SYM	REVISIONS	APP	DATE
2	REMOVE MOLDED IN TEXT FROM VIEWS, ADDING REFERANCE SET TO THIS DRAWING & FILE D-58727-01 REMOVE Ø1.06 [27.0] & Ø1.22 [31.0] ADD ±.02 & ±.5 TO NOTE 1 LIST OF PARTS DESCRIPTION FEMALE PLUG BODY WAS FEMALE PLUG PER DCN 11484 TwB	TwB	12/15/04
1	RELEASED PER DCN 10992 MJM TB	TwB	6/26/03

THE DESIGN AND DIMENSIONS OF THE PRODUCT SHOWN ON THIS DRAWING ARE SUBJECT TO CHANGE WITHOUT NOTICE

TITLE
SINGLE POLE
FEMALE PLUG BODY

TOLERANCES UNLESS OTHERWISE SPECIFIED
FRACTIONS ±1/64
DECIMALS ±.005
ANGLES ±2°

WIRING DEVICE-KELLEMS
HUBBELL INCORPORATED
BRIDGEPORT, CT

DR. BY MJM | APP. BY
TR. BY | SCALE 1:1
CHK'D BY | DATE 6/11/03

DIMENSION SHEET FOR CAT. NO. SEE TABLE

REPAIRABLE ☐ NON-REPAIRABLE ☒

B

M-8914

2

CODE 74545