REV	DATE	DESCRIPTION	ECO	BY	C'H'K.
A	12/10/2012	NEW SALES DRAWING CREATED	29601	HM	MA

STRANDED COPPER CONDUCTOR ACCOMMODATED			BOLT SIZE	METRIC BOLT SIZE	COLOR CODE	DIE INFORMATION		MECHANICAL				HYDRAULIC						DIELESS (# CRIMPS)	WIRE STRIP LENGTH
AWG	NAVY	METRIC SIZE (CLASS 2)				DIE INDEX	TYPE	Y1MRTC 5	OUR840	MD6 MD7	MD6--R2 MD7-34R	Y34A Y34B 7 Y34BH	Y35, Y39 Y750, PAT750	Y46 PAT46 4	Y45 3	Y48B	Y60BHU		
1000 kcmil CLASS B,C	-----	500mm² STR [28.3]	1/2	M12	WHITE	27	WHITE DIE SET	-----	-----	-----	-----	-----	-----	P44RT (4)	S44RT (4)	C44R (2)	L44RT (2)	HYDRAULIC: Y644 (1) PAT644 (1) PAT81KFT - SERIES (4) Y81KFT-SERIES (4)	3-1/16"
							NEST / INDENTOR	-----	-----	-----	-----	-----	-----	P44D (2) / P44PR	-----	C44D (2) / Y48PR	-----		

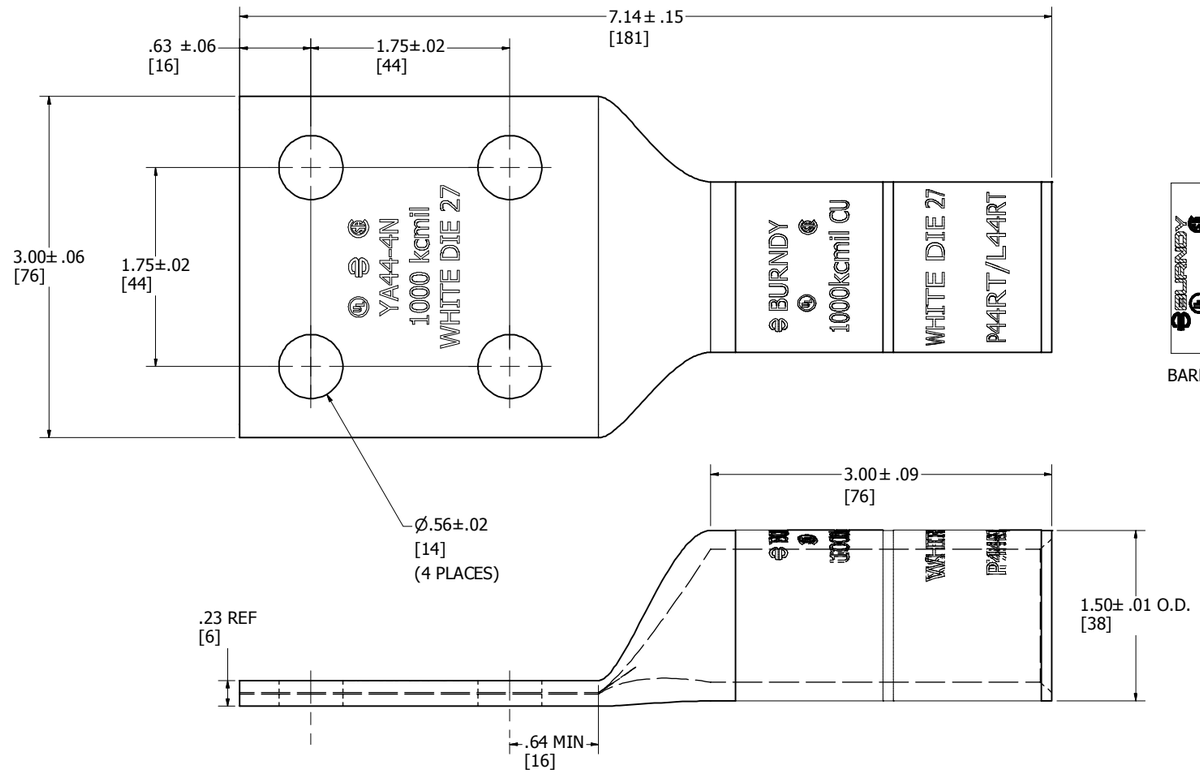

BARREL MARKING

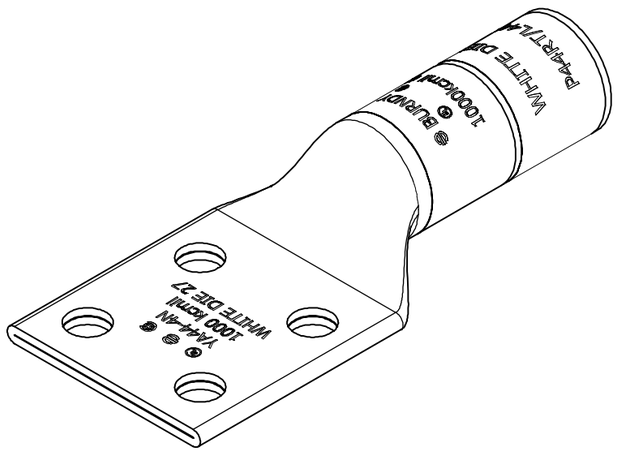

NOTES:

1. MATERIAL: COPPER TUBING
2. FINISH: TIN PLATED.
3. CATALOG # PT6515 ADAPTOR IS REQUIRED TO USE "U" DIES IN Y45 SERIES TOOLS.
4. CATALOG # PUADP-1 ADAPTOR IS REQUIRED TO USE "U" DIES IN Y46 SERIES TOOLS.
5. PERMANENT DIE IN TOOLING.
6. DIMENSIONS IN BRACKETS [ ] ARE IN MILLIMETERS ROUNDED OFF TO THE NEAREST MILLIMETER, UNLESS OTHERWISE NOTED, AND ARE FOR REFERENCE ONLY.
7. FOR USE BY CUSTOMERS THAT HAVE THIS HYPRESS.™ NO NEW Y34A HYPRESS™ TOOLS ARE BEING PROCESSED. Y34A USES A--D TYPE NEST DIES.
8. UL LISTED & CSA CERTIFIED WIRE CONNECTOR.

TO ORDER BURNDY® PRODUCTS CALL

UNITED STATES
1-800-346-4175 (LONDONDERRY, NH)

CANADA:
1-800-361-6975 (QUEBEC)
1-800-387-6487 (ALL OTHER PROVINCES)

FOR PRODUCT INFO: http://www.burndy.com

HYLUG™

ITEM NO: 510014

CAT. NO: YA444N

DRAWN BY:	HMALHOTRA	12/10/2012	
CHECKER:	J. MICHAUD	5/2/2013	
DSN APRVL:	R. ROMAN	4/26/2013	
MFG APRVL:	M. KNAPTON	5/8/2013	
QA APRVL:	T. WATTS	4/9/2013	
MKT APRVL:	J. SYLVIA	5/3/2013	
PROD FAM:	CM&R COMPRESSION		
PROJECT #:	--	SIZE	
DOCUMENT TYPE:	PRODUCTION	D	
REL LEVEL:	Released		

BURNDY®

DRAWING NO	REV
50015742	A
SHEET 1 OF 1	