M-1476	4

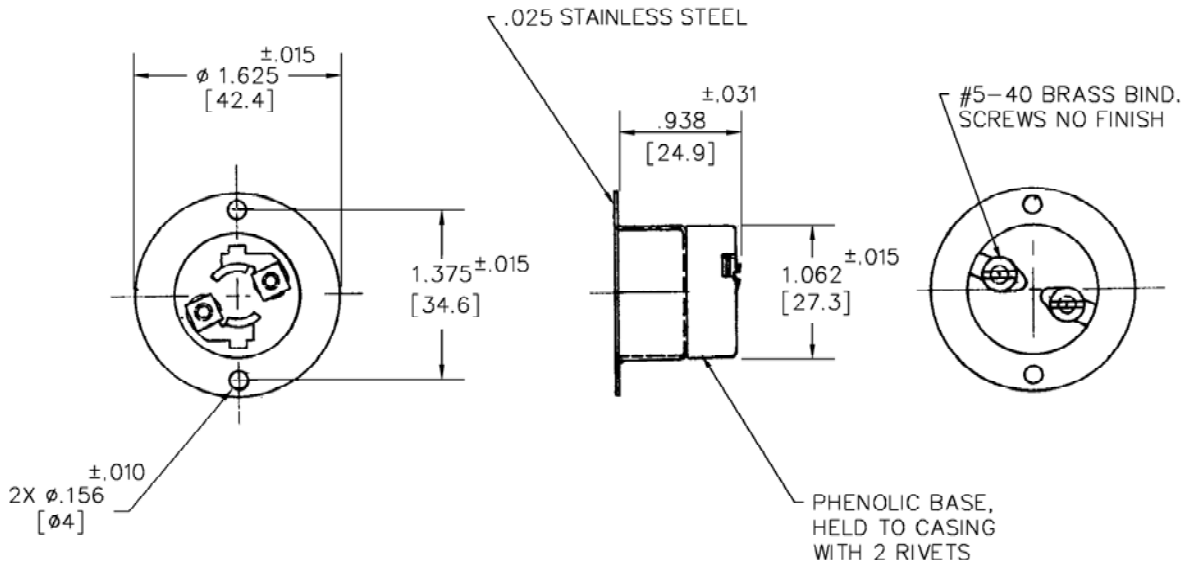

LIST OF PARTS

DESCRIPTION	MATERIAL	FINISH
BASE	PHENOLIC	BLACK
CONTACT BLADES	BRASS	
INSERT	BRASS	ANNEAL
CUPPED WASHER	BRASS	
CASING	ST. STEEL	
BINDING SCREWS	BRASS	
RIVETS	BRASS	

SUPERSEDES DRAWING
DATED 1/17/38

SYM	REVISIONS	APP	DATE
4	REDRAWN ON NEW FORMAT, WAS "A" SIZE; CASING: ST. STEEL WAS BRASS; CONVERTED DIMS FROM FRACTION TO DECIMAL PER DCN 16134 RCM	DJP	11/18/09

THE DESIGN AND DIMENSIONS OF THE PRODUCT SHOWN ON THIS DRAWING ARE SUBJECT TO CHANGE WITHOUT NOTICE

TITLE
15A, 125V 2W
INLET

TOLERANCES UNLESS OTHERWISE SPECIFIED
FRACTIONS ±1/64
DECIMALS ±.005
ANGLES ±2°

WIRING DEVICE-KELLEMS
HUBBELL INCORPORATED
BRIDGEPORT, CT

DR. BY	CJN	APP. BY	
IR. BY	RCM	SCALE	NONE
CHK'D BY	CJN	DATE	11/18/09

DIMENSION SHEET FOR CAT. NO.
HBL7466

REPAIRABLE ☐ NON-REPAIRABLE ☒

B

M-1476

4

CODE 74545