M-10390 | 1

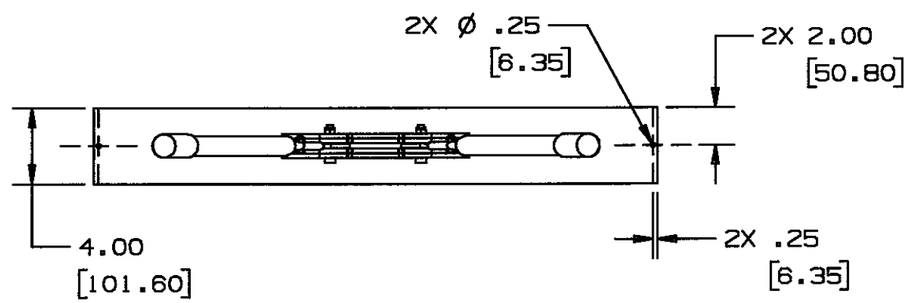

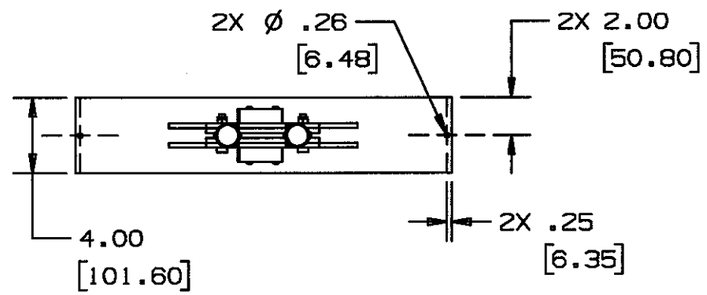

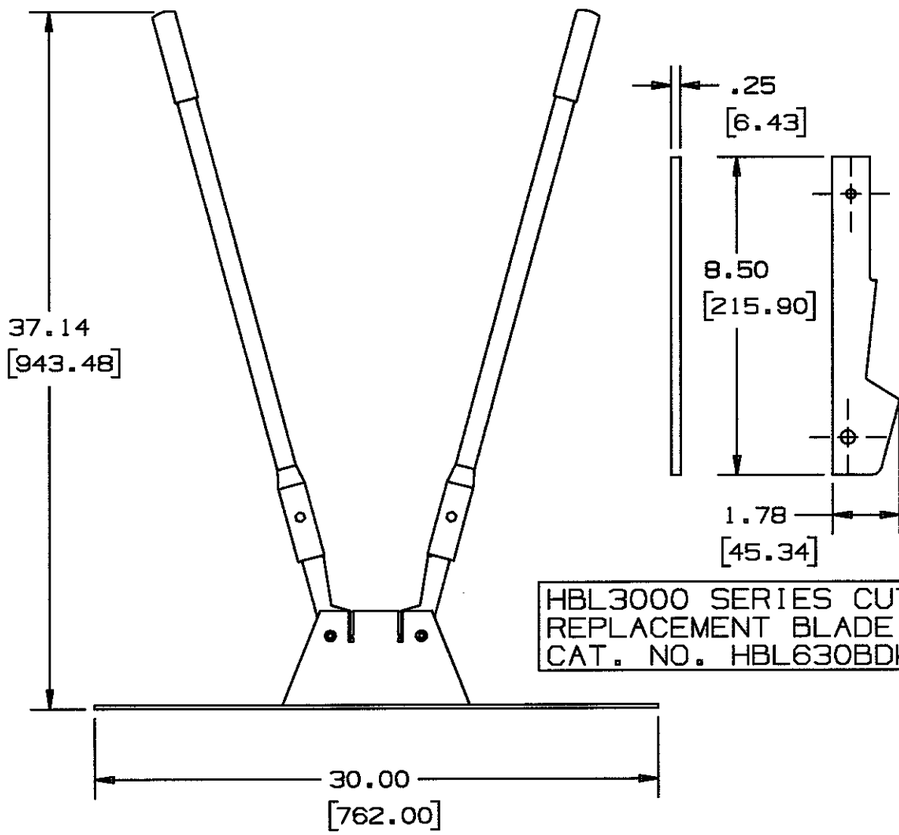

HBL3000 SERIES CUTTER
REPLACEMENT BLADE
CAT. NO. HBL630BDK

HBL3000 SERIES BASE CUTTER
CAT. NO. HBL630B

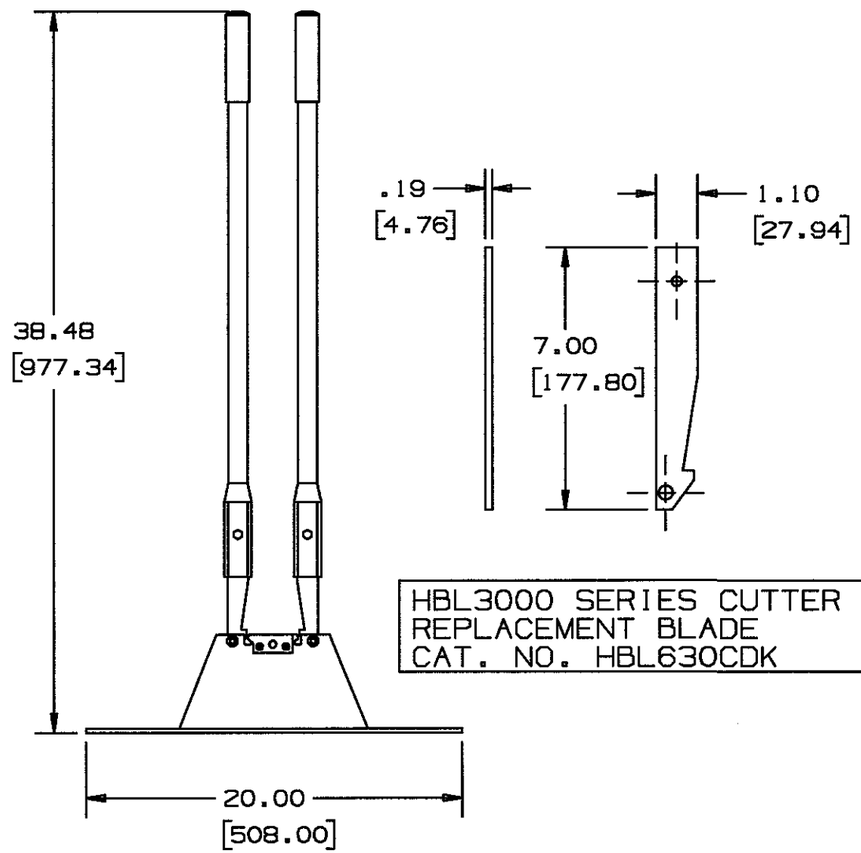

HBL3000 SERIES CUTTER
REPLACEMENT BLADE
CAT. NO. HBL630CDK

HBL3000 SERIES COVER CUTTER
CAT. NO. HBL630C

NOTE: ALL DIMENSIONS IN INCHES AND [MM]

CODE 74545

LIST OF PARTS

DESCRIPTION	MATERIAL	FINISH
RACEWAY CUTTER ASSY.	STEEL	PAINTED
BLADE	STEEL	

SYM	REVISIONS	APP	DATE
1	RELEASED PER DCN13553		11/14/06

THE DESIGN AND DIMENSIONS OF THE PRODUCT SHOWN ON THIS DRAWING ARE SUBJECT TO CHANGE WITHOUT NOTICE

TITLE

RACEWAY CUTTERS
HBL3000 SERIES

TOLERANCES UNLESS OTHERWISE SPECIFIED
FRACTIONS ±1/64
DECIMALS ±.005
ANGLES ±2°

WIRING DEVICE-KELLEMS
HUBBELL INCORPORATED
BRIDGEPORT, CT

DR. BY SRE	APP. BY
TR. BY	SCALE 1:1
CHK'D BY	DATE 11/14/06

DIMENSION SHEET FOR CAT. NO.

REPAIRABLE ☐

NON-REPAIRABLE ☒

B

M-10390

1