M-6282

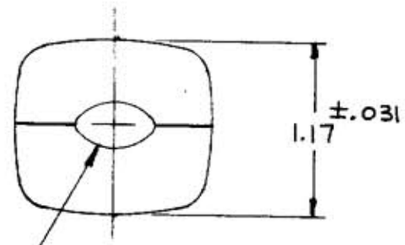

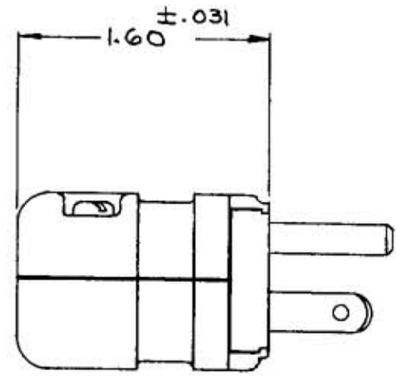

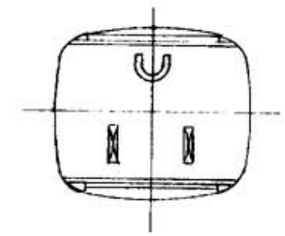

CORD CLAMPS ACCOMMODATE THE FOLLOWING:
5966-VBLK -.230-.360 DIA. INSULATION
5967-VBLK - .360-.575 DIA. INSULATION

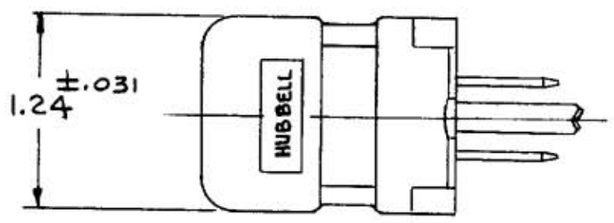

LIST OF PARTS

DESCRIPTION	MATERIAL	FINISH
HOUSING	NYLON	BLACK
CONTACT BLADES	BRASS	I-WHITE
GR CONTACT BLADE	BRASS	
CORD CLAMP SCR.	STEEL	BLACK

SYM	REVISIONS	APP	DATE

DIMENSION SHEET FOR CAT. NO. 5966-VBLK & 5967-VBLK

REPAIRABLE ☐ NON-REPAIRABLE ☒

B

M-6282

TITLE
15A. 125V. 3-WIRE DEAD FRONT VALISE PLUG WITH INSULATION DISPLACEMENT TERMINALS

TOLERANCES UNLESS OTHERWISE SPECIFIED
FRACTIONS ± 1/64
DECIMALS ± .005
ANGLES ± 2°

HARVEY HUBBELL, INC.
BRIDGEPORT, CONN.

DR. BY A. J. L. APP. BY D. L.
TR. BY SCALE FULL
CHK'D. BY DATE 1-29-82

CODE 74545