M-8185 2

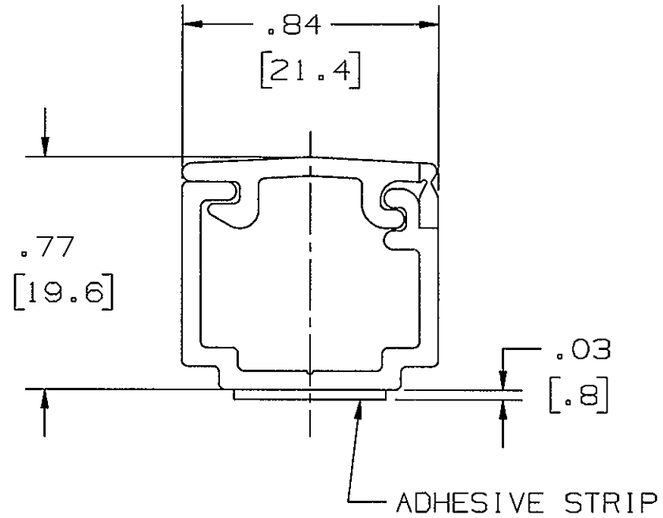

RACEWAY - 5 FT = PP1BC5
RACEWAY - 7 FT = PP1BC7
RACEWAY, WITH ADHESIVE, 5 FT = PP1ABC5
RACEWAY, WITH ADHESIVE, 7 FT = PP1ABC7

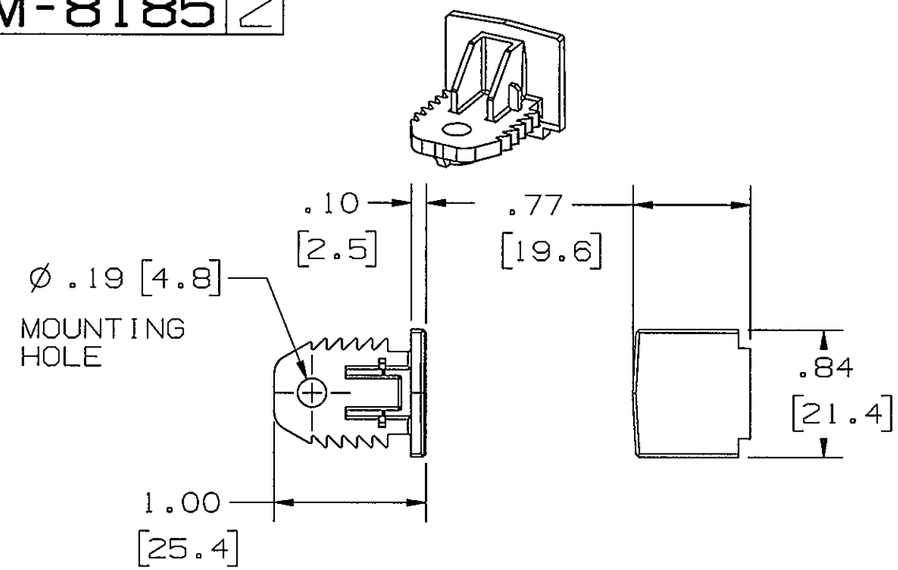

END CAP PP1EC

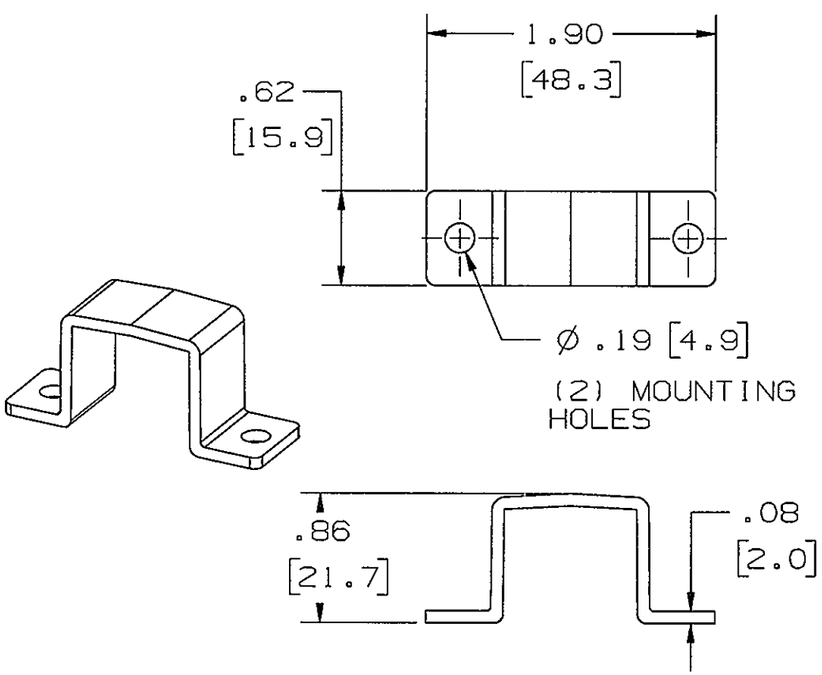

SECURITY STRAP/SPLICE COVER PP1SS

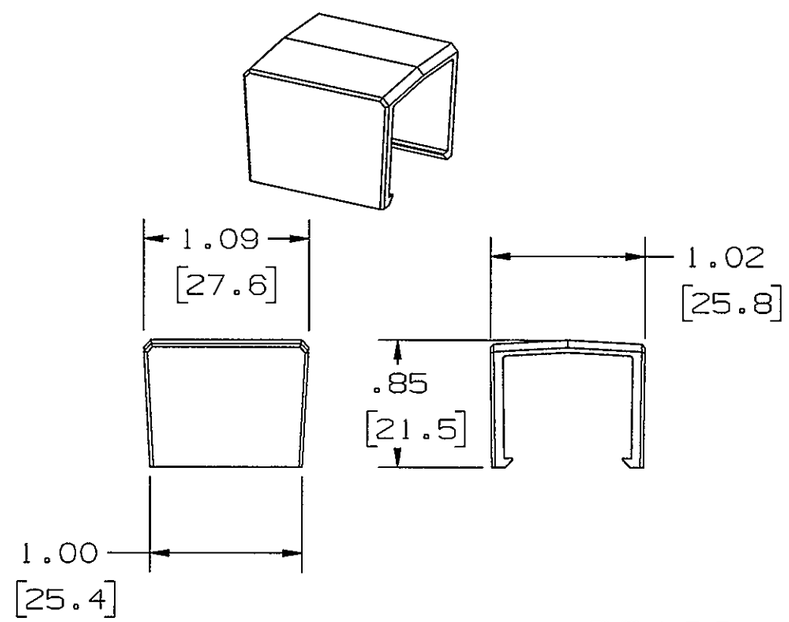

SPLICE COVER PP1SC

NOTES:
1. DIMENSIONS ARE IN INCHES AND [mm].
2. NOT FOR USE WITH RW90 CONDUCTOR.

LIST OF PARTS

DESCRIPTION	MATERIAL	FINISH
RACEWAY	PVC	OFFICE WHITE
END CAP	PVC	OFFICE WHITE
SPLICE COVER	PVC	OFFICE WHITE
SECURITY STRAP/SPLICE COVER	PVC	OFFICE WHITE

SYM	REVISIONS	APP	DATE
2	ADDED [mm] DIMENSIONS ADDED NOTES PER DCN 22260; RM DJP	DJP	7/14/16
1	RELEASED PER DCN7604	SRE	4/28/00

THE DESIGN AND DIMENSIONS OF THE PRODUCT SHOWN ON THIS DRAWING ARE SUBJECT TO CHANGE WITHOUT NOTICE

TITLE
RACEWAY & FITTINGS, PP1 PREMISETRAK

TOLERANCES UNLESS OTHERWISE SPECIFIED
.XX = ±.01
.XXX = ±.005
ANGLES = ±2°

WIRING DEVICE-KELLEMS
HUBBELL INCORPORATED
SHELTON, CT

DR. BY SRE	APP. BY SRE
TR. BY	SCALE ---
CHK. BY SRE	DATE 8/12/99

DIMENSION SHEET FOR CAT. NO. SEE SHEET

REPAIRABLE ☐ NON-REPAIRABLE ☒

B

M-8185

N

CODE 74545