# M-10197 | 1

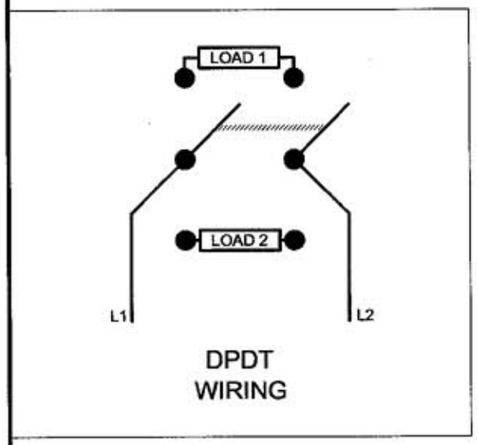


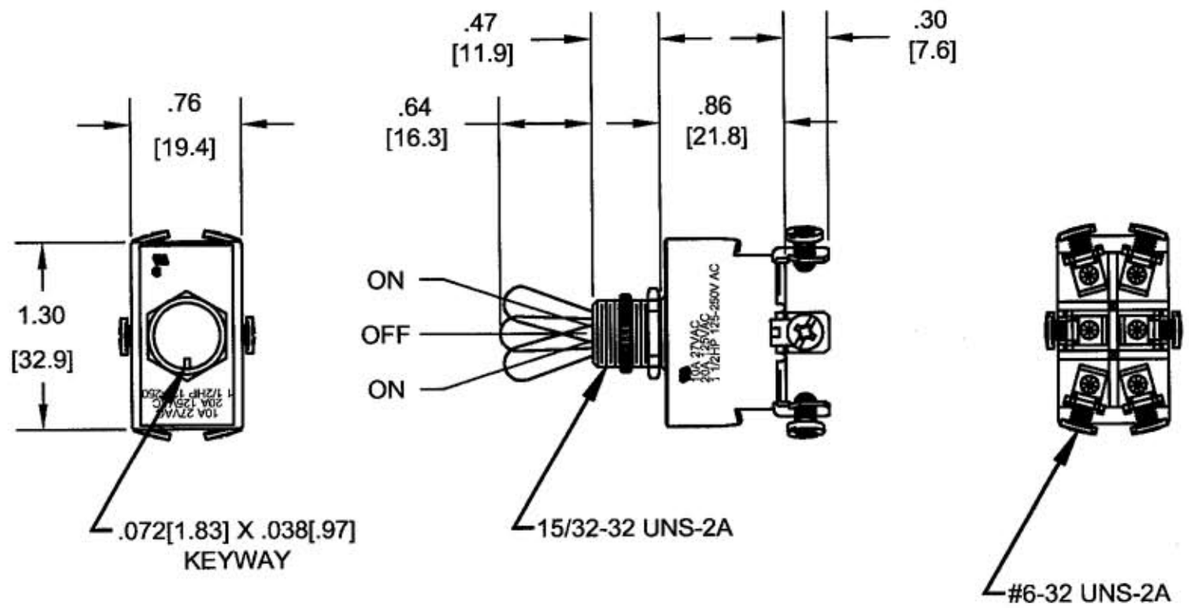


NOTES: (UNLESS OTHERWISE SPECIFIED):

1) DIMENSIONS ARE: INCHES
[MM]

2) SUPPLIED ASSEMBLED WITH: KNURL NUT AND HEX NUT.

3) RECOMMENDED PANEL MOUNT OPENING 0.50 [12.7].

4) RATING: 10 AMP, 277VAC
20 AMP, 125VAC
1-1/2 HP, 125-250

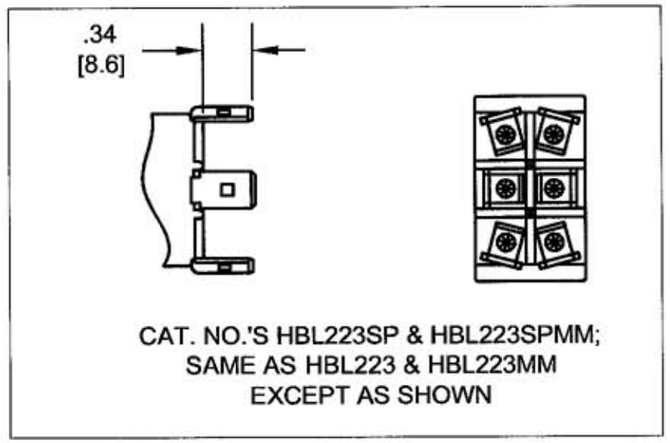


| CATALOG NO. | TERMINAL TYPE | SWITCH DESCRIPTION |
|---|---|---|
| HBL223MM | SCREW, #6-32UNS-2B | DOUBLE POLE, DOUBLE THROW, MOMENTARY ON |
| HBL223SPMM | SPADE, .250 MALE TAB NEMA | DOUBLE POLE, DOUBLE THROW, MOMENTARY ON |
| HBL223 | SPADE, .250 MALE TAB NEMA | DOUBLE POLE, DOUBLE THROW |
| HBL223SP | SCREW, #6-32UNS-2B | DOUBLE POLE, DOUBLE THROW |

LIST OF PARTS

| DESCRIPTION | MATERIAL | FINISH |
|---|---|---|
| | | |

DIMENSION SHEET FOR CAT. NO. SEE TABLE

REPAIRABLE ☐ NON-REPAIRABLE ☒

| SYM | REVISIONS | APP | DATE |
|---|---|---|---|
| 1 | RELEASED FOR PRODUCTION PER DCN # 13193. JMN | JPP | 8/2/06 |

THE DESIGN AND DIMENSIONS OF THE PRODUCT SHOWN ON THIS DRAWING ARE SUBJECT TO CHANGE WITHOUT NOTICE

TITLE
TOGGLE SWITCH
DOUBLE POLE, DOUBLE THROW

TOLERANCES UNLESS OTHERWISE SPECIFIED
FRACTIONS ±1/64
DECIMALS ±.005
ANGLES ±2°

WIRING DEVICE–KELLEMS
HUBBELL INCORPORATED
BRIDGEPORT, CT

| | |
|---|---|
| DR. BY JMN | APP. BY JPP |
| TR. BY | SCALE NONE |
| CHK'D BY JPP | DATE 8/2/06 |

B

M-10197

1

CODE 74545