DRAWING NO. SD008453-01

REV	DATE	DESCRIPTION	ECO	BY	C'H'K.
A	9/18/2009 5:00:00 PM	REDRAW IN PRO-E --	18603	DK	BSK

FIG. NO.	CAT. NO.	CAT. NO.	CABLE RANGE 'A' FROM	CABLE RANGE 'A' TO	B	C	D	E	F	H	K DIA.	VA L1	VVA L2	N	T	W	J
2	VVA4C <2>	VA4C	#4 SOL.(.204)	#8 SOL.(.129)	.69 [18]	.75 [19]	.84 [21]	---		.69 [18]	.44 [11]	2.38 [61]	3.44 [87]	.38 [10]	.22 [6]	.81 [21]	KS20
2	VVA2C <2>	VA2C	#2 STR.(.291)	#8 SOL.(.129)	.81 [21]	.81 [21]	.88 [22]	---		.81 [21]	.44 [11]	2.75 [70]	4.06 [103]	.41 [10]	.25 [6]	1.00 [25]	KS23
2	VVA25 <2>	VA25	1/0 STR.(.373)	#6 SOL.(.162)	.88 [22]	.88 [22]	.91 [23]	---		1.00 [25]	.44 [11]	2.88 [73]	4.31 [109]	.44 [11]	.25 [6]	1.19 [30]	KS25
2A	VVA252 <2>	VA252	1/0 STR.(.373)	#6 SOL.(.162)	.88 [22]	.88 [22]	1.66 [42]	0.88 [22]		1.00 [25]	.34 [9]	3.63 [92]	5.06 [129]	.34 [9]	.25 [6]	1.19 [30]	KS25
1	VVA28	VA28	4/0 STR.(.528)	1/0 STR.(.373)	1.09 [28]	1.06 [27]	1.00 [25]	---		1.06 [27]	.44 [11]	2.88 [73]	4.13 [105]	.53 [13]	.31 [8]	1.69 [43]	V28
1A	VVA282	VA282	4/0 STR.(.528)	1/0 STR.(.373)	1.09 [28]	1.06 [27]	1.88 [48]	1.00 [25]		1.06 [27]	.44 [11]	3.75 [95]	5.00 [127]	.41 [10]	.31 [8]	1.69 [43]	V28
1A	VVA282N <1>		4/0 STR.(.528)	1/0 STR.(.373)		1.06 [27]		1.75 [44]			.56 [14]		6.19 [157]	.63 [16]	.31 [8]	1.69 [43]	
1	VVA30	VA30	300 Kcmil(.630)	1/0 STR.(.373)	1.09 [28]	1.13 [29]	1.09 [28]	---		1.25 [32]	.44 [11]	3.25 [83]	4.63 [118]	.63 [16]	.31 [8]	1.91 [49]	V30
1A	VVA302	VA302	300 Kcmil(.630)	1/0 STR.(.373)	1.09 [28]	1.13 [29]	XXX <9>	1.00 [25]		1.25 [32]	.44 [11]	4.06 [103]	5.44 [138]	.44 [11]	.31 [8]	1.91 [49]	V30
1A	VVA302N <1>		300 Kcmil(.630)	1/0 STR.(.373)		1.13 [29]		1.75 [44]			.56 [14]		XXX <9>	.63 [16]	.31 [8]	1.94 [49]	
1	VVA34	VA34	500 Kcmil(.814)	300 Kcmil(.630)	1.31 [33]	1.38 [35]	1.41 [36]	---		1.50 [38]	.56 [14]	3.81 [97]	5.31 [135]	.81 [21]	.38 [10]	2.22 [56]	V34
1A	VVA342	VA342	500 Kcmil(.814)	300 Kcmil(.630)	1.31 [33]	1.38 [35]	XXX <9>	1.00 [25]		1.50 [38]	.44 [11]	4.25 [108]	5.75 [146]	.44 [11]	.38 [10]	2.22 [56]	V34
1A	VVA342N <1>		500 Kcmil(.814)	300 Kcmil(.630)		1.38 [35]		1.75 [44]			.56 [14]		6.88 [175]	.63 [16]	.38 [10]	2.25 [57]	
1B	VVA344	VA344	500 Kcmil(.814)	300 Kcmil(.630)	1.31 [33]	1.88 [48]	1.91 [49]	1.00 [25]	1.00 [25]	1.50 [38]	.44 [11]	4.25 [108]	5.75 [146]	.44 [11]	.38 [10]	2.22 [56]	V34
1	VVA40	VA40	800 Kcmil(1.031)	500 Kcmil(.814)	1.34 [34]	1.63 [41]	1.66 [42]	---		1.75 [45]	.69 [18]	4.50 [114]	6.38 [162]	.94 [24]	.38 [10]	2.63 [67]	V40
1A	VVA402	VA402	800 Kcmil(1.031)	500 Kcmil(.814)	1.34 [34]	1.63 [41]	XXX <9>	1.13 [29]		1.75 [45]	.44 [11]	4.94 [125]	6.81 [173]	.50 [13]	.38 [10]	2.63 [67]	V40
1A	VVA402N <1>		800 Kcmil(1.031)	500 Kcmil(.814)		1.63 [41]		1.75 [44]			.56 [14]		7.69 [195]	.63 [16]	.38 [10]	XXX <9>	
1B	VVA404	VA404	800 Kcmil(1.031)	500 Kcmil(.814)	1.34 [34]	1.88 [48]	XXX <9>	1.00 [25]	1.00 [25]	1.75 [45]	.44 [11]	4.75 [121]	6.63 [168]	.44 [11]	.38 [10]	2.63 [67]	V40
1B	VVA404N <1>		800 Kcmil(1.031)	500 Kcmil(.814)		3.00 [76]		1.75 [44]	1.75 [44]		.56 [14]		7.69 [195]	.63 [16]	.38 [10]	XXX <9>	
1	VVA44	VA44	1000 Kcmil(1.152)	750 Kcmil(.998)	1.41 [36]	1.88 [48]	1.72 [44]	---		1.94 [49]	.69 [18]	4.81 [122]	6.81 [173]	1.00 [25]	.50 [13]	2.88 [73]	V44
1A	VVA442	VA442	1000 Kcmil(1.152)	750 Kcmil(.998)	1.41 [36]	1.88 [48]	2.38 [60]	1.25 [32]		1.94 [49]	.56 [14]	5.44 [138]	7.44 [189]	.53 [13]	.50 [13]	2.88 [73]	V44
1A	VVA442N <1>		1000 Kcmil(1.152)	750 Kcmil(.998)		1.88 [48]		1.75 [44]			.56 [14]		8.13 [207]	.63 [16]	.50 [13]	2.88 [73]	
1B	VVA444	VA444	1000 Kcmil(1.152)	750 Kcmil(.998)	1.41 [36]	2.13 [54]	2.09 [53]	1.13 [29]	1.13 [29]	1.94 [49]	.44 [11]	5.19 [132]	7.19 [183]	.50 [13]	.50 [13]	2.88 [73]	V44
1B	VVA444N <1>		1000 Kcmil(1.152)	750 Kcmil(.998)		3.00 [76]		1.75 [44]	1.75 [44]		.56 [14]		8.06 [205]	.63 [16]	.50 [13]	2.88 [73]	
3	VVA46	VA46	1500 Kcmil(1.412)	1000 Kcmil(1.152)	2.00 [51]	2.25 [57]	XXX <9>	---		2.88 [73]	.81 [21]	5.38 [137]	7.63 [194]	1.13 [29]	.56 [14]	3.25 [83]	V46
3A	VVA462	VA462	1500 Kcmil(1.412)	1000 Kcmil(1.152)	2.00 [51]	2.25 [57]	XXX <9>	1.38 [35]		2.88 [73]	.56 [14]	6.06 [154]	8.31 [211]	.63 [16]	.56 [14]	3.25 [83]	V46
3A	VVA462N <1>		1500 Kcmil(1.412)	1000 Kcmil(1.152)		2.25 [57]		1.75 [44]			.56 [14]		8.69 [221]	.63 [16]	.56 [14]	3.25 [83]	
3B	VVA464	VA464	1500 Kcmil(1.412)	1000 Kcmil(1.152)	2.00 [51]	2.50 [64]	2.53 [64]	1.38 [35]	1.38 [35]	2.88 [73]	.56 [14]	6.00 [152]	8.25 [210]	.56 [14]	.56 [14]	3.25 [83]	V46
3B	VVA464N <1>		1500 Kcmil(1.412)	1000 Kcmil(1.152)		3.00 [76]		1.75 [44]	1.75 [44]		.56 [14]		8.75 [222]	.63 [16]	.56 [14]	3.25 [83]	
3	VVA48	VA48	2000 Kcmil(1.631)	1500 Kcmil(1.412)	2.25 [57]	2.63 [67]	1.03 [26]	---		3.31 [84]	.81 [21]	5.81 [148]	8.31 [211]	1.25 [32]	.63 [16]	3.75 [95]	V48
3A	VVA482	VA482	2000 Kcmil(1.631)	1500 Kcmil(1.412)	2.25 [57]	2.63 [67]	2.78 [71]	1.50 [38]		3.31 [84]	.56 [14]	6.56 [167]	9.06 [230]	.69 [18]	.63 [16]	3.75 [95]	V48
3A	VVA482N <1>		2000 Kcmil(1.631)	1500 Kcmil(1.412)		2.63 [67]		1.75 [44]			.56 [14]		9.25 [235]	.63 [16]	.63 [16]	3.75 [95]	
3B	VVA484	VA484	2000 Kcmil(1.631)	1500 Kcmil(1.412)	2.25 [57]	2.75 [70]	2.78 [71]	1.50 [38]	1.50 [38]	3.31 [84]	.56 [14]	6.5 [165]	9.00 [229]	.63 [16]	.63 [16]	3.75 [95]	V48
3B	VVA484N <1>		2000 Kcmil(1.631)	1500 Kcmil(1.412)		3.00 [76]		1.75 [44]	1.75 [44]		.56 [14]		9.25 [235]	.63 [16]	.63 [16]	3.75 [95]	

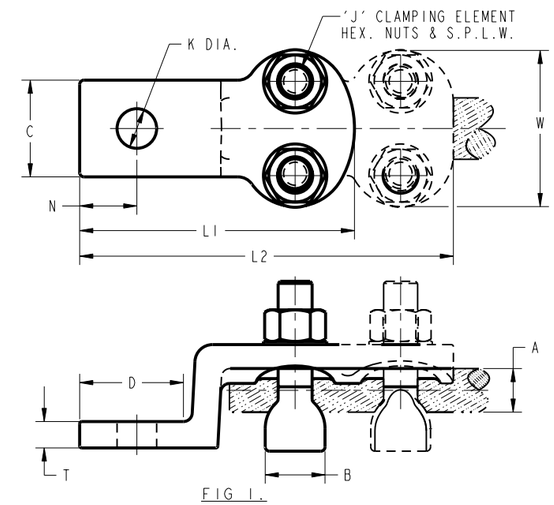

FIG 1.

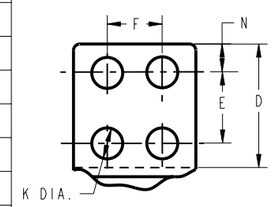

TONGUE TYPE 'B'

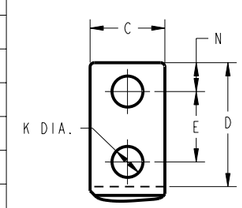

TONGUE TYPE 'A'

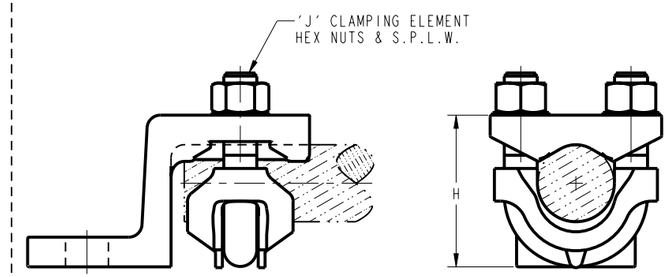

FIG 3.

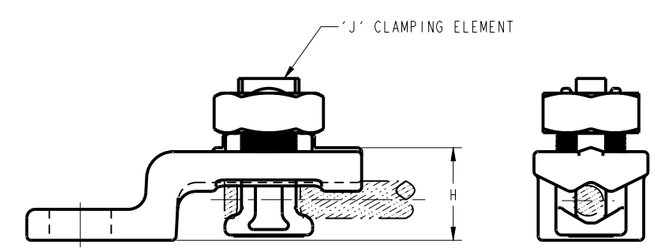

FIG 2.

NOTES:

1. MOUNTING HOLES CONFORM TO NEMA STANDARDS.
2. SERVIT, TYPE KS, USED IN PLACE OF V-BOLT.
3. DIMENSIONS IN [ ] BRACKETS ARE IN MILLIMETERS ROUNDED OFF TO THE NEAREST MILLIMETER, UNLESS OTHERWISE NOTED, AND ARE FOR REFERENCE ONLY.
4. WHERE THE CABLE TO BE TERMINATED IS SUBJECTED TO CONSIDERABLE STRAIN OR VIBRATION, THE TYPE VVA VARILUG IS RECOMMENDED. TWO DURIUM V-BOLTS WITH WIDE FLATTENED MID SECTIONS GRIP THE CABLE FIRMLY WITHOUT DAMAGING THE STRANDS. CONTACT SURFACE ON TERMINAL PAD MACHINED TO INSURE LOW CONTACT RESISTANCE WHEN INSTALLED.
5. MATERIAL: CAST COPPER ALLOY #113.
6. FOR DETAILS SEE DRAWING PD011082
7. SUPERSEDES DRAWING C-8453-3 AND C-7742
8. FOR ALL REVISIONS OF THIS DRAWING SEND COPIES TO C.L.M
9. THIS DIMENSION ILLEGIBLE IN THE PREVIOUS REVISION (REV 9).
10. FOR CAT# ENDING WITH "N" (NEMA HOLE TONGUE), DIMENSIONS B, D, L1 & J NOT AVAILABLE

TO ORDER BURNDY® PRODUCTS CALL

UNITED STATES
1-800-346-4175 (LONDONDERRY, NH)

CANADA:
1-800-361-6975 (QUEBEC)
1-800-387-6487 (ALL OTHER PROVINCES)

FOR PRODUCT INFO: http://www.burndy.com

VARILUGS

ITEM NO: --			
CAT. NO: VA-VVA (GENERAL)			
DRAWN BY: W.A.B 04/13/43			
CHECKER: O.E.B. 12/13/43			
DSN APPVL: -- --			
MFG APPVL: -- --			
QA APPVL: -- --			
MKT APPVL: -- --		SCALE: 1:1	
PROD FAM: --		DRAWING NO	REV
PROJECT #: --	SIZE	SD008453-01	A
DOCUMENT TYPE: Sales	D		
REL LEVEL: Released		SHEET 1 OF 1	

REV: PE0200