M-11789 | 1

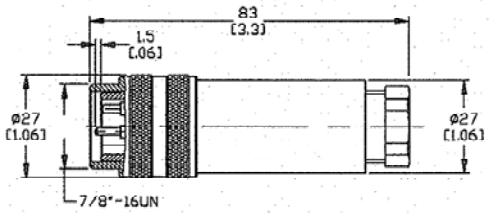

DIMENSIONS IN INCHES[mm]

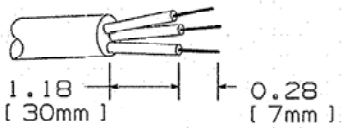

WIRE STRIP LENGTH

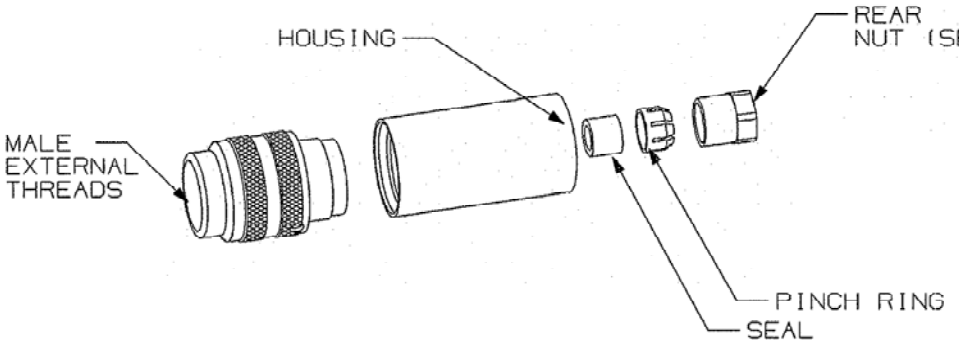

NOTES: UNLESS OTHERWISE SPECIFIED:

1. WIRE SIZE: 16AWG (1.5mm²) MAX.
2. ENCLOSURE RATING: IP67
3. OPERATING TEMPERATURE: -40° C TO 85° C.
4. c UL us RECOGNIZED.
5. RECOMMENDED REAR NUT TORQUES
   F13.5 STYLE - 9-12 IN.LBS (100-140 Ncm)
   F16 STYLE - 17.7 IN.LBS (200 Ncm).
6. RECOMMENDED TERMINAL TORQUE
   4.42 IN.LBS (50Ncm)

Male

3 POLE

Male

4 POLE

Male

5 POLE

CATALOG NO.	POLES	RATING	CABLE RANGE
HIMS03F13	3	250V/12A	0.39-0.47 IN.
HIMS04F13	4	250V/9A	0.39-0.47 IN.
HIMS04F16	4	250V/9A	0.47-0.55 IN.
HIMS05F13	5	250V/9A	0.39-.47 IN.
HIMS05F16	5	250V/9A	0.47-.55 IN.

LIST OF PARTS

DESCRIPTION	MATERIAL	FINISH
COUPLING NUT	ALUMINUM	BLACK ANODIZE
CONNECTOR SHELL	PBT	BLACK
CONTACTS	BRASS	GOLD PLATED

DIMENSION SHEET FOR CAT. NO. SEE TABLE

REPAIRABLE ☒ NON-REPAIRABLE ☐

SYM	REVISIONS	APP	DATE
1	12/1/10 NEW RELEASE PER DCN 17341 CAC	CAC	

THE DESIGN AND DIMENSIONS OF THE PRODUCT SHOWN ON THIS DRAWING ARE SUBJECT TO CHANGE WITHOUT NOTICE

TITLE STRAIGHT MALE IN-LINE MINI QUICK THD TYPES F13.5, F16

TOLERANCES UNLESS OTHERWISE SPECIFIED
FRACTIONS ±1/64
DECIMALS ±.005
ANGLES ±2°

WIRING DEVICE-KELLEMS
HUBBELL INCORPORATED
BRIDGEPORT, CT

DR. BY CAC | APP. BY CAC
TR. BY | SCALE NONE
CHK'D BY | DATE 12-2-10

B M-11789 1

CODE 74545