Twist-Lock® Devices

20A, 3 Phase 250V AC, 3 Pole, 4 Wire Grounding

Safety-Shroud® Receptacle

20A 3Ø 250V AC
NEMA L15-20R
UL/CSA
3 HP

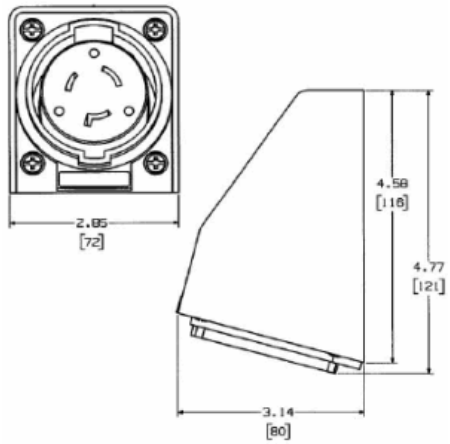

Features

- Alignment arrows with lock and unlock symbols provide a visual indication that devices are properly connected
- Catalog number and color coded voltage rating are visible even when in use
- Engineered thermoplastic housing is impact and corrosion resistant, making it suitable for heavy-duty industrial environments

Ordering Information

Description	Device Color	UPC	Catalog Number
RPT angle housing, one gang.	Gray	783585234489	HBL2420AR

Listings

Listed to UL 498
Fed.Spec. W-C-596
Certified to CSA C22.2 No.42

Specifications

Housing / Flange	Gray RPT
Terminal Retainer	Clear polycarbonate
Body Contact Carrier	Natural (white) nylon
Body Holding Screws	Steel, zinc plated
Contacts	Brass
Mounting Plate	Steel, zinc plated

Performance

Electrical

Current Interrupting	Certified for current interrupting at full rated current
Dielectric Voltage	Withstands 2,000V minimum

Mechanical

Terminal Accommodation	#16 AWG - #8 AWG solid or stranded copper wire only.
Terminal Identification	Terminals identified in accordance with UL 498

Environmental

Flammability	V2 or better per UL94/CSA 22.2 No.0.17
Moisture Resistance	IP20 Suitability
Operating Temperatures	Maximum Continuous 75°C; Minimum -40°C (w/o impact)

Accessories

Plug	HBL2421S

Resources

Customer Use Drawing
eCatalog

Dimensions in Inches (mm)

Hubbell Wiring Device-Kellems • Hubbell Incorporated (Delaware) • 40 Waterview Drive • Shelton, CT 06484
Phone (800) 288-6000 • Fax (800) 255-1031 • Specifications subject to change without notice.

Wiring Device-Kellems