TANKLESS

PRODUCT GUIDE

SAVE ENERGY.

Energy-efficient, plentiful, and endless supply of hot water.

SAVE SPACE.

Compact size and wall-mounted to free up valuable floor space.

SAVE MONEY.

The smart choice that will save you a substantial amount of energy.

A. O. Smith has delivered innovative hot water solutions for more than 80 years. A. O. Smith's selection of residential and commercial tank-type, tankless, hybrid water heaters, boilers and storage tanks is unmatched for quality and diversity. Anywhere hot water is needed, A. O. Smith provides an energy-efficient solution with long-lasting value for years after installation. A. O. Smith stands behind its products and customers with world-class service, combining cutting-edge technology with committed people who take pride in being the very best.

A. O. Smith is headquartered in Ashland City, Tennessee, home of the world's largest water heater factory. The A. O. Smith network includes five manufacturing facilities in North America, plus plants in the Netherlands, China, Turkey and India.

TANKLESS ADVANTAGE

HOW IT WORKS – THE PROCESS:

- A hot water tap is opened.
- The opened tap allows water to flow through the water heater. An internal water flow sensor detects this flow.
- Upon flow detection, the flow sensor sends the activation signal to the computer board.
- The computer automatically ignites the burner.
- As water flows through the heat exchanger, it absorbs heat from the burner.
- By the time the water exits the heater, it has reached the designated set temperature.
- When the hot water tap is closed, the water heater automatically turns off.

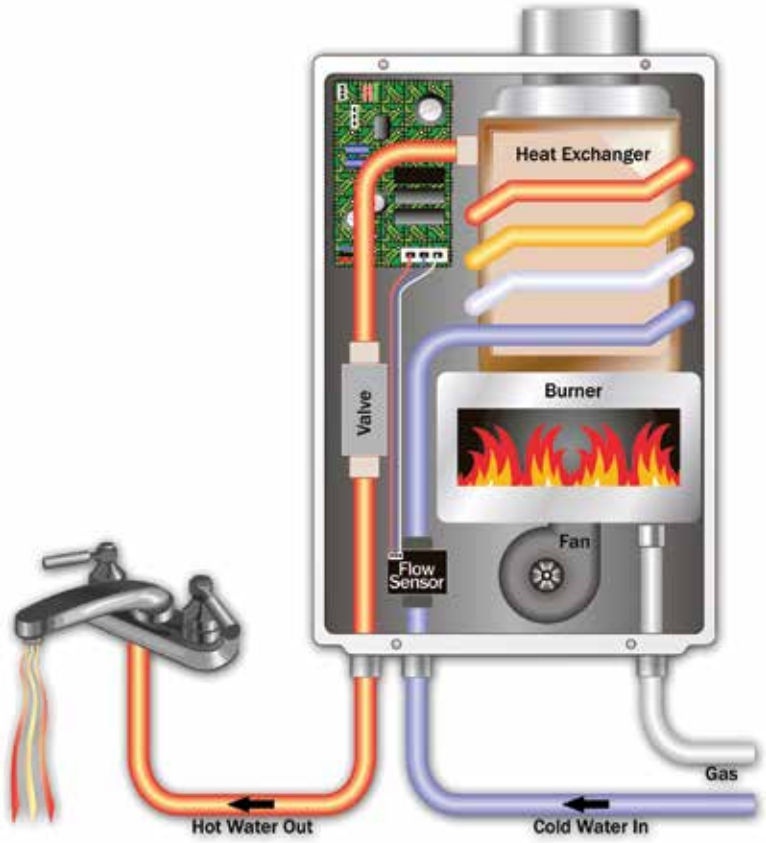

ENDLESS HOT WATER

Heating water only as it's being used means you will never run out of hot water again. After the few seconds it takes for the water to reach the designated set temperature, our water heaters will continually provide a steady flow of hot water for as long as your application needs it.

*A. O. Smith tankless water heaters provide endless hot water when sized appropriately for your home's needs.

ENERGY CONSERVATION

Provides you with continuous hot water in one of the most energy-efficient ways possible. Conventional tank-type water heaters will heat and store a set volume of water, regardless of whether someone is using that hot water or not. Because our tankless water heaters only activate when hot water is being used, no standby energy losses are incurred, providing efficient heating while conserving energy.

COMPACT SIZE

On top of all this, an A. O. Smith tankless water heater takes up much less space than your conventional tank-type water heater or boiler. A. O. Smith's wall-mount design offers flexible installations freeing up valuable storage space.

SAFETY

At A. O. Smith, we place the safety and reliability of our products above all else. By incorporating technologically advanced safety features into every model, we provide the assurance and peace of mind that can only come from an A. O. Smith quality product.

Air-Fuel Ratio (AFR) Sensor

A. O. Smith's unique AFR sensor monitors and maintains proper combustion at all times. Together with the onboard computer, this system will adjust the fan motor speed to ensure that air and fuel have a proper mixture ratio, minimizing emissions and maximizing efficiency.

Additional Safety Features

Freeze Protection:

Every heater in A. O. Smith's tankless lineup has an internal freeze protection system, which is rated to protect the heaters when installed in sub-freezing conditions. This system works to keep water temperatures within the heat exchanger from falling below a certain level, preventing freeze damage.

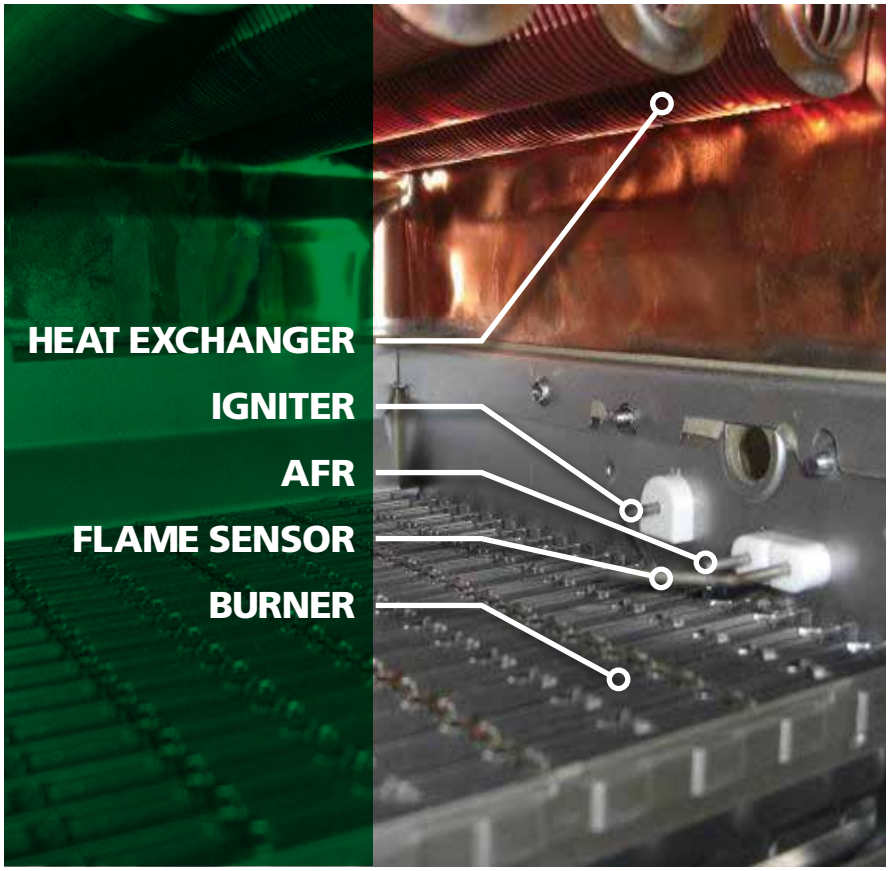

Hi-Limit Switch:

Ensures that water temperatures do not exceed safe levels. Before the water temperature can even reach these unsafe levels, the hi-limit switch activates by disengaging the gas valves, effectively shutting down the water heater.

PVC Venting:

Indoor condensing models have a thermistor and hi-limit switch that monitor the exhaust temperature. If the exhaust temperature nears an unsafe limit, these features regulate combustion and can shut the heater down to protect the integrity of the PVC vent material.

Overheat Cutoff Fuse:

Ensures that there are no breaches in the heat exchanger drum. In cases where enough physical damage might have been done to the water heater to lead to a breach in the heat exchanger drum, the overheat cutoff fuse reacts by shutting down the water heater if the surface of the heat exchanger retains too much heat.

DURABILITY
HEAT EXCHANGER WITH COMMERCIAL-GRADE COPPER

Only A. O. Smith incorporates true commercial-grade heat exchangers in our tankless heaters (510, 510C, 510U, 540H, 540P, CT-199 and 910 non-ASME models). All aspects of the heat exchanger are designed to add the durability and reliability that is vital to any successful commercial organization or business.

Commercial-Grade Copper Alloy

Our commercial-grade copper is a heat-resistant copper alloy, with additive elements that make it much stronger and harder than the standard C1220 copper used in most other heat exchangers. Our commercial-grade copper has 8 times the tensile strength of regular copper. Even at high temperatures, our commercial-grade copper maintains a fine grain and high strength. Commercial-grade copper provides resistance to the damaging effects of erosion that can cause heat exchangers to leak.

Commercial-Grade Copper Tubing

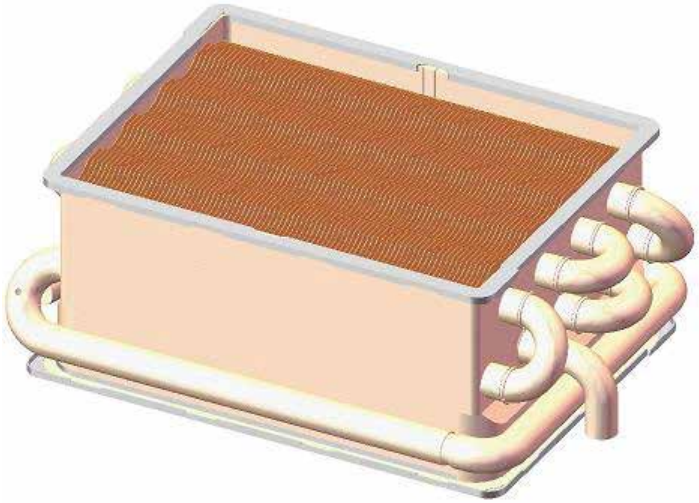

Drum Thickness

During every ignition cycle, thermal expansion causes all heat exchangers to undergo heat stress. After the thousands of ON/OFF cycles typically seen in a commercial application, this heat stress can prove damaging. This is why the heat exchangers in our commercial and light commercial products utilize drums that are 25% thicker, ensuring the longevity of our products. A thicker drum creates less strain on the heat exchanger.

A thinner drum strains more under heat stress

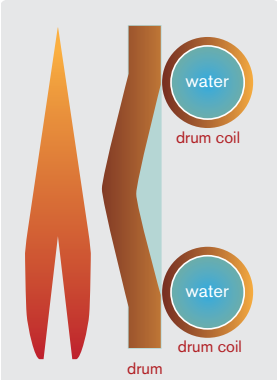

A thicker drum creates less strain on the heat exchanger

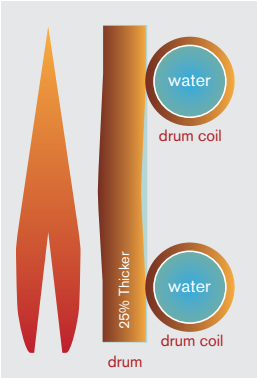

WATER VALVES

Making true commercial-grade water heaters involves more than just redesigning our heat exchangers—every internal component has to measure up to A. O. Smith's commercial standards. Just like our advanced heat exchangers, the longevity and functionality of components such as our water valves and flow sensors are also of great importance.

Our commercial-grade water heaters (510 and 540), as well as our commercial water heaters (CT-199 and 910) feature a bypass and flow adjustment valve, which not only provide the optimal control and precision essential for commercial usage, but also offer the durability needed to handle tough, high-volume conditions.

Stepper Motor Water Valves - 910 Models

Bypass Valve - 510/U/C,
CT-199 and 540H Models

Flow Adjustment - 510/U/C,
CT-199 and 540H Models

SECONDARY HEAT EXCHANGER 316L STAINLESS STEEL (CONDENSING MODELS ONLY)

The secondary condensing heat exchanger is made of high-quality 316L stainless steel. This is where the rest of the heat transfer occurs. Due to the lower temperature acidic condensation occurs, and stainless steel is required in order to avoid corrosion.

For condensing heat exchangers, it is more suitable to use 316L stainless steel because of the extreme environment (heat, acidic condensation, chloride) that the material is subjected to.

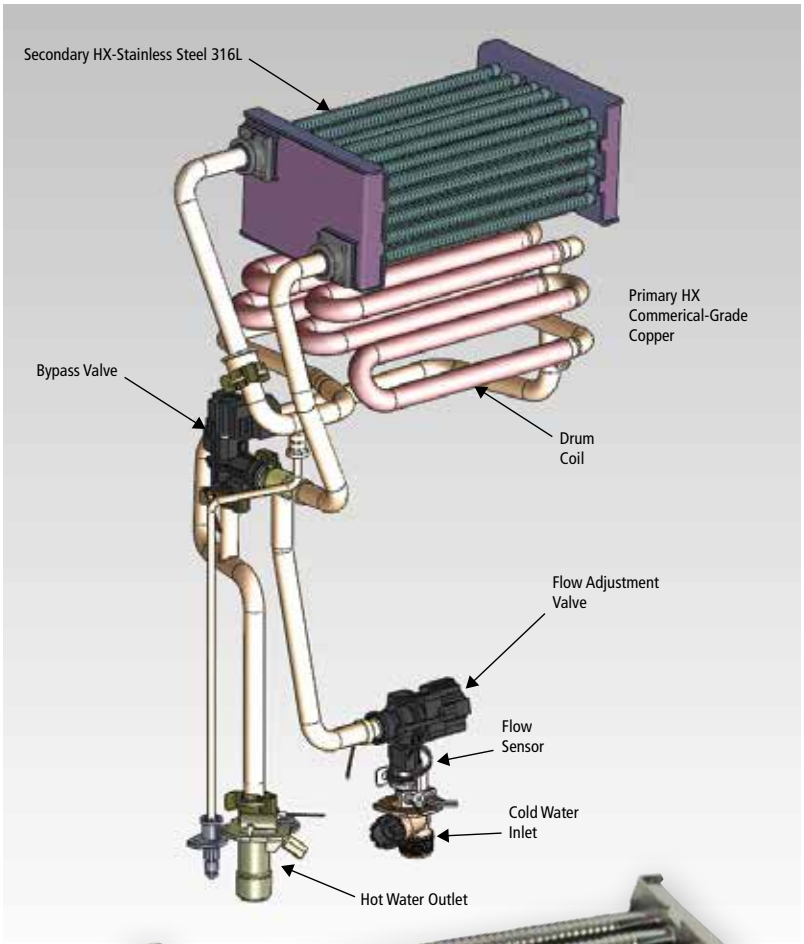

PRIMARY HEAT EXCHANGER: COPPER VS. STAINLESS STEEL

- Heat transfers 25 times more readily through copper than stainless steel. Consequently, for the same amount of heat transfer, stainless steel heat exchangers need to be larger than copper heat exchangers, leading to a larger pressure loss.
- At higher temperatures, it is the nature of stainless steel to become prone to a number of problems not usually experienced at room temperature. It is vulnerable to pitting corrosion and stress corrosion cracking (SCC).
    - Stainless steel is NOT better for durability because it is harder. Hardness causes the material to become brittle. Stainless steel will crack after numerous cycles of thermal expansion/contraction, especially with chloride in the water. Copper heat exchangers are less brittle and better suited for expansion/contraction without cracking.
    - In a *dual* heat exchanger design, corrosion is not a big concern in the non-condensing primary heat exchanger because no condensation forms on the exterior of the pipes. Stainless steel is unnecessary for this stage.

Note: 140H, 240H, and 340H condensing line units use C1220 copper and do not have a bypass valve
* Diagram represents 540H

WATER FLOW

Condensation can build up over time in any heat exchanger, causing damage and premature leaks. A. O. Smith's commercial models (910 series) include condensation reduction features that safeguard against these types of damaging effects.

Better Water Pathway Design

By redesigning and redirecting the flow of water, the temperature of the heat exchanger drum and finned coils stay elevated above dew point, making it much more difficult for condensation to build.

Fin Pitch

By widening the pitch of the heat exchanger fins, not only do we improve durability by reducing occurrences of blockage, we also maintain higher temperatures on the upper finned coils. Keeping these coils at elevated temperatures reduces the likelihood of condensation buildup.

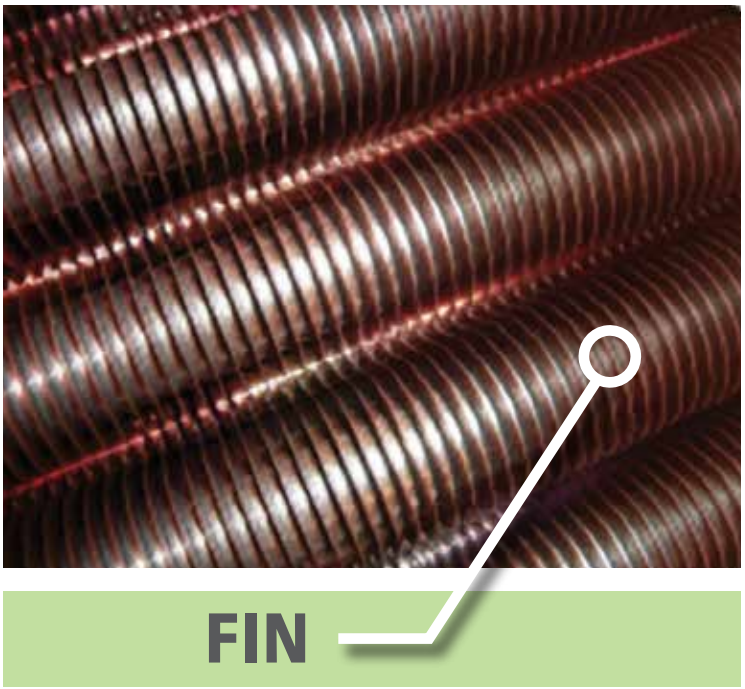

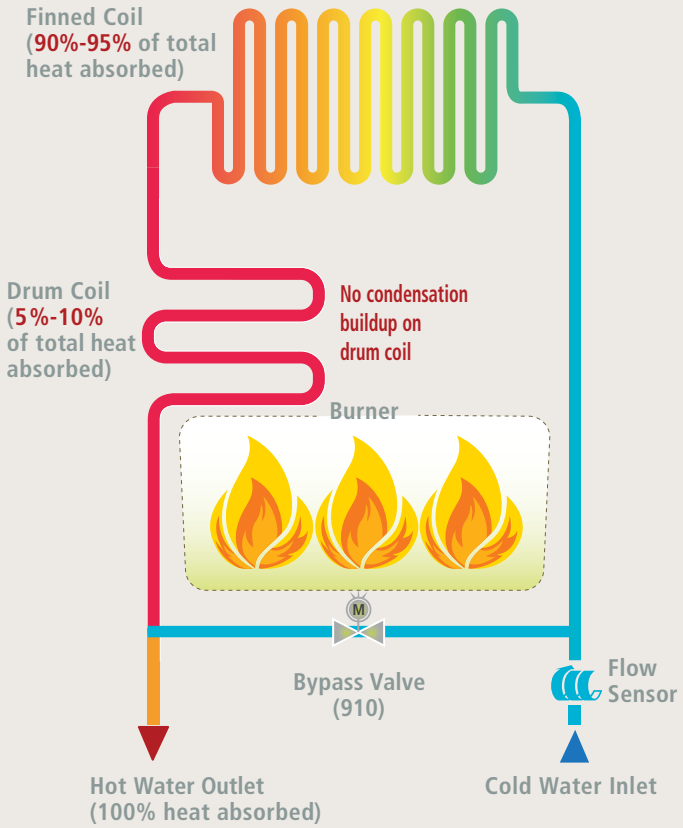

BASIC SIZING GUIDELINES

The flow rate capacity of tankless water heaters depends on the temperature difference between the desired output and incoming water temperature. The flow rate comparison chart and table shown here summarize the flow rate charts found in the specifications of each model.

A. O. Smith water heaters are sized according to the peak flow rate requirements, worst-case temperature-rise scenarios, and types of applications. Once these factors have been determined, refer to either the flow rate comparison here or the flow rate charts found in each model's specifications. Select the appropriate water heater as well as the amount of water heaters required.

Application designers/engineers can decide whether to size for full flow, expected flow, or utilize probability models such as the modified "Hunter Curve." For large scale applications such as hotels, apartment complexes and large restaurants, Hunter Curves are commonly used to estimate the peak flow rate demand when given the total amount of fixture units within an application. It is up to the application designer/engineer to determine the amount of fixture units within any given application.

MATCH THE UNIT TO YOUR NEEDS

Capacity - Number of Shower Heads (Assuming the set point temperature is 120˚F)

	Warmer Climates 70°F Incoming Groundwater Temperature	Cooler Climates 50°F Incoming Groundwater Temperature
Non-Condensing Units		
110/U/C	2.5 Showers	1.5 Showers
310/U/C	3.5 Showers	2.5 Showers
510/U/C	3.5 Showers	2.5 Showers
Condensing Units		
140H	2.5 Showers	1.5 Showers
240H	3.5 Showers	2.5 Showers
340H	4 Showers	2.5 Showers
540H/P	4.5 Showers	3 Showers
Commercial Units		
910	7 Showers	5 Showers
CT-199	4.5 Showers	3 Showers

FLOW RATE GUIDE

Temperature Rise vs. Gallons per Minute

Temp Rise	110/U/C	310/U/C	510/U/C	140H	240H	340H	540H/P	CT-199	910
30°	6.6	8.0	10.0	6.6	6.6	8.0	10.0	10.0	14.5
35°	6.6	8.0	9.3	6.4	6.6	8.0	10.0	10.0	14.5
40°	5.7	7.8	8.1	5.6	6.6	8.0	9.5	9.5	14.5
45°	5.1	6.9	7.2	5.0	6.6	7.6	8.4	8.4	13.5
50°	4.6	6.2	6.5	4.5	6.1	6.8	7.6	7.6	12.2
55°	4.2	5.7	5.9	4.1	5.5	6.2	6.9	6.9	11.1
60°	3.8	5.2	5.4	3.7	5.1	5.7	6.3	6.3	10.1
65°	3.5	4.8	5.0	3.4	4.7	5.3	5.8	5.8	9.4
70°	3.3	4.4	4.7	3.2	4.3	4.9	5.4	5.4	8.7
75°	3.1	4.1	4.3	3.0	4.1	4.6	5.0	5.0	8.1
80°	2.9	3.9	4.1	2.8	3.8	4.3	4.7	4.7	7.6
85°	2.7	3.7	3.8	2.6	3.6	4.0	4.4	4.4	7.2
90°	2.5	3.5	3.6	2.5	3.4	3.8	4.2	4.2	6.8
95°	2.4	3.3	3.4	2.3	3.2	3.6	4.0	4.0	6.4
100°	2.3	3.1	3.3	2.2	3.0	3.4	3.8	3.8	6.1

Flow rate is determined by temperature rise. To determine your temperature rise, subtract the incoming water temperature from the set output temperature. All units are factory set to 120°F or 122°F but can be changed.

Example of Hunter Curves for Sizing Large Applications

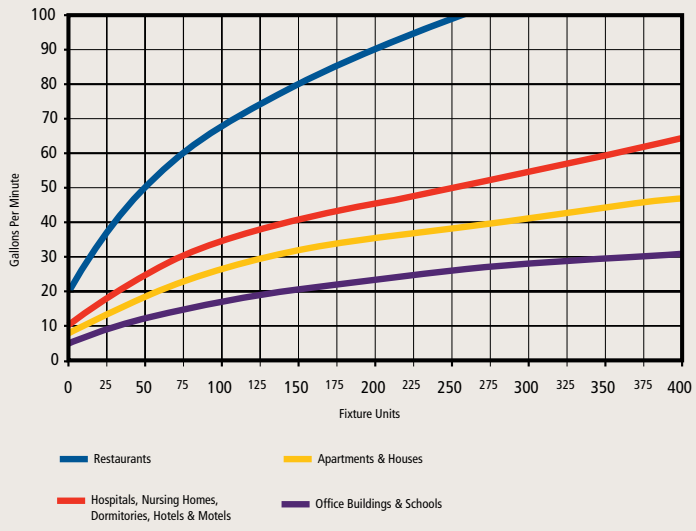

Comparison of Flow Rates vs. Temperature Rise

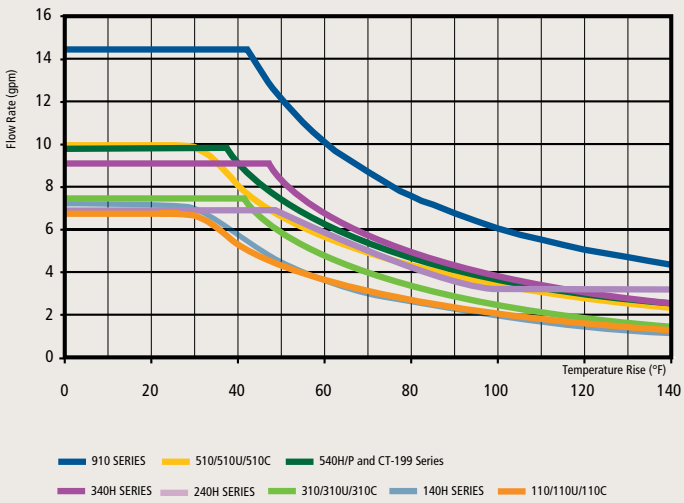

SIMPLE TANKLESS SIZING

TANKLESS MODELS GROUND WATER TEMPERATURE FACTOR

The temperature of incoming ground water (cold water inlet temperature) varies greatly throughout the U.S. and also fluctuates with the changing of the seasons. The temperature of water as it enters the water heater will determine the amount of "temperature rise" required to achieve the desired hot water outlet temperature (120°F is recommended).

The best way to measure incoming ground water temperature is to use a thermometer to measure cold water temperature during the coldest season of the year. To simplify the process, use this map to determine whether your installation location is in the Southern Zone, Central Zone or Northern Zone.

PEAK HOT WATER DEMAND

The next step is to determine how many gallons per minute of hot water will be required during the busiest usage period (peak demand). Consider all appliances and fixtures that use hot water, including lavatory faucets, kitchen faucets, washing machines, dishwashers, showers and bathtubs. Be sure to determine how many appliances and fixtures will be used at the same time (peak demand).

AVERAGE GROUND WATER TEMPERATURE

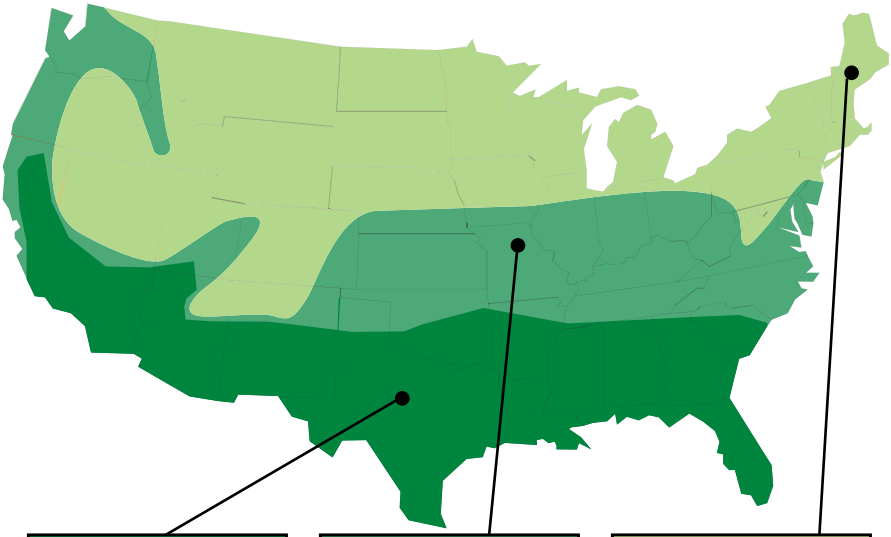

SOUTHERN ZONE	CENTRAL ZONE	NORTHERN ZONE
Average Ground Water Temperature: 62°F to 77°F	Average Ground Water Temperature: 52°F to 61°F	Average Ground Water Temperature: 37°F to 51°F

Remember, these are general recommendations. Your A. O. Smith Water Heater Specialist can review your family's needs in even greater detail to make sure the model you choose will always provide enough hot water to meet the demand.

110 SERIES

The 110 Series is great for apartments, one bath homes in cold climates, condos and summer cabins. A remote control is included as a standard feature.

ATO-110-N

ATI-110-N

Specifications

Model Number*	Type	Gas Consumption Input		Inlet Gas Pressure**		UEF
		Minimum (BTU/H)	Maximum (BTU/H)	Minimum (in. W.C.)	Maximum (in. W.C.)	
ATI-110-N	Natural	19,500	140,000	4.0	10.5	0.79
ATO-110-N	Natural	19,500	140,000	4.0	10.5	0.79

Model Number*	Maximum GPM	Hot/Cold Connections	Gas Connection	Clearances (in.)				Approx Shipping Weight (lbs)
				Top	Bottom	Side	Front	
ATI-110-N	6.6	3/4" NPT	3/4" NPT	12	12	3	4	38
ATO-110-N	6.6	3/4" NPT	3/4" NPT	36	12	3	24	38

*For propane models, change "N" to "P"
**For propane models, minimum inlet gas pressure is 8.0 in. W.C. and maximum inlet gas pressure is 14.0 in. W.C.

110 Temperature Settings	Dipswitches	113°F 122°F (default) 131°F 140°F		
	With 100112183 remote (max. distance 150' from heater, non-polarized 20 gauge wiring.)			
	99°F to 167°F (16 options), 122°F Default Factory Setting			
Electric	120 V	73 W / 0.61 A (Operation)	6 W / 0.05 A (Standby)	111 W / 0.93 A (Freeze-Protection)

AHRI CERTIFIED® www.ahridirectory.org

DESIGN CERTIFIED

LOW-LEAD IAPMO R&T

ANSI Z21.10.3 • CSA 4.3

Specifications

Indoor and Outdoor Installation Options

Power Vent or Power Direct Vent Design

Low NOx Emissions

4" Category III Vent

Flow Rate up to 6.6 GPM

- Values based on factory testing. 0.4 GPM required for continuous fire after initial ignition

Water Pressure: 15-150 psi

- Pressure Only Relief Valve Requires (Min 140,000 btu/h, 150 psi).
- 40 psi or above recommended for max. flow

Warranty

- 15-year limited warranty on heat exchanger in residential applications.
- 5-year limited warranty on heat exchanger in commercial applications.
- 5-year warranty on all parts.
- Refer to hotwater.com for further warranty details

Dimensions

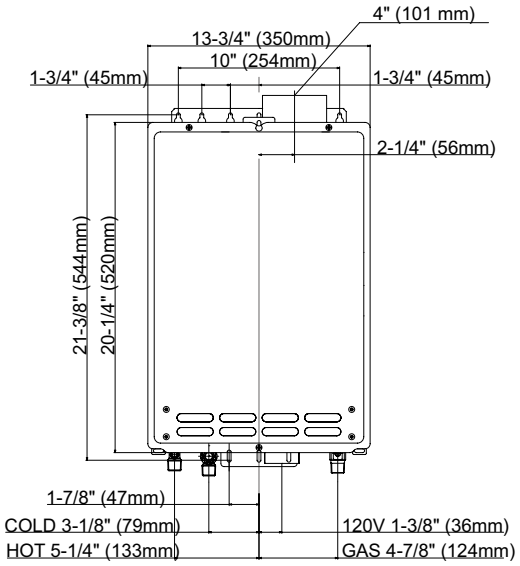

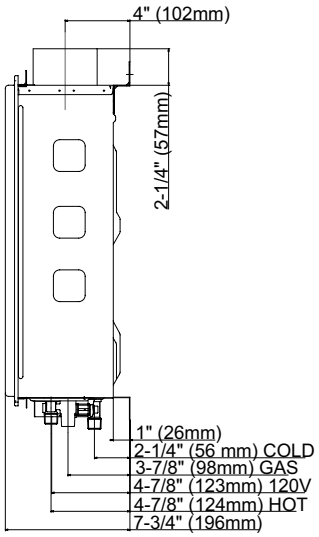

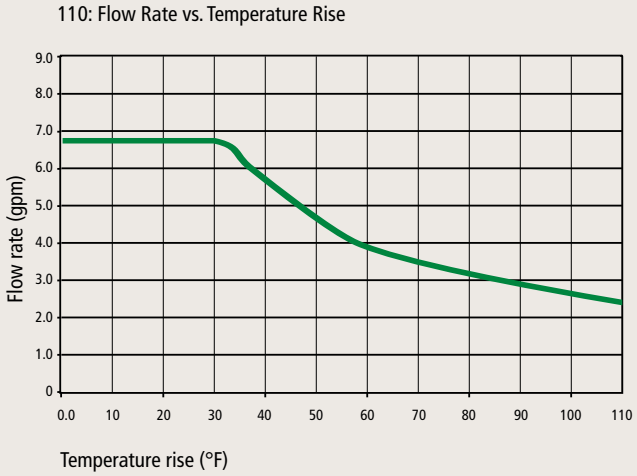

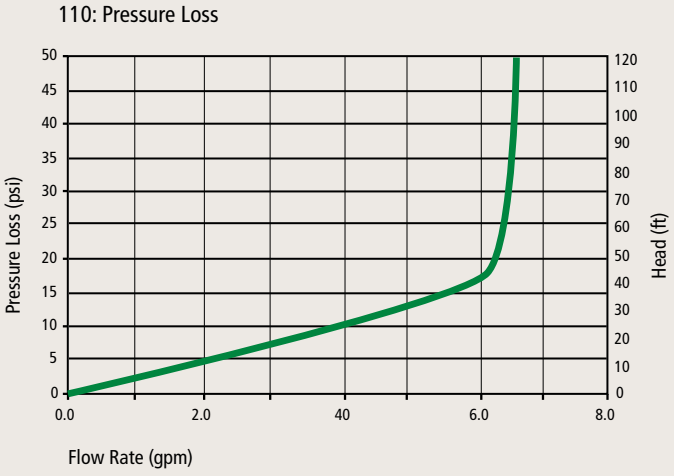

NON-CONDENSING

310 SERIES

The 310 features a max flow rate of 8.0 gpm, providing enough hot water for a home with up to three showers at the same time. A remote control is included as a standard feature.

ATO-310-N ATI-310-N

Specifications

Model Number*	Type	Gas Consumption Input		Inlet Gas Pressure**		UEF
		Minimum (BTU/H)	Maximum (BTU/H)	Minimum (in. W.C.)	Maximum (in. W.C.)	
ATI-310-N	Natural	11,000	190,000	4.0	10.5	0.80
ATO-310-N	Natural	11,000	190,000	4.0	10.5	0.80

Model Number*	Maximum GPM	Hot/Cold Connections	Gas Connection	Clearances (in.)				Approx Shipping Weight (lbs)
				Top	Bottom	Side	Front	
ATI-310-N	8	3/4" NPT	3/4" NPT	12	12	3	4	43
ATO-310-N	8	3/4" NPT	3/4" NPT	36	12	3	24	43

*For propane models, change "N" to "P"
**For propane models, minimum inlet gas pressure is 8.0 in. W.C. and maximum inlet gas pressure is 14.0 in. W.C.

310 Temperature Settings	Dipswitches	113°F 122°F (default) 131°F 140°F		
	With 100112183 remote (max. distance 150' from heater, non-polarized 20 gauge wiring.)			
	99°F to 167°F (16 options), 122°F Default Factory Setting			
Electric	120 V	88 W / 0.73 A (Operation)	6 W / 0.05 A (Standby)	111 W / 0.93 A (Freeze-Protection)

AHRI CERTIFIED® www.ahridirectory.org

DESIGN CERTIFIED

LOW-LEAD IAPMO R&T

ANSI Z21.10.3 • CSA 4.3

Specifications

Indoor and Outdoor Installation Options

Power Vent or Power Direct Vent Design

Low NOx Emissions

4" Category III Vent

Flow Rate up to 8.0 GPM

- Values based on factory testing. 0.4 GPM required for continuous fire after initial ignition

Water Pressure: 15-150 psi

- Pressure Only Relief Valve Requires (Min 190,000 btu/h, 150 psi).
- 40 psi or above recommended for max. flow

Warranty

- 15-year limited warranty on heat exchanger in residential applications.
- 5-year limited warranty on heat exchanger in commercial applications.
- 5-year warranty on all parts.
- Refer to hotwater.com for further warranty details

Dimensions

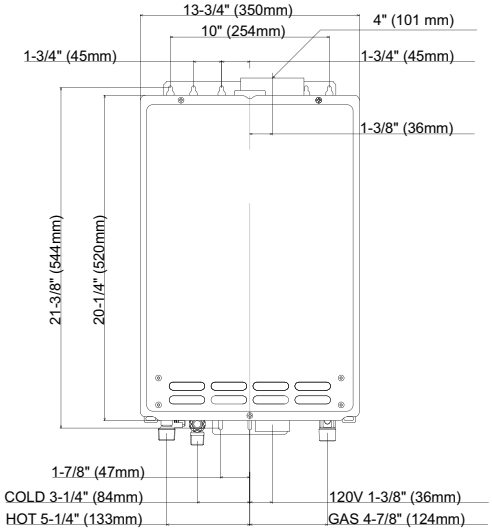

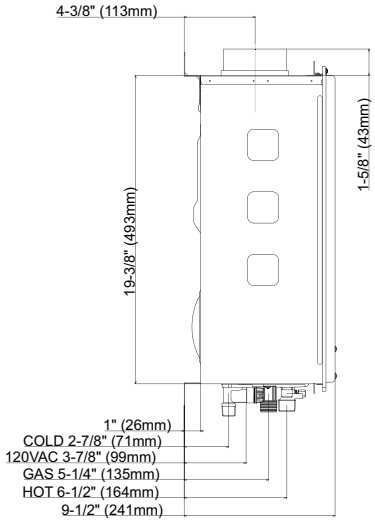

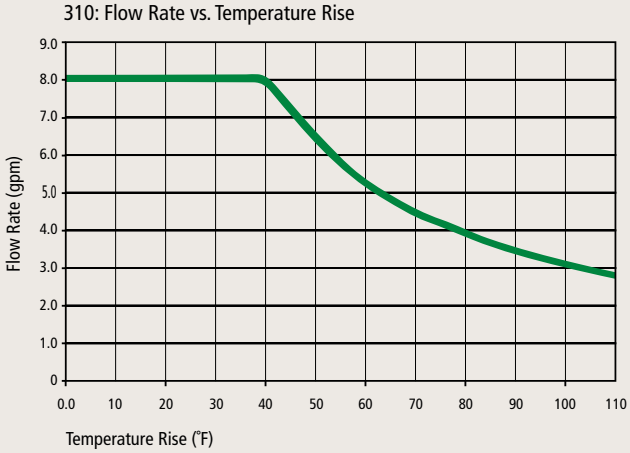

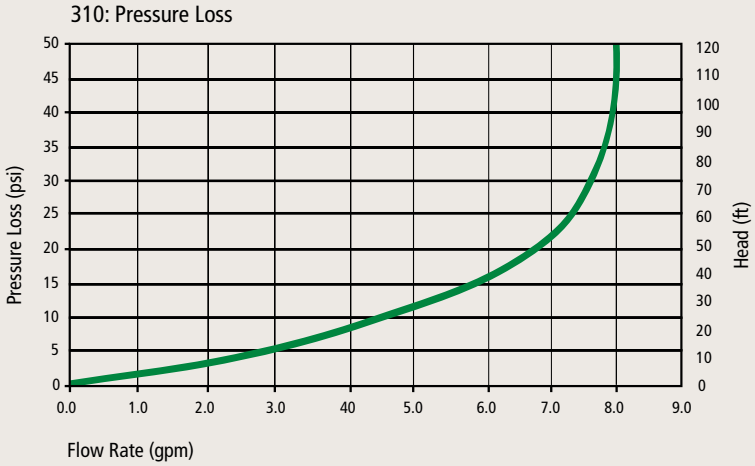

NON-CONDENSING

510 SERIES

The 510 series is well suited for residential/commercial applications such as small restaurants and beauty salons. Utilizing commercial grade copper alloy for the heat exchanger tubing, the 510 series is also suitable for heavier residential usages such as combination space heating and domestic recirculation systems. A remote control is included as a standard feature.

ATO-510-N

ATI-510-N

Specifications

Model Number*	Type	Gas Consumption Input		Inlet Gas Pressure**		UEF
		Minimum (BTU/H)	Maximum (BTU/H)	Minimum (in. W.C.)	Maximum (in. W.C.)	
ATI-510-N	Natural	11,000	199,000	4.0	10.5	0.80
ATO-510-N	Natural	11,000	199,000	4.0	10.5	0.80

Model Number*	Maximum GPM	Hot/Cold Connections	Gas Connection	Clearances (in.)				Approx Shipping Weight (lbs)
				Top	Bottom	Side	Front	
ATI-510-N	10	3/4" NPT	3/4" NPT	12	12	3	4	45
ATO-510-N	10	3/4" NPT	3/4" NPT	36	12	3	24	45

*For propane models, change "N" to "P"
**For propane models, minimum inlet gas pressure is 8.0 in. W.C. and maximum inlet gas pressure is 14.0 in. W.C.

510 Temperature Settings	Dipswitches	104°F 113°F 122°F (default) 140°F		
	With 100112155 remote (max. distance 400' from heater, non-polarized 20 gauge wiring.)			
	100°F to 176°F (15 options), 122°F Default Factory Setting			
Electric	120 V	90 W / 0.75 A	6 W / 0.05 A	111 W / 0.93 A (Freeze-Protection)

AHRI CERTIFIED® www.ahridirectory.org

NSF

DESIGN CERTIFIED

LOW-LEAD IAPMO R&T

ANSI Z21.10.3 • CSA 4.3

Specifications

Indoor and Outdoor Installation Options

Power Vent or Power Direct Vent Design

Low NOx Emissions

4" Category III Vent

Flow Rate up to 10.0 GPM

- Values based on factory testing. 0.4 GPM required for continuous fire after initial ignition

Water Pressure: 15-150 psi

- Pressure Only Relief Valve Requires (Min 199,000 btu/h, 150 psi).
- 40 psi or above recommended for max. flow

Easy-Link up to 4 heaters

Warranty

- 15-year limited warranty on heat exchanger in residential applications.
- 5-year limited warranty on heat exchanger in commercial applications.
- 5-year warranty on all parts.
- Refer to hotwater.com for further warranty details

Dimensions

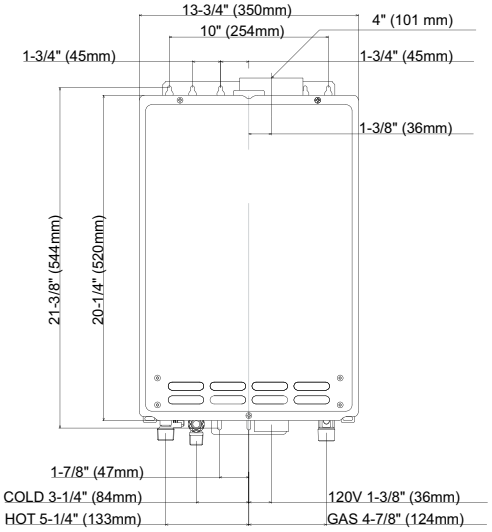

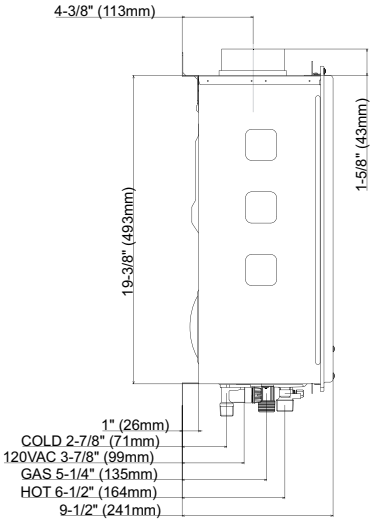

510: Flow Rate vs. Temperature Rise

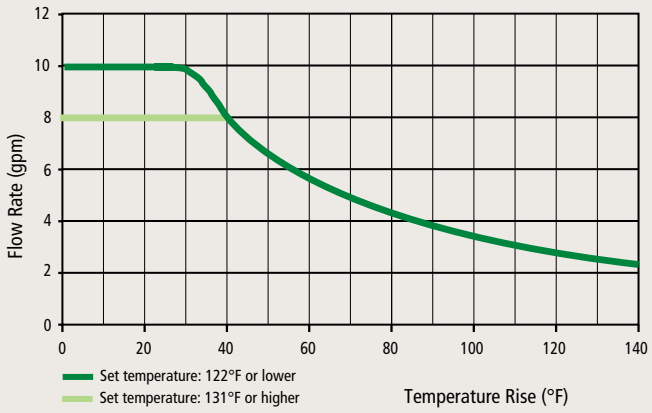

510: Pressure Loss

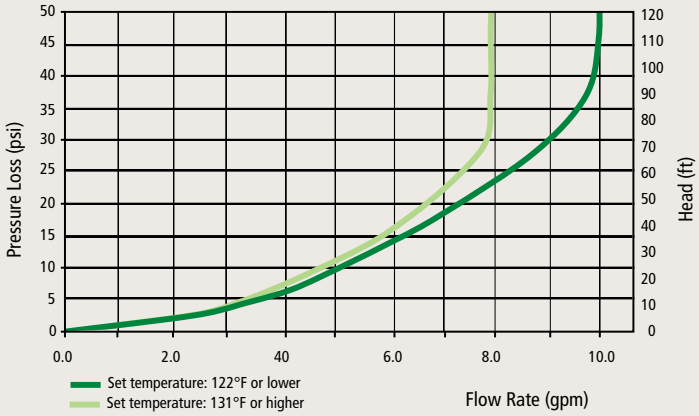

NON-CONDENSING

110C SERIES

The 110C Simplicity Series is fuel convertible out of the box and easily installs using contractor preferred concentric venting. Great for apartments, one bath homes in cold climates, condos and summer cabins.

ATI-110C-N

Specifications

Model Number*	Type	Gas Consumption Input		Inlet Gas Pressure**		UEF
		Minimum (BTU/H)	Maximum (BTU/H)	Minimum (in. W.C.)	Maximum (in. W.C.)	
ATI-110C-N	Natural	15,000	140,000	4.0	10.5	0.81

Model Number*	Maximum GPM	Hot/Cold Connections	Gas Connection	Clearances (in.)				Approx Shipping Weight (lbs)
				Top	Bottom	Side	Front	
ATI-110C-N	6.6	3/4" NPT	3/4" NPT	12	12	3	4	55

*Indoor models only. Units are field convertible from natural gas to propane with supplied conversion kit.
**For propane, minimum inlet gas pressure is 8.0 in. W.C. and maximum inlet gas pressure is 14.0 in. W.C.

110C Temperature Settings	Dipswitches	120 °F (default) 140°F		
	With 100209924 remote (max. distance 400' from heater, non-polarized 20 gauge wiring.)			
	100 °F to 140 °F (9 options), 120 °F Default Factory Setting			
Electric	120 V	53 W / 0.58 A (Operation)	2 W / 0.06 A (Standby)	99 W / 0.83 A (Freeze-Protection)

AHRI CERTIFIED® www.ahridirectory.org

Meets: SCAQMD Rule 1146.2 California and Texas

DESIGN CERTIFIED

LOW-LEAD IAPMO R&T

ANSI Z21.10.3 • CSA 4.3

Specifications

Installations are simple and flexible with contractor-preferred concentric venting

Long venting runs up to 43 feet and operates in altitudes up to 10,100 feet

Gas convertible from natural gas to propane using the included conversion kit

Flow Rate up to 6.6 GPM

- Values based on factory testing. 0.4 GPM required for continuous fire after initial ignition

Meets Ultra-Low NOx requirements

Water Pressure: 15-150 psi

- Pressure Only Relief Valve Requires (Min 140,000 btu/h, 150 psi)
- 40 psi or above recommended for max. flow

Warranty

- 15-year limited warranty on heat exchanger in residential applications.
- 5-year limited warranty on heat exchanger in commercial applications.
- 5-year warranty on all parts.
- Refer to hotwater.com for further warranty details

Dimensions

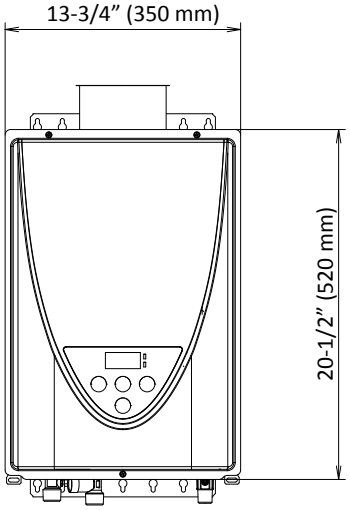

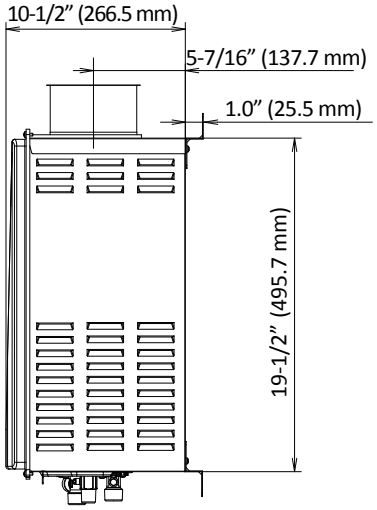

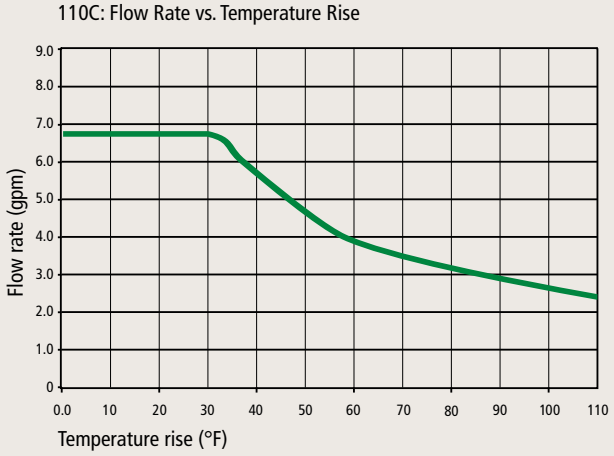

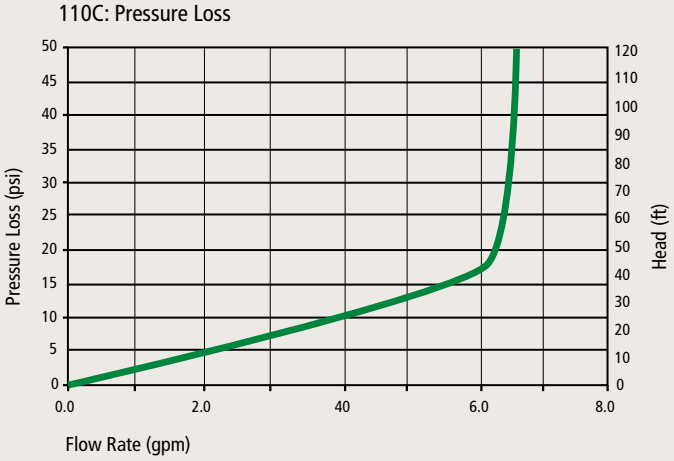

NON-CONDENSING

310C SERIES

The 310C Simplicity Series is fuel convertible out of the box and easily installs using contractor preferred concentric venting. It generates a max flow rate of 8.0 gpm, providing enough hot water to run three showers at the same time.

ATI-310C-N

Specifications

Model Number*	Type	Gas Consumption Input		Inlet Gas Pressure**		UEF
		Minimum (BTU/H)	Maximum (BTU/H)	Minimum (in. W.C.)	Maximum (in. W.C.)	
ATI-310C-N	Natural	15,000	190,000	4.0	10.5	0.82

Model Number*	Maximum GPM	Hot/Cold Connections	Gas Connection	Clearances (in.)				Approx Shipping Weight (lbs)
				Top	Bottom	Side	Front	
ATI-310C-N	8	3/4" NPT	3/4" NPT	12	12	3	4	55

*Indoor models only. Units are field convertible from natural gas to propane with supplied conversion kit.
**For propane, minimum inlet gas pressure is 8.0 in. W.C. and maximum inlet gas pressure is 14.0 in. W.C.

310C Temperature Settings	Dipswitches	120°F (default) 140°F		
	With 100209924 remote (max. distance 400' from heater, non-polarized 20 gauge wiring.)			
	100 °F to 140 °F (9 options), 120°F Default Factory Setting			
Electric	120 V	71 W / 0.81 A (Operation)	2 W / 0.06 A (Standby)	99 W / 0.83 A (Freeze-Protection)

AHRI CERTIFIED® www.ahridirectory.org

Meets: SCAQMD Rule 1146.2 California and Texas

DESIGN CERTIFIED

LOW-LEAD IAPMO R&T

ANSI Z21.10.3 • CSA 4.3

Specifications

Installations are simple and flexible with contractor-preferred concentric venting

Long venting runs up to 43 feet and operates in altitudes up to 10,100 feet

Gas convertible from natural gas to propane using the included conversion kit

Flow Rate up to 8.0 GPM

- Values based on factory testing. 0.4 GPM required for continuous fire after initial ignition.

Meets Ultra-Low NOx requirements

Water Pressure: 15-150 psi

- Pressure Only Relief Valve Requires (Min 190,000 btu/h, 150 psi)
- 40 psi or above recommended for max. flow

Warranty

- 15-year limited warranty on heat exchanger in residential applications.
- 5-year limited warranty on heat exchanger in commercial applications.
- 5-year warranty on all parts.
- Refer to hotwater.com for further warranty details

Dimensions

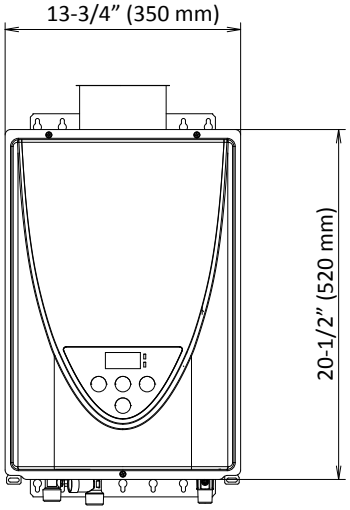

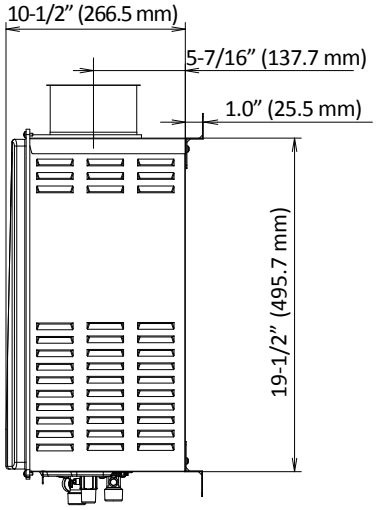

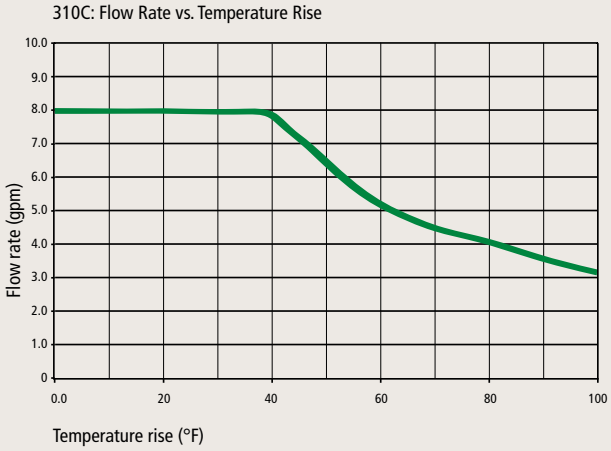

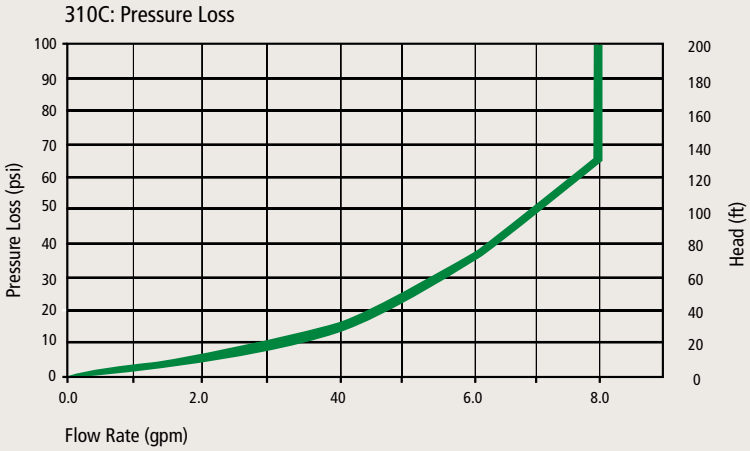

NON-CONDENSING

510C SERIES

The 510C Simplicity Series is fuel convertible out of the box and easily installs using contractor preferred concentric venting. It is well suited for residential/commercial applications such as small restaurants and beauty salons. Utilizing commercial grade copper alloy for the heat exchanger tubing, the 510C series is also suitable for heavier residential usages such as combination space heating and domestic recirculation systems.

ATI-510C-N

Specifications

Model Number*	Type	Gas Consumption Input		Inlet Gas Pressure**		UEF
		Minimum (BTU/H)	Maximum (BTU/H)	Minimum (in. W.C.)	Maximum (in. W.C.)	
ATI-510C-N	Natural	15,000	199,000	4.0	10.5	0.81

Model Number*	Maximum GPM	Hot/Cold Connections	Gas Connection	Clearances (in.)				Approx Shipping Weight (lbs)
				Top	Bottom	Side	Front	
ATI-510C-N	10	3/4" NPT	3/4" NPT	12	12	3	4	55

*Indoor models only. Units are field convertible from natural gas to propane with supplied conversion kit.
**For propane, minimum inlet gas pressure is 8.0 in. W.C. and maximum inlet gas pressure is 14.0 in. W.C.

510C Temperature Settings	Dipswitches	120°F (default) 140°F		
	With 100209924 remote (max. distance 400' from heater, non-polarized 20 gauge wiring.)			
	100°F to 160°F (13 options), 120°F Default Factory Setting			
Electric	120 V	72 W / 0.85 A (Operation)	3 W / 0.07 A (Standby)	100 W / 0.83 A (Freeze-Protection)

AHRI CERTIFIED® www.ahridirectory.org

NSF

Meets: SCAQMD Rule 1146.2 California and Texas

DESIGN CERTIFIED

LOW-LEAD IAPMO R&T

ANSI Z21.10.3 • CSA 4.3

Specifications

Installations are simple and flexible with contractor-preferred concentric venting

Long venting runs up to 43 feet and operates in altitudes up to 10,100 feet

Gas convertible from natural gas to propane using the included conversion kit

Flow Rate up to 10 GPM

- Values based on factory testing. 0.4 GPM required for continuous fire after initial ignition.

Meets Ultra-Low NOx requirements

Water Pressure: 15-150 psi

- Pressure Only Relief Valve Requires (Min 199,000 btu/h, 150 psi)
- 40 psi or above recommended for max. flow

Easy-Link up to 4 heaters or connect up to 20 heaters with a Multi-Unit Controller

Warranty

- 15-year limited warranty on heat exchanger in residential applications.
- 5-year limited warranty on heat exchanger in commercial applications.
- 5-year warranty on all parts.
- Refer to hotwater.com for further warranty details

Dimensions

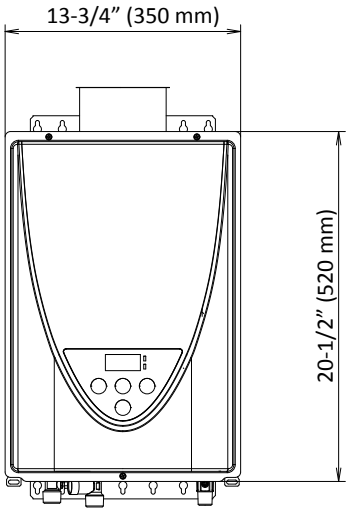

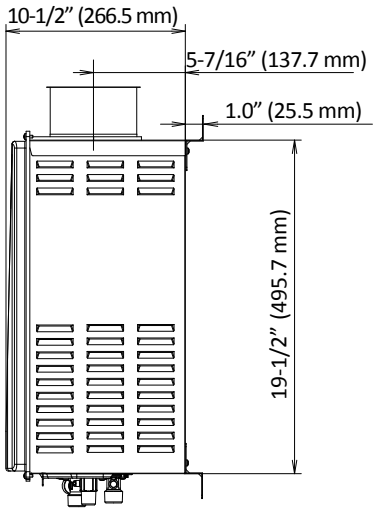

510C: Flow Rate vs. Temperature Rise

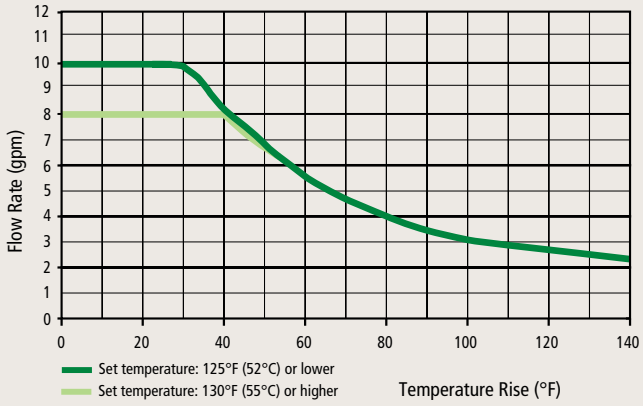

510C: Pressure Loss

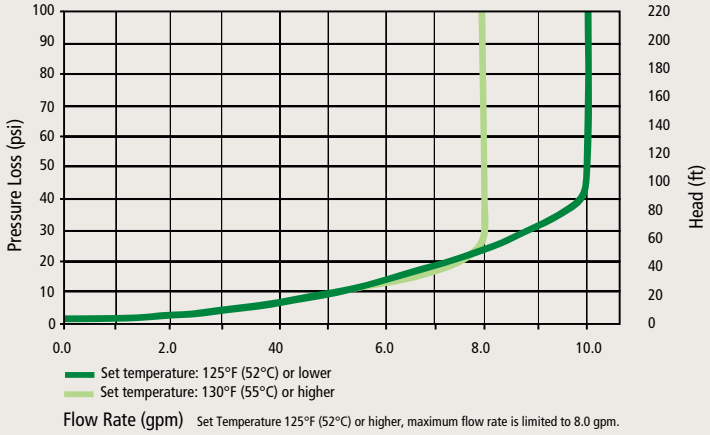

NON-CONDENSING

110U SERIES

The 110U Series is great for apartments, one bath homes in cold climates, condos and summer cabins. Indoor models include an integrated temperature controller. A remote control is included as a standard for outdoor models. Complies with SCAQMD Rule 1146.2 and other air quality management districts with similar NOx Emission requirements of 14 ng/J or 20 PPM.

ATI-110U

ATO-110U

Specifications

Model Number*	Type	Gas Consumption Input		Inlet Gas Pressure**		UEF
		Minimum (BTU/H)	Maximum (BTU/H)	Minimum (in. W.C.)	Maximum (in. W.C.)	
ATI-110U	Natural	15,000	140,000	4.0	10.5	0.81
ATO-110U	Natural	15,000	140,000	4.0	10.5	0.81

Model Number*	Maximum GPM	Hot/Cold Connections	Gas Connection	Clearances (in.)				Approx Shipping Weight (lbs)
				Top	Bottom	Side	Front	
ATI-110U	6.6	3/4" NPT	3/4" NPT	12	12	3	4	39
ATO-110U	6.6	3/4" NPT	3/4" NPT	36	12	3	24	39

*Units are field convertible from natural gas to propane with supplied conversion kit.
**For propane, minimum inlet gas pressure is 8.0 in. W.C. and maximum inlet gas pressure is 14.0 in. W.C.

110U Temperature Settings	Dipswitches	120°F (default) 140°F		
	With 100209924 remote (max. distance 400' from heater, non-polarized 20 gauge wiring.)			
	100°F to 140°F (9 options), 120°F Default Factory Setting			
Electric	120 V	54 W / 0.64 A (Operation)	2 W / 0.06 A (Standby)	96 W / 0.82 A (Freeze-Protection)

AHRI CERTIFIED® www.ahridirectory.org

Meets: SCAQMD Rule 1146.2 California and Texas

DESIGN CERTIFIED

LOW-LEAD IAPMO R&T

ANSI Z21.10.3 • CSA 4.3

Specifications

Indoor and Outdoor Installation Options

Power Vent or Power Direct Vent Design

Ultra-Low NOx Emissions

4" Category III Vent

Gas convertible from natural gas to propane using the included conversion kit

Flow Rate up to 6.6 GPM

- Values based on factory testing. 0.4 GPM required for continuous fire after initial ignition

Water Pressure: 15-150 psi

- Pressure Only Relief Valve Requires (Min 140,000 btu/h, 150 psi).
- 40 psi or above recommended for max. flow

Warranty

- 15-year limited warranty on heat exchanger in residential applications.
- 5-year limited warranty on heat exchanger in commercial applications.
- 5-year warranty on all parts.
- Refer to hotwater.com for further warranty details

Dimensions

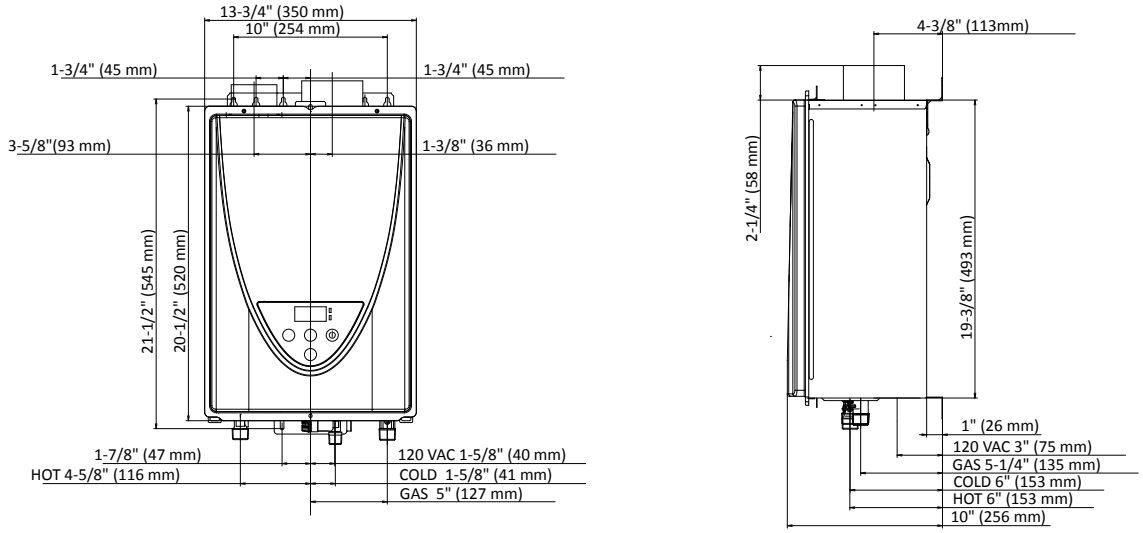

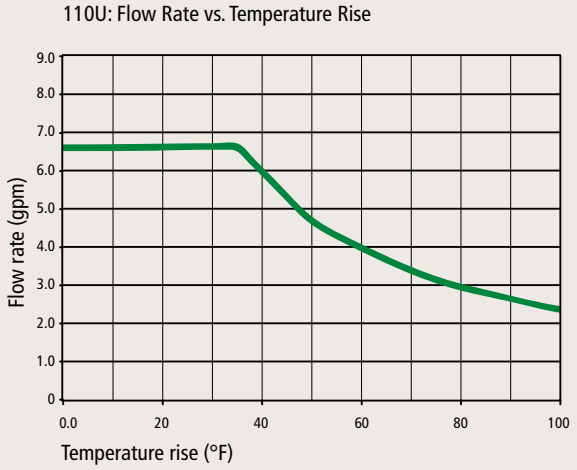

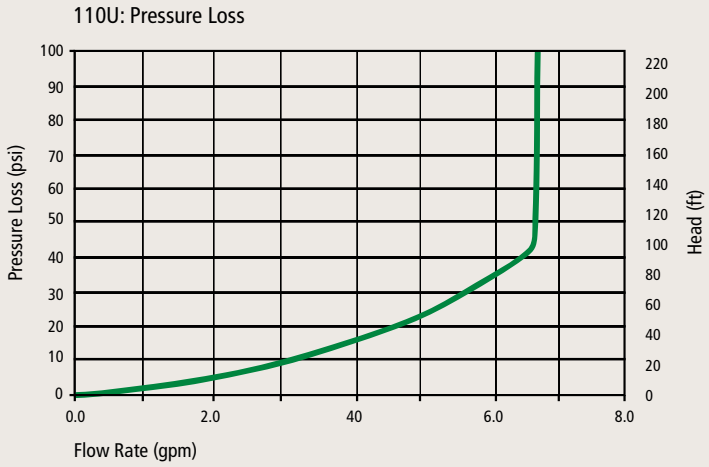

NON-CONDENSING

310U SERIES

The 310U features a max flow rate of 8.0 gpm providing enough hot water to run three showers at the same time. Indoor models include an integrated temperature controller. A remote control is included as a standard for outdoor models. Complies with SCAQMD Rule 1146.2 and other air quality management districts with similar NOx Emission requirements of 14 ng/J or 20 PPM.

ATI-310U

ATO-310U

Specifications

Model Number*	Type	Gas Consumption Input		Inlet Gas Pressure**		UEF
		Minimum (BTU/H)	Maximum (BTU/H)	Minimum (in. W.C.)	Maximum (in. W.C.)	
ATI-310U	Natural	15,000	190,000	4.0	10.5	0.82
ATO-310U	Natural	15,000	190,000	4.0	10.5	0.82

Model Number*	Maximum GPM	Hot/Cold Connections	Gas Connection	Clearances (in.)				Approx Shipping Weight (lbs)
				Top	Bottom	Side	Front	
ATI-310U	8	3/4" NPT	3/4" NPT	12	12	3	4	39
ATO-310U	8	3/4" NPT	3/4" NPT	36	12	3	24	39

*Units are field convertible from natural gas to propane with supplied conversion kit.
**For propane, minimum inlet gas pressure is 8.0 in. W.C. and maximum inlet gas pressure is 14.0 in. W.C.

310U Temperature Settings	Dipswitches	120°F (default) 140°F		
	With 100209924 remote (max. distance 400' from heater, non-polarized 20 gauge wiring.)			
	100°F to 140°F (9 options), 120°F Default Factory Setting			
Electric	120 V	79 W / 0.99 A (Operation)	2 W / 0.06 A (Standby)	96 W / 0.82 A (Freeze-Protection)

AHRI CERTIFIED® www.ahridirectory.org

Meets: SCAQMD Rule 1146.2 California and Texas

DESIGN CERTIFIED

LOW-LEAD IAPMO R&T

ANSI Z21.10.3 • CSA 4.3

Specifications

Indoor and Outdoor Installation Options

Power Vent or Power Direct Vent Design

Ultra-Low NOx Emissions

4″ Category III Vent

Gas convertible from natural gas to propane using the included conversion kit

Flow Rate up to 8 GPM

- Values based on factory testing. 0.4 GPM required for continuous fire after initial ignition

Water Pressure: 15-150 psi

- Pressure Only Relief Valve Requires (Min 190,000 btu/h, 150 psi).
- 40 psi or above recommended for max. flow

Warranty

- 15-year limited warranty on heat exchanger in residential applications.
- 5-year limited warranty on heat exchanger in commercial applications.
- 5-year warranty on all parts.
- Refer to hotwater.com for further warranty details

Dimensions

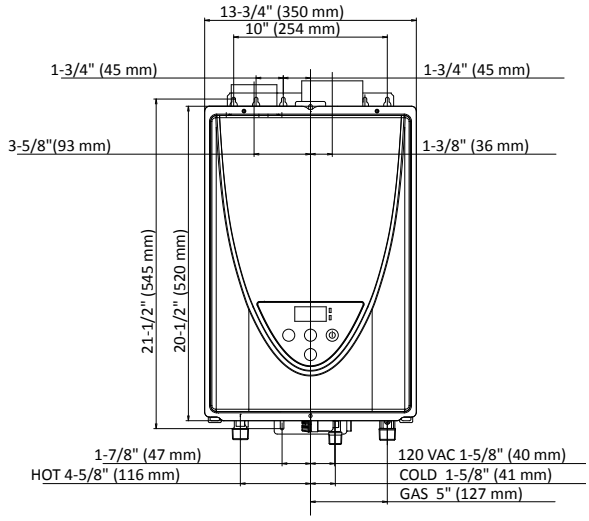

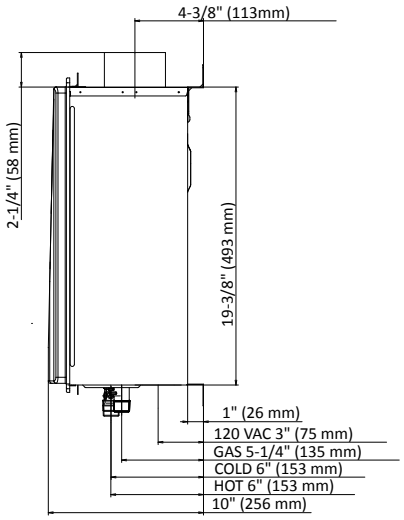

310U: Flow Rate vs. Temperature Rise

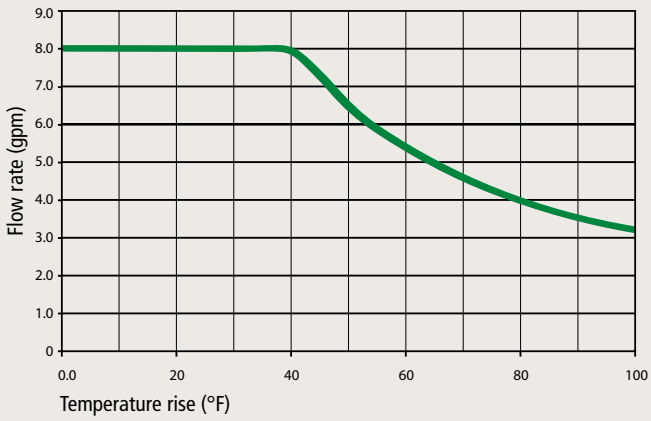

310U: Pressure Loss

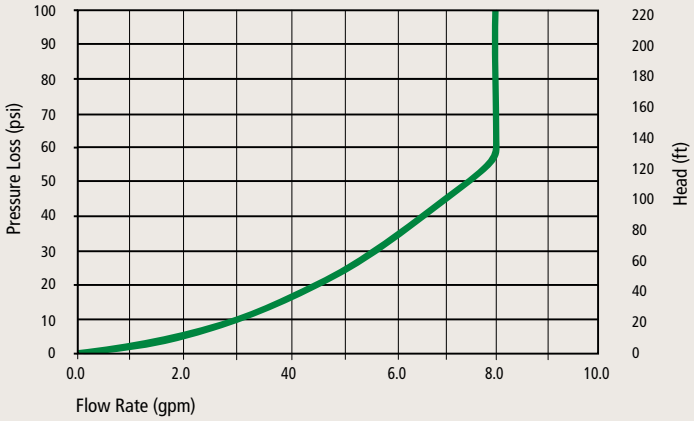

NON-CONDENSING

510U SERIES

The 510U series is well suited for residential/commercial applications such as small restaurants and beauty salons. Indoor models include an integrated temperature controller. A remote control is included as a standard feature for outdoor models. Utilizing commercial-grade copper alloy for the heat exchanger tubing, the 510U series is also suitable for heavier-residential usages such as combination space heating and domestic recirculation systems.

ATI-510U

ATO-510U

Specifications

Model Number*	Type	Gas Consumption Input		Inlet Gas Pressure**		UEF
		Minimum (BTU/H)	Maximum (BTU/H)	Minimum (in. W.C.)	Maximum (in. W.C.)	
ATI-510U	Natural	15,000	199,000	4.0	10.5	0.82
ATO-510U	Natural	15,000	199,000	4.0	10.5	0.81

Model Number*	Maximum GPM	Hot/Cold Connections	Gas Connection	Clearances (in.)				Approx Shipping Weight (lbs)
				Top	Bottom	Side	Front	
ATI-510U	10	3/4" NPT	3/4" NPT	12	12	3	4	40
ATO-510U	10	3/4" NPT	3/4" NPT	36	12	3	24	40

*Units are field convertible from natural gas to propane with supplied conversion kit.
**For propane, minimum inlet gas pressure is 8.0 in. W.C. and maximum inlet gas pressure is 14.0 in. W.C.

510U Temperature Settings	Dipswitches	120°F (default) 140°F		
	With100209924 remote (max. distance 400' from heater, non-polarized 120 gauge wiring.)			
	100°F to 160°F (13 options), 120°F Default Factory Setting			
Electric	120 V	82 W / 1.02 A (Operation)	3 W / 0.07 A (Standby)	97 W / 0.82 A (Freeze-Protection)

AHRI CERTIFIED® www.ahridirectory.org

Meets: SCAQMD Rule 1146.2 California and Texas

NSF

DESIGN GR CERTIFIED®

LOW-LEAD IAPMO R&T

ANSI Z21.10.3 • CSA 4.3

Specifications

Indoor and Outdoor Installation Options

Power Vent or Power Direct Vent Design

Ultra-Low NOx Emissions

4″ Category III Vent

Gas convertible from natural gas to propane using the included conversion kit

Flow Rate up to 10 GPM

- Values based on factory testing. 0.4 GPM required for continuous fire after initial ignition

Easy-Link up to 4 heaters or connect up to 20 heaters with a Multi-Unit Controller

Water Pressure: 15-150 psi

- Pressure Only Relief Valve Requires (Min 190,000 btu/h, 150 psi).
- 40 psi or above recommended for max. flow

Warranty

- 15-year limited warranty on heat exchanger in residential applications.
- 5-year limited warranty on heat exchanger in commercial applications.
- 5-year warranty on all parts.
- Refer to hotwater.com for further warranty details

Dimensions

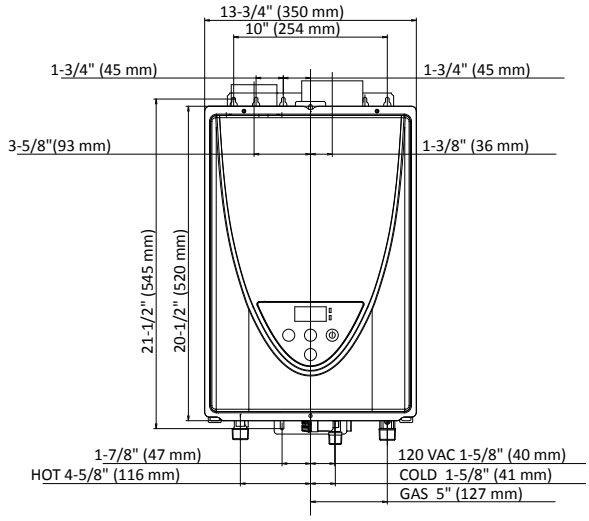

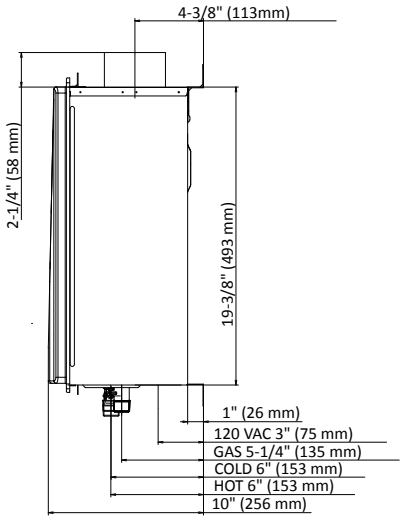

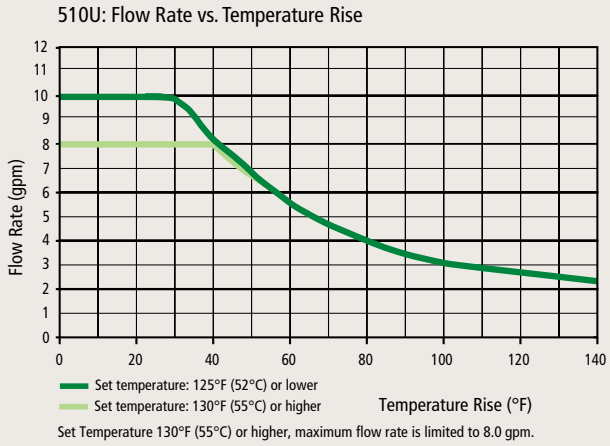

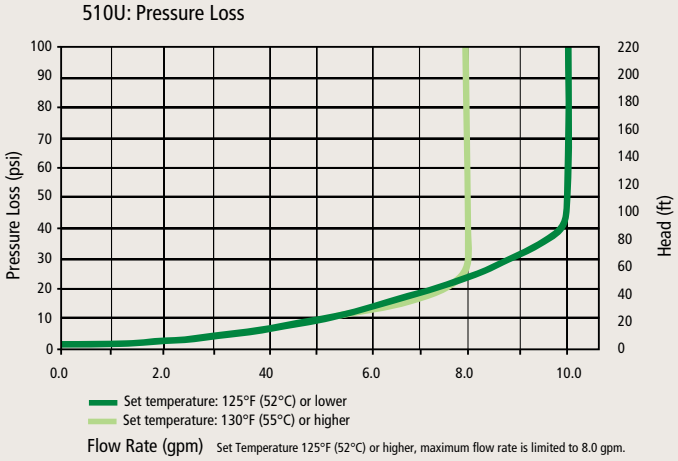

140H SERIES

The 140H Series is a high efficiency, ultra-low NOx condensing model with up to 0.91 Uniform Energy Factor, allowing for the use of 3"or 4" PVC venting or Category IV stainless steel. Indoor models have an integrated temperature controller and outdoor models include a remote control as a standard feature.

ATI-140H

ATO-140H

Specifications

Model Number*	Type	Gas Consumption Input		Inlet Gas Pressure**		UEF
		Minimum (BTU/H)	Maximum (BTU/H)	Minimum (in. W.C.)	Maximum (in. W.C.)	
ATI-140H-N	Natural	15,000	120,000	4.0	10.5	0.90
ATO-140H-N	Natural	15,000	120,000	4.0	10.5	0.91

Model Number*	Maximum GPM	Hot/Cold Connections	Gas Connection	Clearances (in.)				Approx Shipping Weight (lbs)
				Top	Bottom	Side	Front	
ATI-140H-N	6.6	3/4" NPT	1/2" NPT	12	12	3	4	54
ATO-140H-N	6.6	3/4" NPT	1/2" NPT	36	12	3	24	52

*For propane models, change "N" to "P"
**For propane models, minimum fire is 13,000 BTU/H, minimum inlet gas pressure is 8.0 in. W.C. and maximum inlet gas pressure is 14.0 in. W.C.

140H Temperature Settings	Dipswitches	120°F (default) 140°F		
	With 100209924 remote (max. distance 400' from heater, non-polarized 120 gauge wiring.)			
	100°F to 140°F with 5°F intervals (9 options), 120°F Default Factory Setting			
Electric	120 V	54 W / 0.7 A (Operation)	3 W / 0.05 A (Standby)	224 W / 2 A (Freeze-Protection)

AHRI CERTIFIED® www.ahridirectory.org

Meets: SCAQMD Rule 1146.2 California and Texas

ENERGY STAR

DESIGN CERTIFIED

LOW-LEAD IAPMO P&T

ANSI Z21.10.3 • CSA 4.3

CONDENSING

Specifications

Indoor and Outdoor Installation Options

Power Vent or Power Direct Vent Design

Ultra-Low NOx Emissions

Flow Rate up to 6.6 GPM

- Values based on factory testing. 0.4 GPM required for continuous fire after initial ignition

Water Pressure: 15-150 psi

- Pressure Only Relief Valve Requires (Min 120,000 btu/h, 150 psi).
- 40 psi or above recommended for max. flow

Warranty

- 15-year limited warranty on heat exchanger in residential applications.
- 5-year limited warranty on heat exchanger in commercial applications.
- 5-year warranty on all parts.
- Refer to hotwater.com for further warranty details

Dimensions

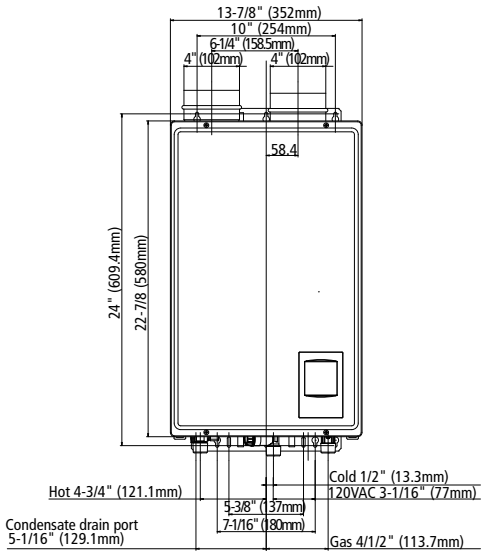

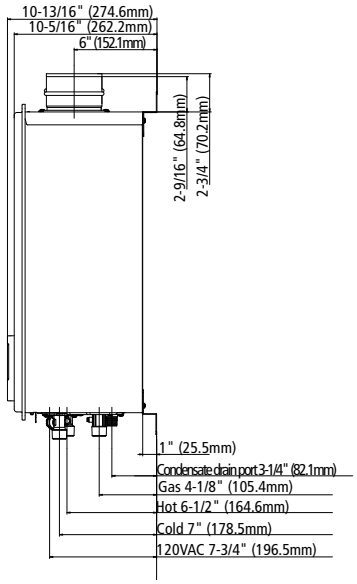

140H: Flow Rate vs. Temperature Rise

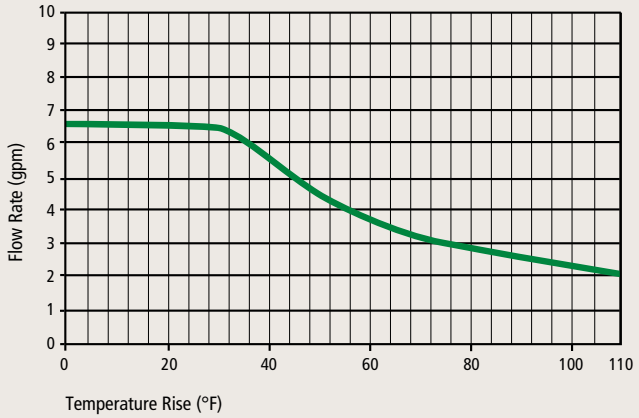

140H: Pressure Loss

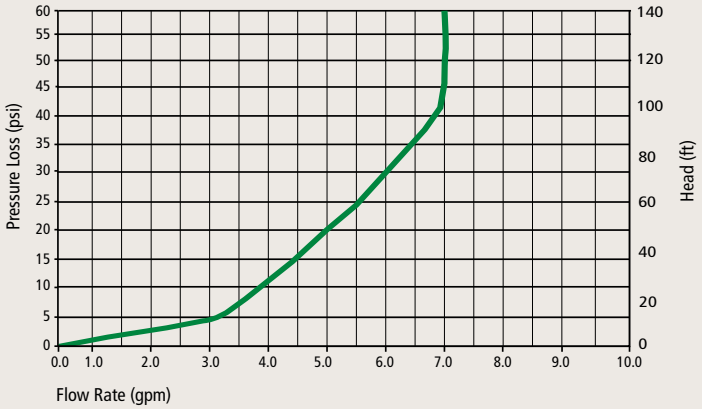

CONDENSING

240H SERIES

The 240H series offers high efficiency Ultra-Low NOx condensing technology allowing for the use of 3" PVC venting and has 0" clearance to combustibles. Indoor models have an integrated temperature controller and outdoor models include a remote control as a standard feature.

ATI-240H

ATO-240H

Specifications

Model Number*	Type	Gas Consumption Input		Inlet Gas Pressure**		UEF
		Minimum (BTU/H)	Maximum (BTU/H)	Minimum (in. W.C.)	Maximum (in. W.C.)	
ATI-240H-N	Natural	15,000	160,000	4.0	10.5	0.94
ATO-240H-N	Natural	15,000	160,000	4.0	10.5	0.95

Model Number*	Maximum GPM	Hot/Cold Connections	Gas Connection	Clearances (in.)				Approx Shipping Weight (lbs)
				Top	Bottom	Side	Front	
ATI-240H-N	6.6	3/4" NPT	3/4" NPT	12	12	3	4	71
ATO-240H-N	6.6	3/4" NPT	3/4" NPT	36	12	3	24	69

*For propane models, change "N" to "P"
**For propane models, minimum fire rate is 13,000 BTU/H, minimum inlet gas pressure is 8.0 in. W.C. and maximum inlet gas pressure is 14.0 in. W.C.

240H Temperature Settings	Built In / without remote	120°F (default) 140°F		
	With 100209924 remote (max. distance 400' from heater, non-polarized 20 gauge wiring.)			
	100°F to 140°F with 5°F intervals (9 options), 120°F Default Factory Setting			
Electric	120 V	73 W / 0.61 A (Operation)	3 W / 0.03 A (Standby)	174 W / 1.5 A (Freeze-Protection)

AHRI CERTIFIED® www.ahridirectory.org

Meets: SCAQMD Rule 1146.2 California and Texas

ENERGY STAR

DESIGN CERTIFIED

LOW-LEAD IAPMO P&T

ANSI Z21.10.3 • CSA 4.3

Specifications

Indoor and Outdoor Installation Options

Power Vent or Power Direct Vent Design

Ultra-Low NOx Emissions

Flow Rate up to 6.6 GPM

- Values based on factory testing. 0.4 GPM required for continuous fire after initial ignition

Water Pressure: 15-150 psi

- Pressure Only Relief Valve Requires (Min 160,000 btu/h, 150 psi).
- 40 psi or above recommended for max. flow

Warranty

- 15-year limited warranty on heat exchanger in residential applications.
- 5-year limited warranty on heat exchanger in commercial applications.
- 5-year warranty on all parts.
- Refer to hotwater.com for further warranty details

Dimensions

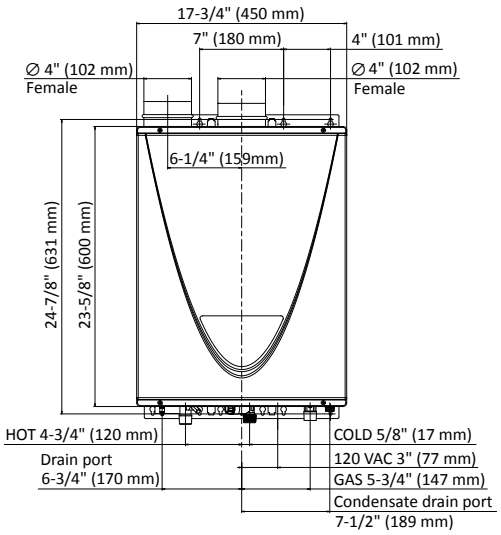

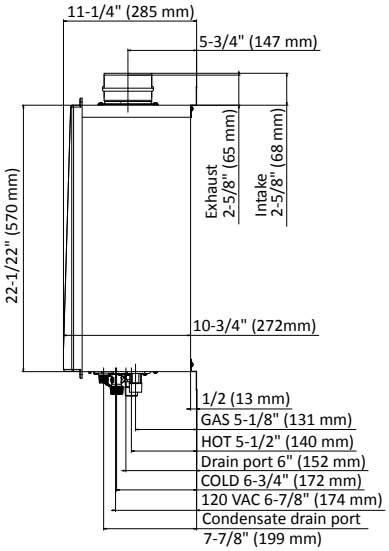

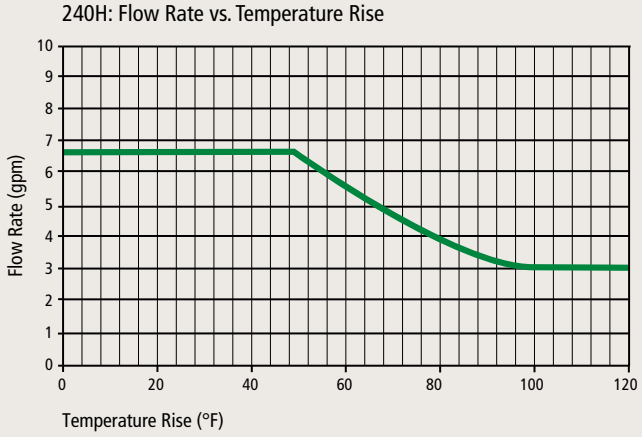

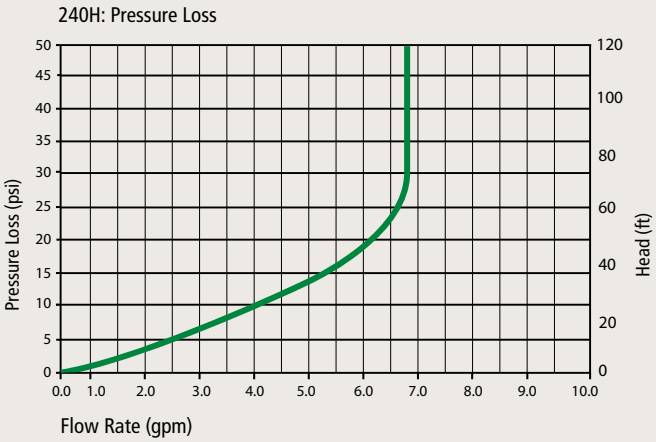

340H SERIES

The 340H series offers high efficiency Ultra-Low NOx condensing technology allowing for the use of 3" PVC venting and has 0" clearance to combustibles. Indoor models are certified up to 10,100 ft. altitude. Indoor models have an integrated temperature controller and outdoor models include a remote control as a standard feature.

ATI-340H

ATO-340H

Specifications

Model Number*	Type	Gas Consumption Input		Inlet Gas Pressure**		UEF
		Minimum (BTU/H)	Maximum (BTU/H)	Minimum (in. W.C.)	Maximum (in. W.C.)	
ATI-340H-N	Natural	15,000	180,000	4.0	10.5	0.95
ATO-340H-N	Natural	15,000	180,000	4.0	10.5	0.94

Model Number*	Maximum GPM	Hot/Cold Connections	Gas Connection	Clearances (in.)				Approx Shipping Weight (lbs)
				Top	Bottom	Side	Front	
ATI-340H-N	8	3/4" NPT	3/4" NPT	12	12	3	4	71
ATO-340H-N	8	3/4" NPT	3/4" NPT	36	12	3	24	69

*For propane models, change "N" to "P"
**For propane models, minimum fire rate is 13,000 BTU/H, minimum inlet gas pressure is 8.0 in. W.C. and maximum inlet gas pressure is 14.0 in. W.C.

340H Temperature Settings	Built In / without remote	120°F (default) 140°F		
	With 100209924 remote (max. distance 400' from heater, non-polarized 20 gauge wiring.)			
	100°F to 140°F with 5°F intervals (9 options), 120°F Default Factory Setting			
Electric	120 V	78 W / 0.65 A (Operation)	3 W / 0.03 A (Standby)	174 W / 1.5 A (Freeze-Protection)

AHRI CERTIFIED® www.ahridirectory.org

Meets: SCAQMD Rule 1146.2 California and Texas

ENERGY STAR

DESIGN CERTIFIED

LOW-LEAD IAPMO P&T

ANSI Z21.10.3 • CSA 4.3

CONDENSING

Specifications

Indoor and Outdoor Installation Options

Power Vent or Power Direct Vent Design

Ultra-Low NOx Emissions

Flow Rate up to 8 GPM

- Values based on factory testing. 0.4 GPM required for continuous fire after initial ignition

Water Pressure: 15-150 psi

- Pressure Only Relief Valve Requires (Min 180,000 btu/h, 150 psi).
- 40 psi or above recommended for max. flow

Warranty

- 15-year limited warranty on heat exchanger in residential applications.
- 5-year limited warranty on heat exchanger in commercial applications.
- 5-year warranty on all parts.
- Refer to hotwater.com for further warranty details

Dimensions

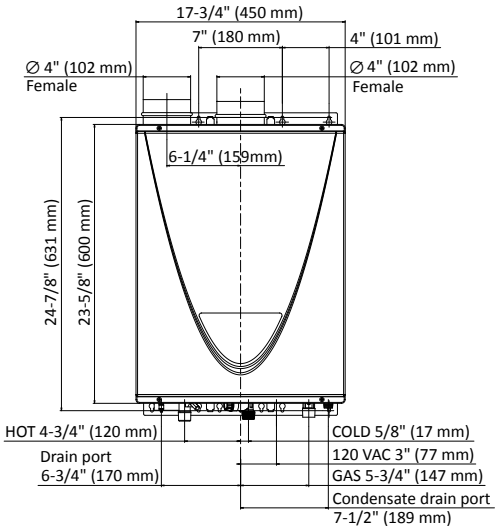

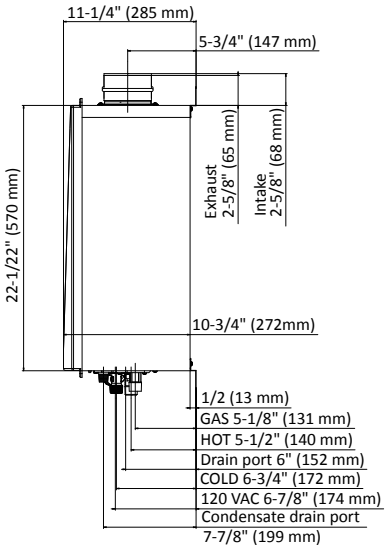

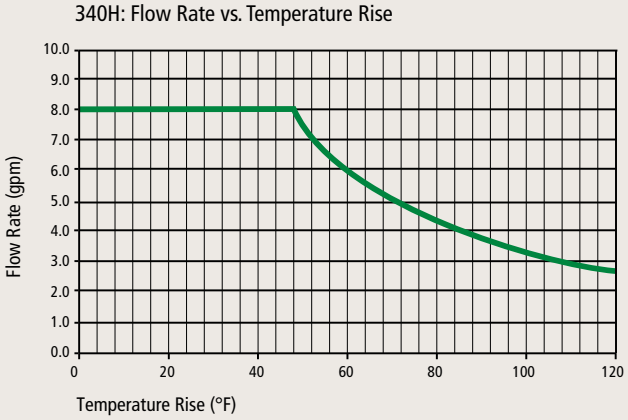

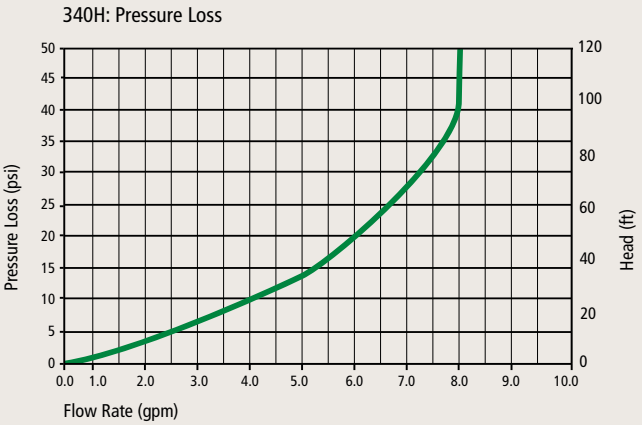

CONDENSING

540H SERIES

Complies with Ultra-Low NOx regulations. Utilizing commercial-grade copper alloy for the heat exchanger tubing, the 540H is also suitable for heavier residential usages such as combination space heating and domestic recirculation systems. Indoor models have an integrated temperature controller and outdoor models include a remote control as a standard feature. Indoor models are certified up to 10,100 ft. altitude.

ATI-540H-N

ATO-540H-N

Specifications

Model Number*	Type	Gas Consumption Input		Inlet Gas Pressure**		UEF
		Minimum (BTU/H)	Maximum (BTU/H)	Minimum (in. W.C.)	Maximum (in. W.C.)	
ATI-540H-N	Natural	15,000	199,000	4.0	10.5	0.93
ATO-540H-N	Natural	15,000	199,000	4.0	10.5	0.95

Model Number*	Maximum GPM	Hot/Cold Connections	Gas Connection	Clearances (in.)				Approx Shipping Weight (lbs)
				Top	Bottom	Side	Front	
ATI-540H-N	10	3/4" NPT	3/4" NPT	12	12	3	4	71
ATO-540H-N	10	3/4" NPT	3/4" NPT	36	12	3	24	69

*For propane models, change "N" to "P"
**For propane models, minimum fire rate is 13,000 BTU/H, minimum inlet gas pressure is 8.0 in. W.C. and maximum inlet gas pressure is 14.0 in. W.C.

540H Temperature Settings	Built In / without remote	120°F (default) 140°F		
	With 100209924 remote (max. distance 400' from heater, non-polarized 20 gauge wiring.)			
	100°F to 160 °F with 5°F intervals (13 options), 120°F Default Factory Setting			
Electric	120 V	89 W / 0.74 A (Operation)	4 W / 0.04 A (Standby)	175 W / 1.5 A (Freeze-Protection)

AHRI CERTIFIED® www.ahridirectory.org · Meets: SCAQMD Rule 1146.2 California and Texas · ENERGY STAR · NSF · DESIGN GB CERTIFIED® · LOW-LEAD IAPMO R&T

ANSI Z21.10.3 • CSA 4.3

Specifications

Indoor and Outdoor Installation Options

Power Vent or Power Direct Vent Design

Ultra-Low NOx Emissions

Flow Rate up to 10 GPM

- Values based on factory testing. 0.4 GPM required for continuous fire after initial ignition

Water Pressure: 15-150 psi

- Pressure Only Relief Valve Requires (Min 199,000 btu/h, 150 psi).
- 40 psi or above recommended for max. flow

Easy-Link up to 4 heaters or connect up to 20 heaters with a Multi-Unit Controller

Warranty

- 15-year limited warranty on heat exchanger in residential applications.
- 5-year limited warranty on heat exchanger in commercial applications.
- 5-year warranty on all parts.
- Refer to hotwater.com for further warranty details

Dimensions

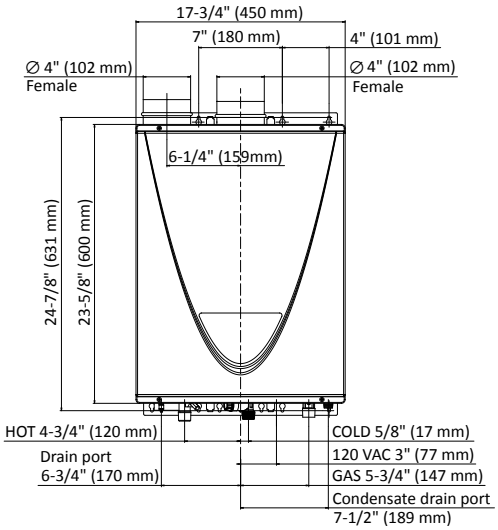

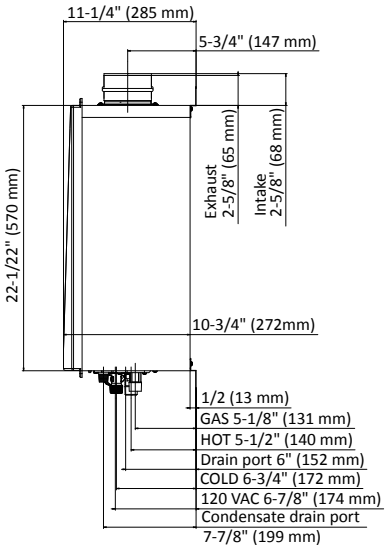

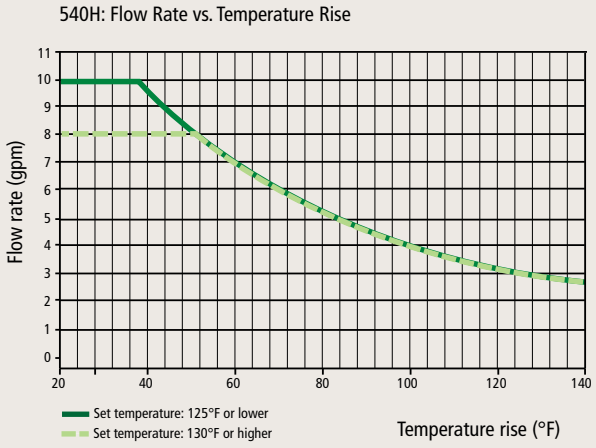

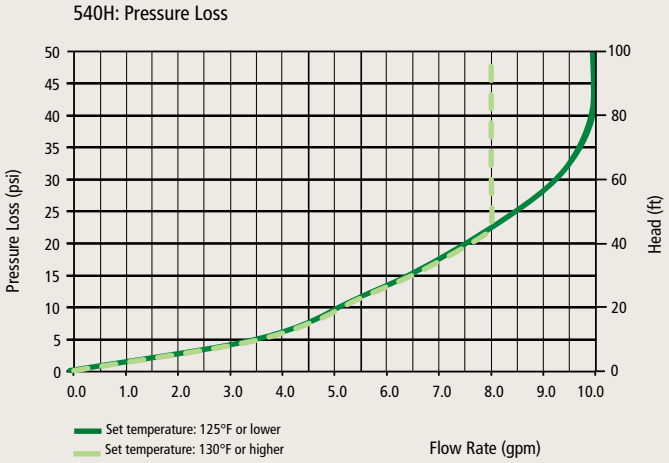

540P SERIES

The 540P Series integrates a recirculation pump to provide instant hot water in residential applications with dedicated recirculation lines. The pump is easily controlled with a simple user interface and multiple pump settings allow you to customize pump operation to meet your needs while maximizing heater efficiency. Indoor models have an integrated temperature and pump controller and outdoor models include a remote control as a standard feature.

ATI-540P-N

ATO-540P-N

Specifications

Model Number*	Type	Gas Consumption Input		Inlet Gas Pressure**		UEF
		Minimum (BTU/H)	Maximum (BTU/H)	Minimum (in. W.C.)	Maximum (in. W.C.)	
ATI-540P-N	Natural	15,000	199,000	4.0	10.5	0.93
ATO-540P-N	Natural	15,000	199,000	4.0	10.5	0.95

Model Number*	Maximum GPM	Hot/Cold Connections	Gas Connection	Clearances (in.)				Approx Shipping Weight (lbs)
				Top	Bottom	Side	Front	
ATI-540P-N	10	3/4" NPT	3/4" NPT	12	12	3	4	71
ATO-540P-N	10	3/4" NPT	3/4" NPT	36	12	3	24	70

*For propane models, change "N" to "P"
**For propane models, minimum fire is 13,000 BTU/H, minimum inlet gas pressure is 8.0 in. W.C. and maximum inlet gas pressure is 14.0 in. W.C.

540P Temperature Settings	Built In / without remote	120°F (default) 140°F		
	With 100276687 remote (max. distance 400' from heater, non-polarized 20 gauge wiring.)			
	100°F to 140°F with 5°F intervals (9 options), 120°F Default Factory Setting			
Electric	120 V	1.09 W / 1.34 A (Operation)	5 W / 0.1 A (Standby)	192 W / 1.6 A (Freeze-Protection)

AHRI CERTIFIED® www.ahridirectory.org

Meets: SCAQMD Rule 1146.2 California and Texas

ENERGY STAR

DESIGN CERTIFIED

LOW-LEAD IAPMO R&T

ANSI Z21.10.3 • CSA 4.3

CONDENSING

Specifications

Indoor and Outdoor Installation Options

Power Vent or Power Direct Vent Design

Ultra-Low NOx Emissions

Integrated recirculation pump

Flow Rate up to 10 GPM

- Values based on factory testing. 0.4 GPM required for continuous fire after initial ignition

Water Pressure: 15-150 psi

- Pressure Only Relief Valve Requires (Min 199,000 btu/h, 150 psi).
- 40 psi or above recommended for max. flow

Easy-Link with up to 3 other 540H heaters

Warranty

- 15-year limited warranty on heat exchanger in residential applications.
- 5-year limited warranty on heat exchanger in commercial applications.
- 5-year warranty on all parts.
- Refer to hotwater.com for further warranty details

Dimensions

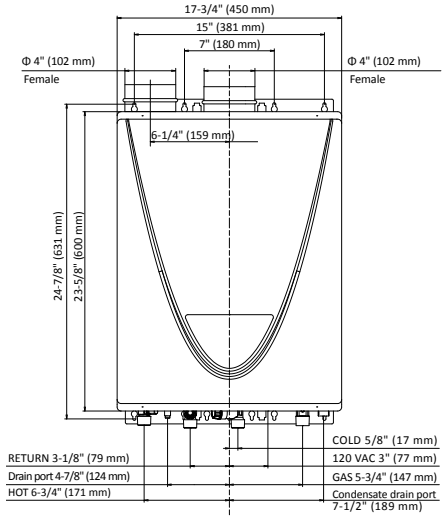

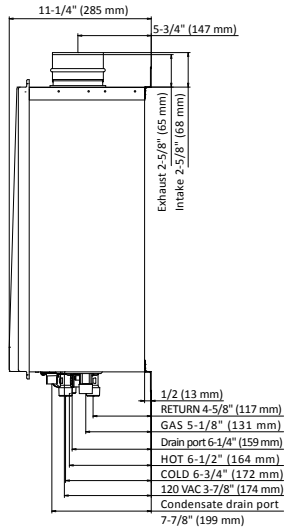

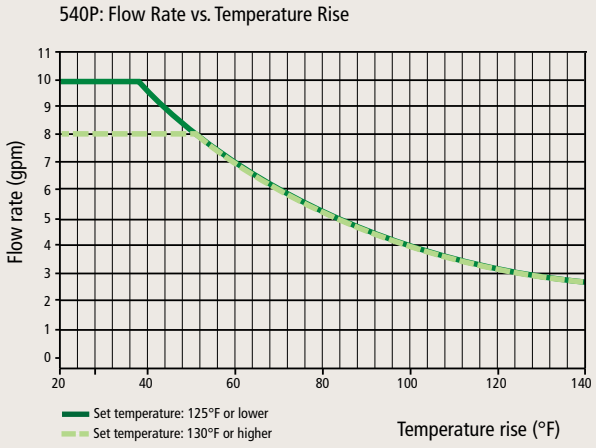

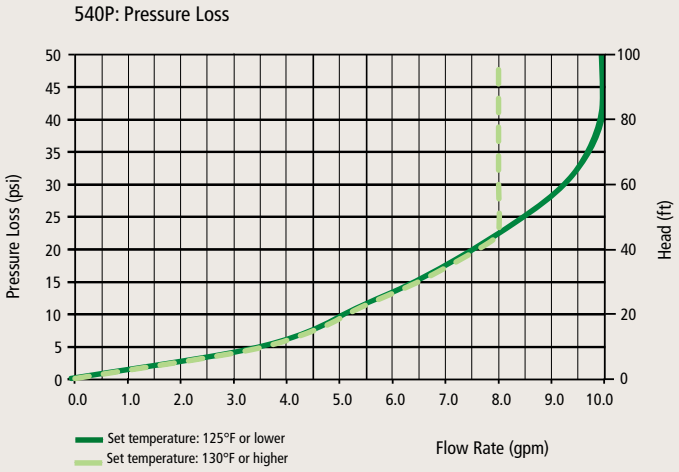

COMMERCIAL

910 SERIES

The 910 Series, specifically designed for heavy-duty applications, is the largest A. O. Smith tankless heater yet and the most powerful (14.5 GPM max) in the tankless industry. The 910 Series is suitable for commercial applications (hotels, restaurants, government, convalescent homes, etc.) that require high demand and the most durable of heaters. Along with commercial-grade copper alloy, the 910 Series is the only commercial unit in the industry that offers a "dual-combustion system," providing redundancy for added reliability.

ATIO-910-N

Specifications

Model Number*	Type	Gas Consumption Input		Inlet Gas Pressure**		Thermal Efficiency
		Minimum (BTU/H)	Maximum (BTU/H)	Minimum (in. W.C.)	Maximum (in. W.C.)	
ATIO-910-N	Natural	15,000	380,000	4.0	10.5	80%

Model Number*	Connections		Clearances (in.)				Approx Shipping Weight (lbs)
	Water	Gas	Top	Bottom	Side	Front	
ATIO-910-N	1" NPT	1" NPT	12***	12	2	4***	113

†For ASME version, use model number ATIO-910-A(N/P)
*For propane models, change "N" to "P"
**For propane models, minimum inlet gas pressure is 8.0 in. W.C. and maximum inlet gas pressure is 14.0 in. W.C.
***If installed outdoors, top clearance is 36" and front clearance is 24"

ATIO-910 Temperature Settings	Built In / without remote	110°F, 115°F, 120°F (default), 135°F, 145°F, 155°F, 165°F, 185°F		
	With 100112155 remote (max. distance 400' from heater, non-polarized 20 gauge wiring.)			
	100°F to 175°F with 5°F intervals (16 options), 120°F Default Factory Setting			
Electric	120 VAC	175 W / 1.48 A (Operation)	16 W / 0.13 A (Standby)	271 W / 2.26 A (Freeze-Protection)

ANSI Z21.10.3 • CSA 4.3

Specifications

Indoor and Outdoor Installation Options

Power Vent or Power Direct Vent Design

Low NOx Emissions

Flow Rate up to 14.5 GPM

- Values based on factory testing. 0.4 GPM required for continuous fire after initial ignition

Water Pressure: 15-150 psi

- Pressure Only Relief Valve Requires (Min 380,000 btu/h, 150 psi).
- 40 psi or above recommended for max. flow

Easy-Link up to 4 heaters or connect up to 10 heaters with a Multi-Unit Controller

Warranty

- 6-year limited warranty on heat exchanger in commercial applications.
- 5-year warranty on all parts.
- Refer to hotwater.com for further warranty details

Dimensions

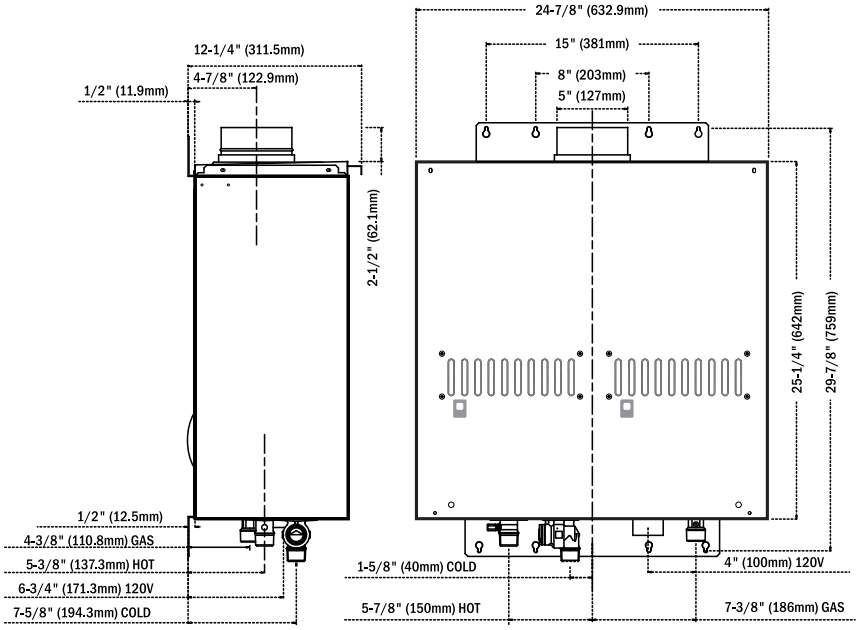

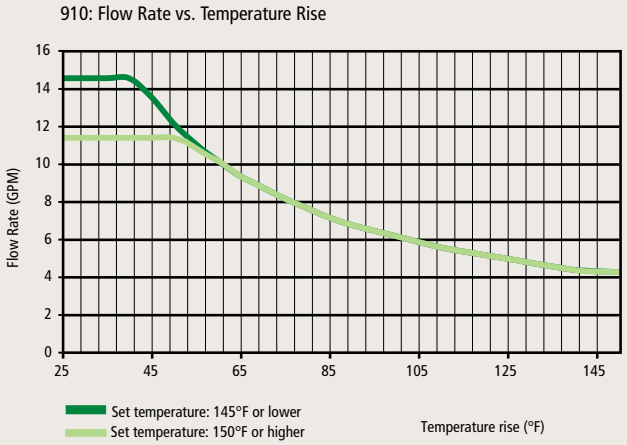

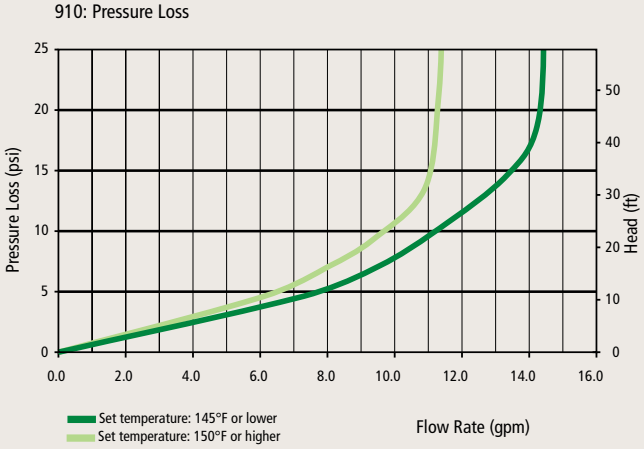

COMMERCIAL

CT-199 SERIES

The CT-199 is well suited for commercial applications such as small restaurants and beauty salons. Complies with Ultra-Low NOx regulations. Utilizing commercial-grade copper alloy for the heat exchanger tubing, the CT-199 is also suitable for combination space heating and domestic recirculation systems. Indoor models have an integrated temperature controller and outdoor models include a remote control as a standard feature. Indoor models are certified up to 10,100 ft. altitude.

CT-199I

CT-199O

Specifications

Model Number*	Type	Gas Consumption Input		Inlet Gas Pressure**		Thermal Efficiency	UEF
		Minimum (BTU/H)	Maximum (BTU/H)	Minimum (in. W.C.)	Maximum (in. W.C.)		
ACT-199I-N	Natural	15,000	199,000	4.0	10.5	96%	0.93
ACT-199O-N	Natural	15,000	199,000	4.0	10.5	96%	0.95

Model Number*	Maximum GPM	Hot/Cold Connections	Gas Connection	Clearances (in.)				Approx Shipping Weight (lbs)
				Top	Bottom	Side	Front	
ACT-199I-N	10	3/4" NPT	3/4" NPT	12	12	3	4	71
ACT-199O-N	10	3/4" NPT	3/4" NPT	36	12	3	24	69

*For propane models, change "N" to "P"
**For propane models, minimum fire rate is 13,000 BTU/H, minimum inlet gas pressure is 8.0 in. W.C. and maximum inlet gas pressure is 14.0 in. W.C.

CT-199 Temperature Settings	Built In / without remote	120°F (default) 140°F		
	With 100112572 remote (max. distance 400' from heater, non-polarized 20 gauge wiring.)			
	100°F to 185°F with 5°F intervals (16 options), 120°F Default Factory Setting			
Electric	120 V	89 W / 0.74 A (Operation)	4 W / 0.04 A (Standby)	175 W / 1.5 A (Freeze-Protection)

AHRI CERTIFIED® www.ahridirectory.org · Meets: SCAQMD Rule 1146.2 California and Texas · ENERGY STAR · NSF · DESIGN GREEN CERTIFIED · LOW-LEAD IAPMO PWT

ANSI Z21.10.3 • CSA 4.3

Specifications

Indoor and Outdoor Installation Options

Power Vent or Power Direct Vent Design

Ultra-Low NOx Emissions

Flow Rate up to 10 GPM

- Values based on factory testing. 0.4 GPM required for continuous fire after initial ignition

Water Pressure: 15-150 psi

- Pressure Only Relief Valve Requires (Min 199,000 btu/h, 150 psi).
- 40 psi or above recommended for max. flow

Easy-Link up to 4 heaters or connect up to 20 heaters with a Multi-Unit Controller

96% thermal efficiency

Warranty

- 6-year limited warranty on heat exchanger in commercial applications.
- 5-year warranty on all parts.
- Refer to hotwater.com for further warranty details

Dimensions

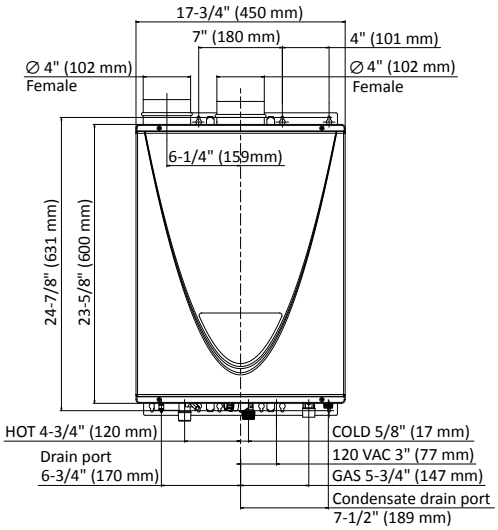

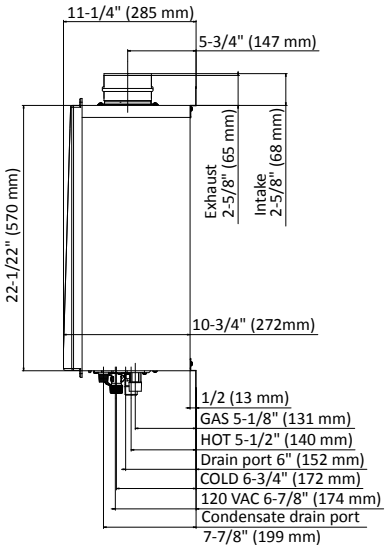

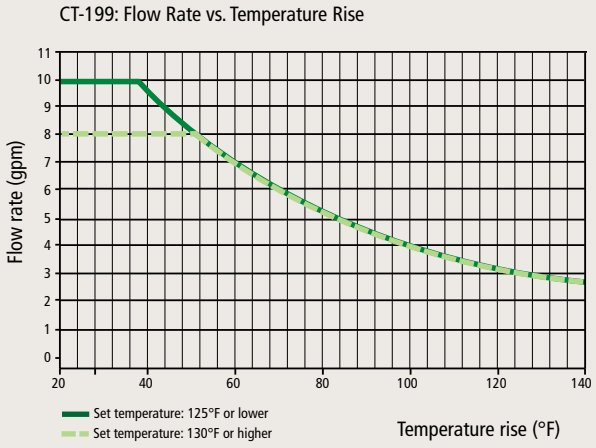

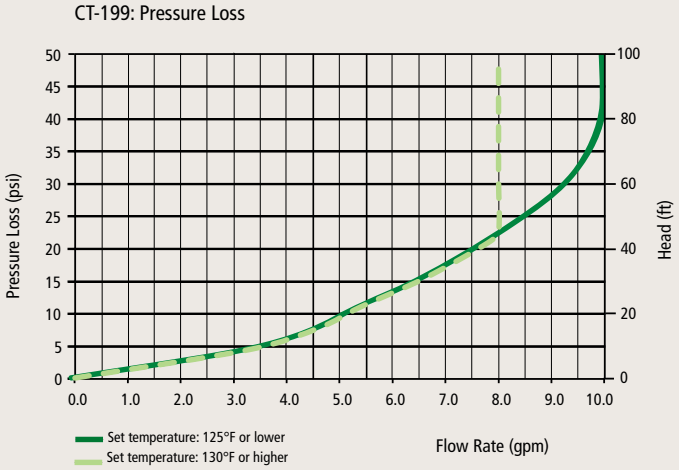

COMMERCIAL TANKLESS RACK SYSTEM

Commercial tankless rack systems allow the power of tankless technology to be customized with unprecedented flexibility. A. O. Smith offers wall mount, free standing and back-to-back configurations with easy options to integrate storage when needed. For jobs that require more than six units, custom solutions are available.

Installation is easier than ever as the rack systems are constructed from a light weight frame and just three connections for hot water, cold water and gas.

Commercial rack systems are expandable with up to 1,194,000 BTU on a single system. The rack system is designed so that individual units can be isolated for maintenance without shutting down the entire rack to provide non-stop operation.

MULTI-UNIT SYSTEMS

A. O. Smith tankless water heaters have the capability to link multiple heaters together to act as a system. The primary heater is rotated to ensure even operation of all heaters. The 510/U/C, 540H, CT-199, and 910 models can Easy-Link up to four units using included communication cables.

For even larger applications the 510U (series 200), 510C, 540H, CT-199, and 910 models also feature the Multi-Unit System, allowing a greater number of units to work together as an integrated system using a Multi-Unit System Controller. The Multi-Unit System can control up to twenty 510U (series 200), 510C, 540H, and CT-199 or up to ten 910 heaters.

Unit Comparison

	510 Series	510U/C Series	540H/CT-199 Series	910 Series
Easy-Link (No Controller Necessary)	Up to 4 units	Up to 4 units	Up to 4 units	Up to 4 units
Maximum input (BTU/h)	796,000	796,000	796,000	1,520,000
Multi-UNIT*	N/A	Up to 20 units	Up to 20 units	Up to 10 units
Maximum input (BTU/h)	N/A	3,980,000	3,980,000	3,800,000
*Requires Multi-Unit Controller: 100112691				

COMMON VENTING

The A. O. Smith common venting system utilizes fewer unique components so you can design your venting based on project requirements.

- More design flexibility
- Fewer wall penetrations
- Able to use schedule 40 PVC on intake and exhaust
- Heaters don't de-rate when common vented
- Design doesn't override redundancy benefits

RESIDENTIAL COMBI BOILERS

DOMESTIC HOT WATER AND SPACE HEATING HOW IT WORKS:

- A hot water tap is opened causing incoming potable water to flow through the flat plate heat exchanger.
- Heated boiler water, supplied from the fire tube heat exchanger, flows through a diverter valve and into the flat plate heat exchanger where it prioritizes heating the incoming domestic water to the designated set point temperature.
- The integrated boiler pump circulates boiler water through the fire tube heat exchanger to keep it at set point temperature.
- When there is a call for space heating, the diverter valve directs the heated boiler water into the external space heating loop.

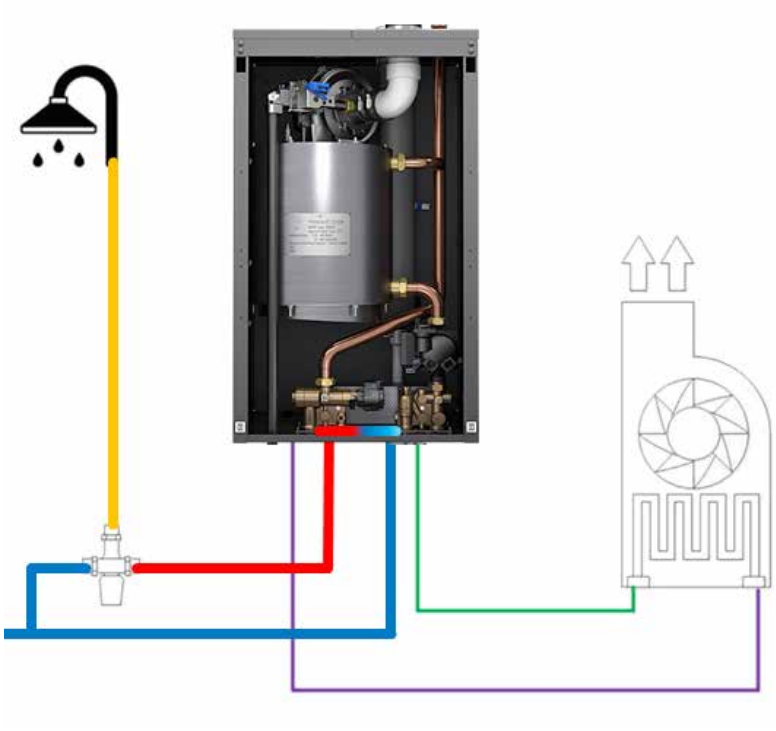

MORE HOT WATER

ProLine® XE combi boiler provides up to 74% more heating capacity than other combi boilers. For domestic hot water (DHW), it is also sized large enough to provide 2.6 gpm (110 model) to 4.8 gpm (199 model) at a 77°F temperature rise.

ENERGY CONSERVATION

With a 10:1 turndown ratio, the ProLine® XE combi boiler has the ability to modulate combustion to maximize efficiency and prevent short cycling when there are small heating demands.

COMPACT SIZE

The ProLine® XE combi boiler combines space heating and domestic hot water (DHW) in one appliance, providing a space saving choice for builders and specifying engineers.

COMBI BOILER FLOW RATE GUIDE

GPM Flow Rates

	Temperature Rise												
	40°F	45°F	50°F	55°F	60°F	65°F	70°F	75°F	80°F	85°F	90°F	95°F	100°F
110 model	5.1	4.5	4.0	3.7	3.4	3.1	2.9	2.7	2.5	2.4	2.2	2.1	2.0
150 model	6.9	6.1	5.5	5.0	4.6	4.2	3.9	3.7	3.5	3.2	3.1	2.9	2.8
199 model	9.2	8.2	7.4	6.7	6.1	5.7	5.3	4.9	4.6	4.3	4.1	3.9	3.7

INNOVATIVE DESIGN

Fire tube heat exchanger with a higher rated MAWP of 50 psi reduces unit pressure drop. The easy access front panel can be removed without tools to simplify service.

EASY INSTALLATION AND SERVICEABILITY

The LCD display is simple to navigate, providing diagnostic and system information in real words, not codes. The first time you turn on the combi boiler, you'll be lead through our Set Up Wizard for quick and easy programing.

COMPACT SIZE

The Preheat Function uses an integrated recirculation pump to ensure that the domestic hot water reaches its target temperature faster.The Air Handler Interlock prevents cool air delivery while the boiler is in domestic hot water mode to increase user comfort.

COMBI BOILER

PROLINE® XE COMBI BOILER

The ProLine® XE combi boiler is designed for residential domestic hot water and space heating applications. It's made with durable commercial-grade materials such as a stainless steel fire tube, brass connections and a brazed stainless steel flat plate heat exchanger. Designed with the contractor in mind, an easy-to-remove cover and advanced set up wizard function make the ProLine® XE combi boiler simple to install and maintain.

Specifications

Model Number*	Gas Consumption Input		Minimum in. W.C.†	Maximum in. W.C.	AFUE%	Heating Capacity BTU/H	Net AHRI Rating BTU/H
	Minimum BTU/H	Maximum BTU/H					
ACB-110S-N	11,000	110,000	4.0	14.0	95.0	102,000	89,000
ACB-150S-N	15,000	150,000	4.0	14.0	95.0	139,000	121,000
ACB-199S-N	19,999	199,999	4.0	14.0	95.0	185,000	161,000

Model Number*	GPM at 77°F Rise	Water Connections		Gas Connection	Approx. Shipping Weight (lbs)
		Space Heating	DHW		
ACB-110S-N	2.6	1″ NPT	3/4″ NPT	1/2″ NPT	139
ACB-150S-N	3.6	1″ NPT	3/4″ NPT	1/2″ NPT	142
ACB-199S-N	4.8	1″ NPT	3/4″ NPT	1/2″ NPT	159

*S Models can operate up to 4,500'. For high altitude (3,000' - 9,600'), change S to H. For liquid propane (LP), change N to P.
†For LP, minimum supply pressure is 8.0 in. W.C.
Indoor installation only.

110S Temperature Settings	Space Heating: 60°F – 190°F, Default 185°F		
	DHW: 60°F – 190°F, Default 150°F		
Electric	120 V	24V controls	2.2 Amps

AHRI CERTIFIED® www.ahridirectory.org · DESIGN CERTIFIED · ENERGY STAR · Meets: SCAQMD Rule 1146.2 California and Texas · Low Lead Content · ASME H

ANSI Z21.13 • CSA 4.9

Specifications

Indoor Installation Only

Meets Ultra-Low NOx requirements

Modulating burner with 10:1 turndown ratio

Power Direct Vent Design

DHW flow rate up to 4.8 gpm at 77°F temperature rise

50 PSI max pressure (boiler); 150 PSI max pressure (DHW)

Warranty

- 10-year limited warranty on heat exchanger in residential applications.
- 5-year warranty on all parts.
- Refer to hotwater.com for further warranty details

Dimensions

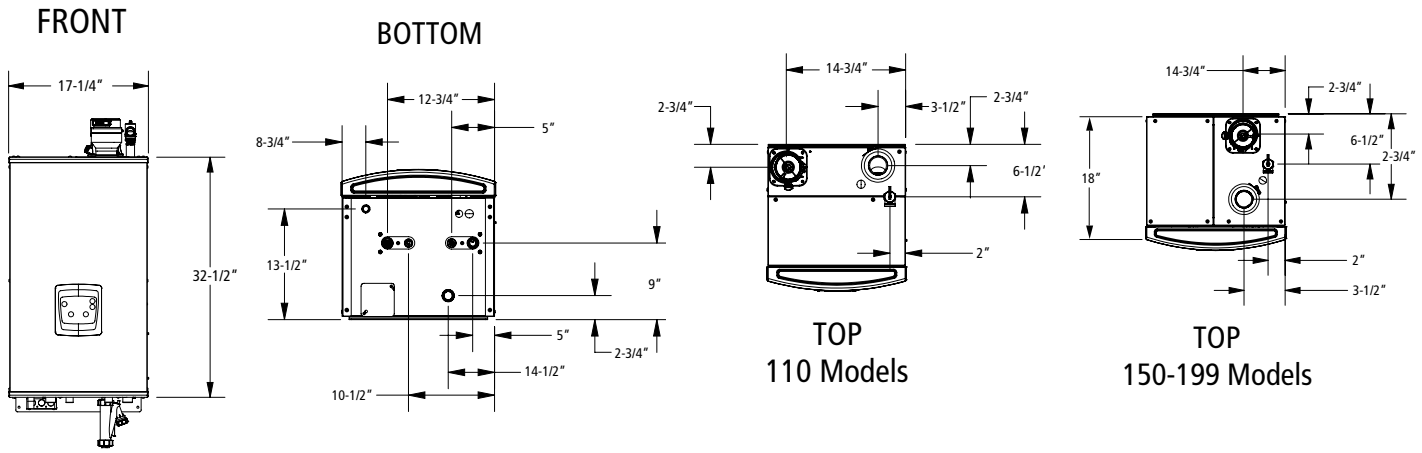

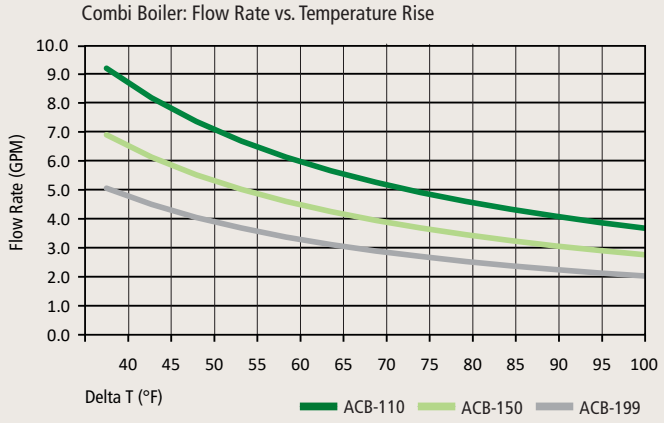

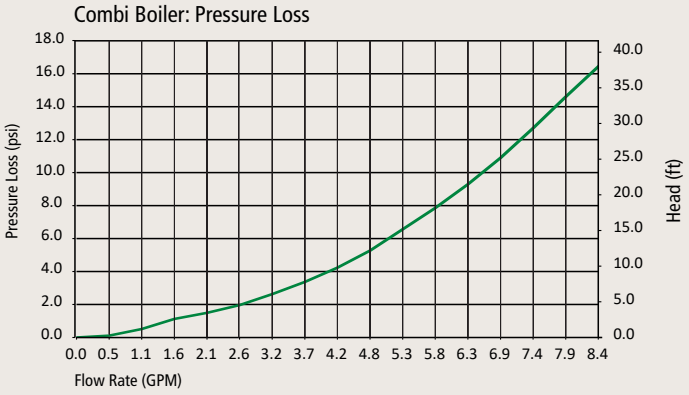

TANKLESS APPLICATION DIAGRAMS

A. O. Smith tankless water heaters can be used in a wide variety of applications. Whether used in recirculation systems, in conjunction with storage tanks or with heating applications, our commercial units are built to provide continuous hot water when sized appropriately for your home's needs.

*Local codes dictate proper compliance.

Legend

Pump

Shut Off / Isolation Valves

Pressure Relief Valve

Air Vent

Aquastat

Check Valve

Full Port Ball Valve

Basic Installation

(excluding 540P)

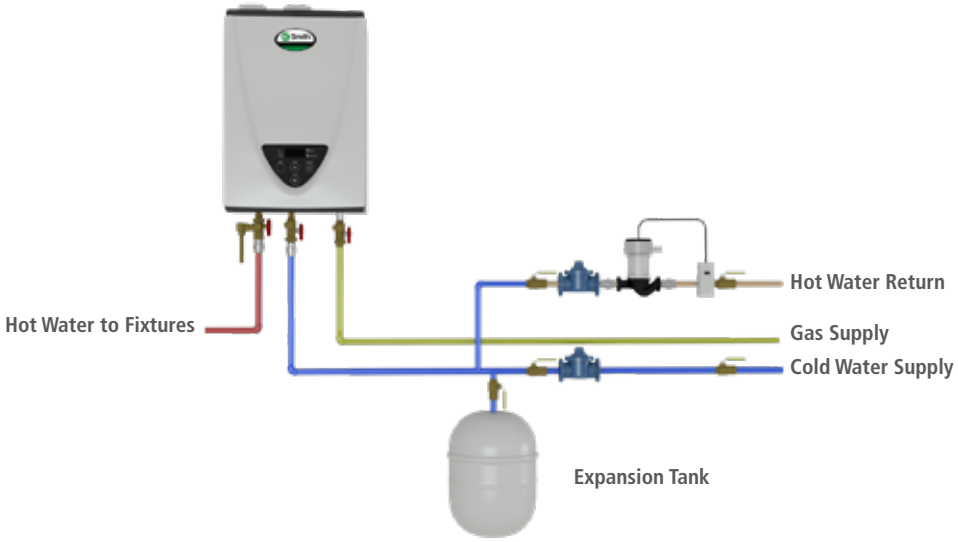

1. Recirculation pump shall be sized for 2-4 gpm per activated heater (4-8 gpm for 910)
2. Recirculation pump shall be controlled by an aquastat. The minimum suggested differential should be 10°F
3. For installations without recirculation, remove the check valves, pump, and aquastat.

540P Basic Installation

(540P only)

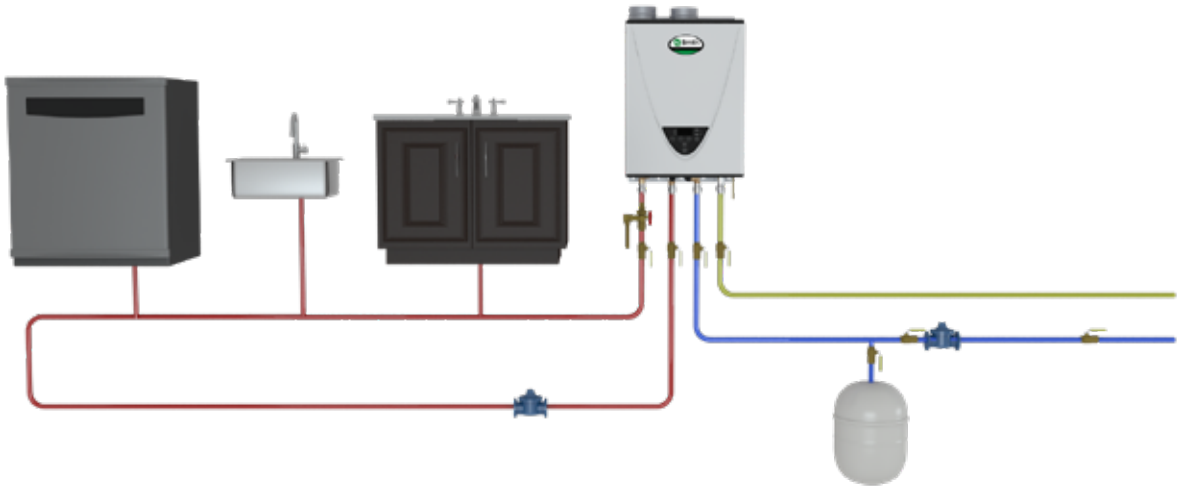

All application diagrams shown are concept drawings only. These diagrams are only to be used as basic guides. It is up to the application designer to properly design the plumbing layout and correctly size all components within an application (pumps, piping, storage tanks, water heaters, etc.). All national and local codes must be followed and will dictate proper compliance.

MULTIPLE UNITS

Multiple Units with Easy-Link

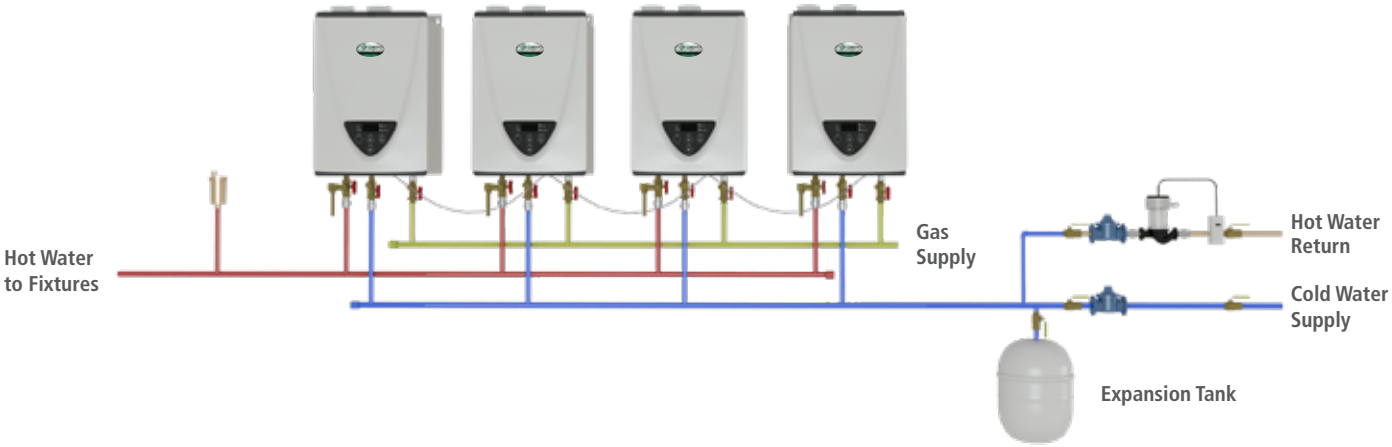

1. Recirculation pump shall be sized for 2-4 gpm per activated heater (4-8 gpm for 910)
2. Recirculation pump shall be controlled by an aquastat. The minimum suggested differential should be 10°F
3. The automatic air should be installed at the highest location of the system in accordance with the manufacturer's instructions.

Multiple Unit with the Multi-Unit Controller

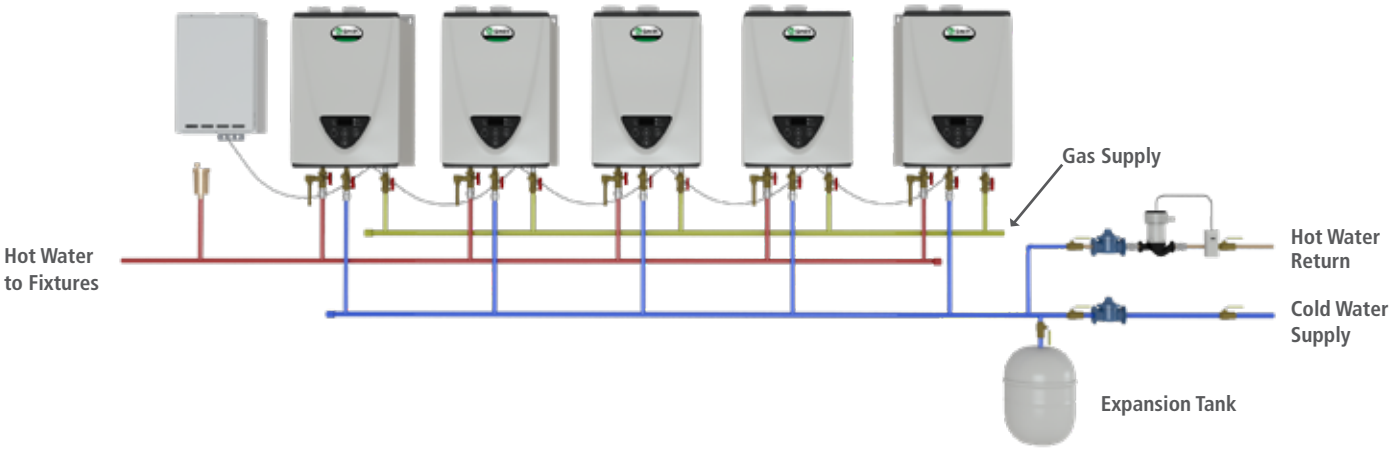

1. Recirculation pump shall be sized for 2-4 gpm per activated heater (4-8 gpm for 910)
2. Recirculation pump shall be controlled by an aquastat. The minimum suggested differential should be 10°F
3. The automatic air should be installed at the highest location of the system in accordance with the manufacturer's instructions.

All application diagrams shown are concept drawings only. These diagrams are only to be used as basic guides. It is up to the application designer to properly design the plumbing layout and correctly size all components within an application (pumps, piping, storage tanks, water heaters, etc.). All national and local codes must be followed and will dictate proper compliance.

MULTI-UNITS

Multiple Unit with Storage

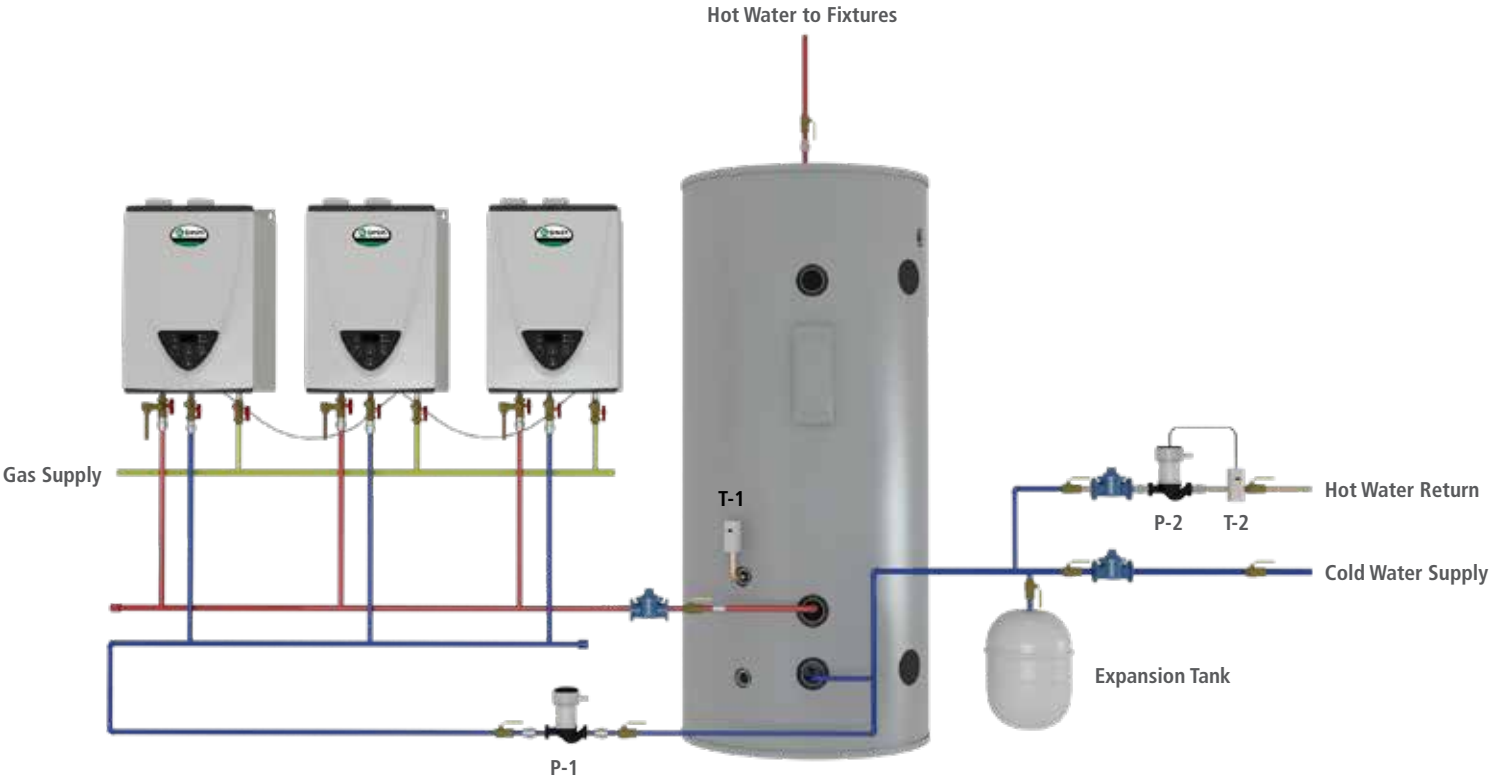

1. Tank circulation pump, P-1, should be controlled by tank aquastat, T-1.
2. Tank aquastat, T-1, should be set 20°F below water heater set temperature.
3. Pump P-1 should be sized to provide flow necessary to heat the storage tank.

Refer to the water heater's spec sheet for pressure drop curves.

All application diagrams shown are concept drawings only. These diagrams are only to be used as basic guides. It is up to the application designer to properly design the plumbing layout and correctly size all components within an application (pumps, piping, storage tanks, water heaters, etc.). All national and local codes must be followed and will dictate proper compliance.

SOLAR TANKLESS BACK UP

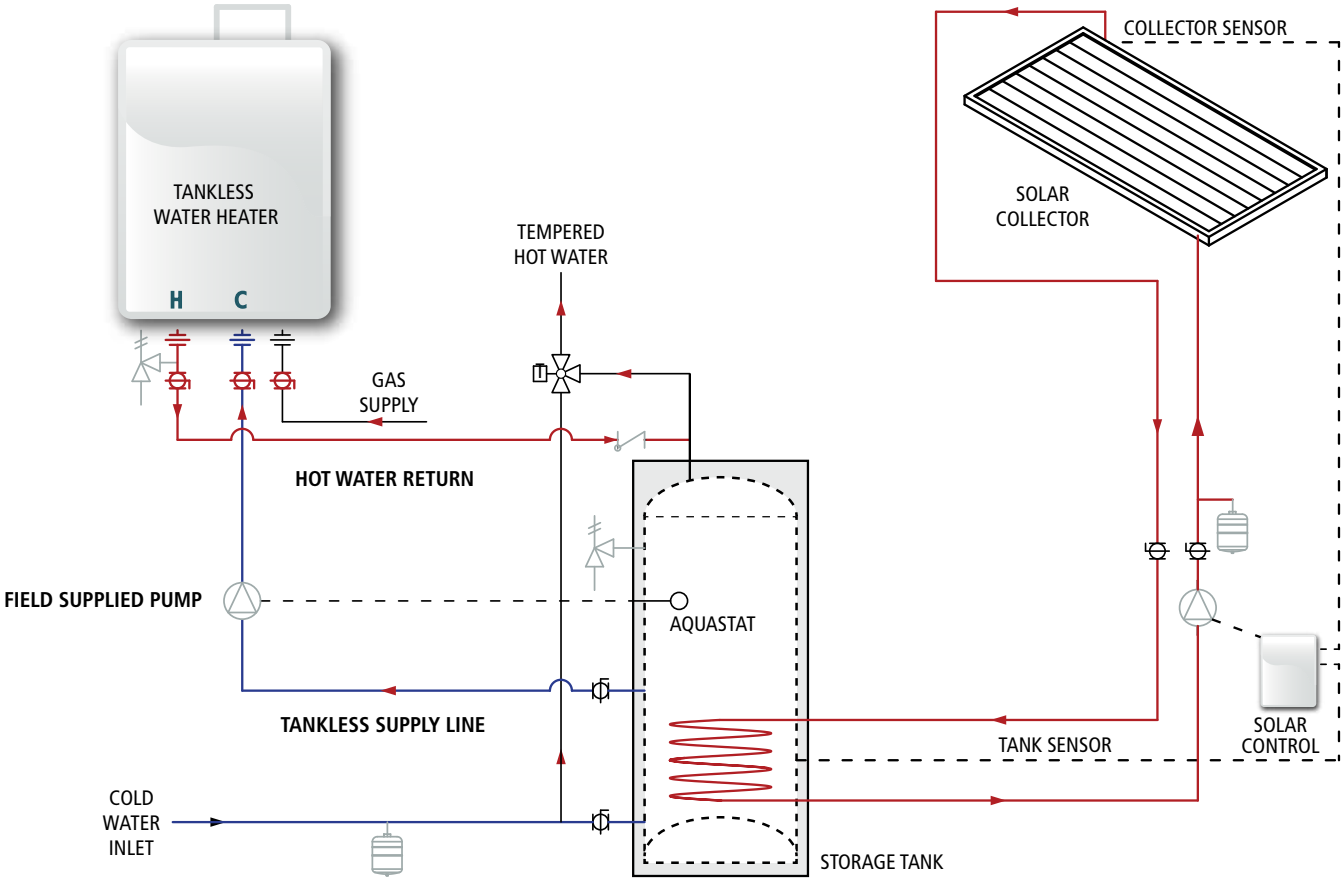

NOTES:

1. Ensure field supplied tank aquastat is in top 1/3 section of the tank.
2. Set tank aquastat 10°F lower than tankless unit set point.
3. Ensure the hot water return from the tankless unit is connected to the hot water outlet from the solar tank as shown in the drawing.
4. The supply line to the tankless unit may be made at the element fitting (after element is removed) with a 1"-11-1/2 NPSH fitting and gasket.
5. Field supplied pump must provide > 3 GPM flow through tankless backup loop - contact pump manufacturer for sizing assistance.

VENTING DIAGRAMS (EXAMPLES)

4” Sidewall Termination

(Please check the wall thickness for proper installation)

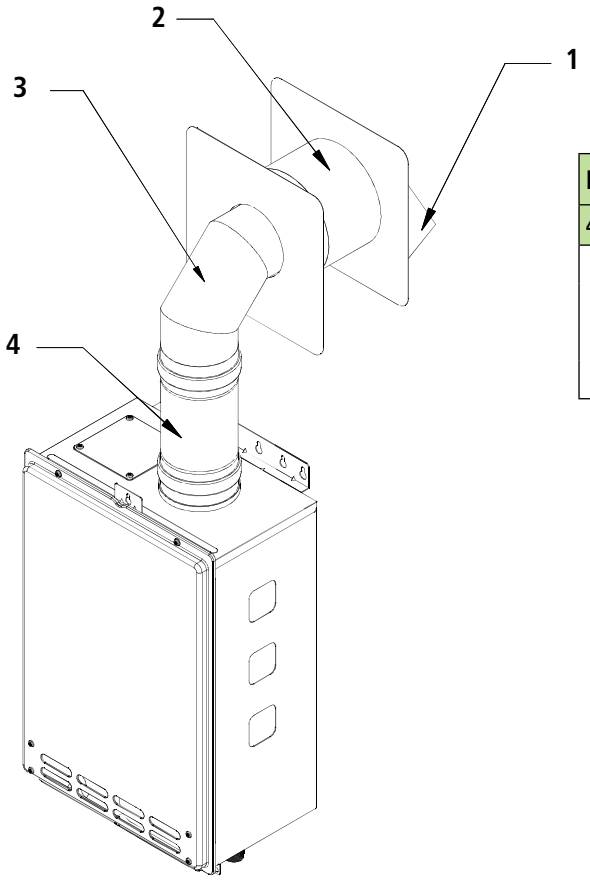

Models 110/U, 310/U, 510/U 4” Combustible Sidewall Termination				Qty.
Kit Part Number: 100112726	1	100112419	4" Sidewall Hood Terminator	1
	2	100112732	4" Wall Thimble (4.0"-7.0")	1
	3	100112400	4" 90 degree Elbow	1
	4	100112399	4" Female-Female Adaptor	1

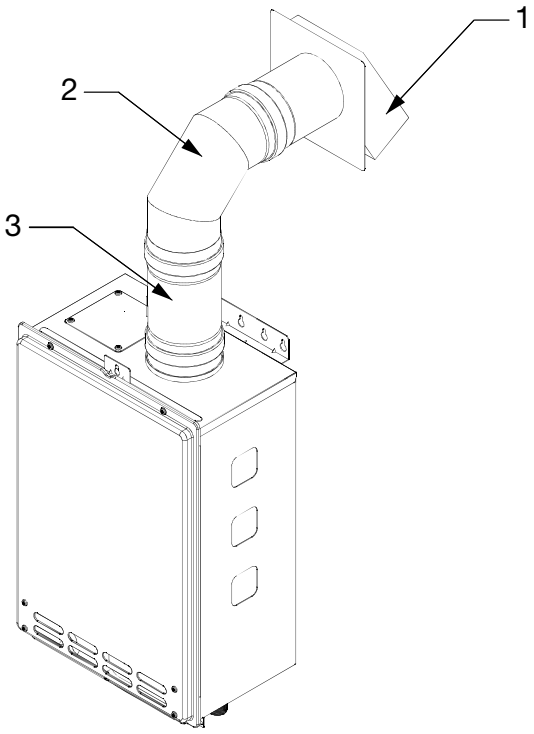

Models 110/U, 310/U, 510/U 4" Non-Combustible Sidewall Termination				Qty.
Kit Part Number: 100112767	1	100112419	4" Sidewall Hood Terminator	1
	2	100112400	4" 90 degree Elbow	1
	3	100112399	4" Female-Female Adaptor	1

4” Sidewall Termination

(With Condensate Trap)

(Please check the wall thickness
for proper installation)

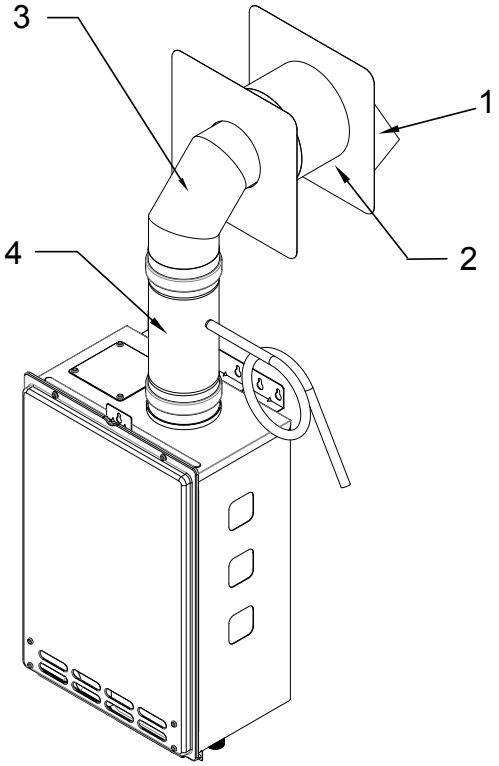

Models 110/U, 310/U, 510/U				Qty.
4” Combustible Sidewall Termination (With Condensate Trap)				
Kit Part Number: 100112775	1	100112419	4" Sidewall Hood Terminator	1
	2	100112732	4” Wall Thimble (4.0”-7.0”)	1
	3	100112400	4” 90 Degree Elbow	1
	4	100112549	4” Universal Appliance Adaptor	1

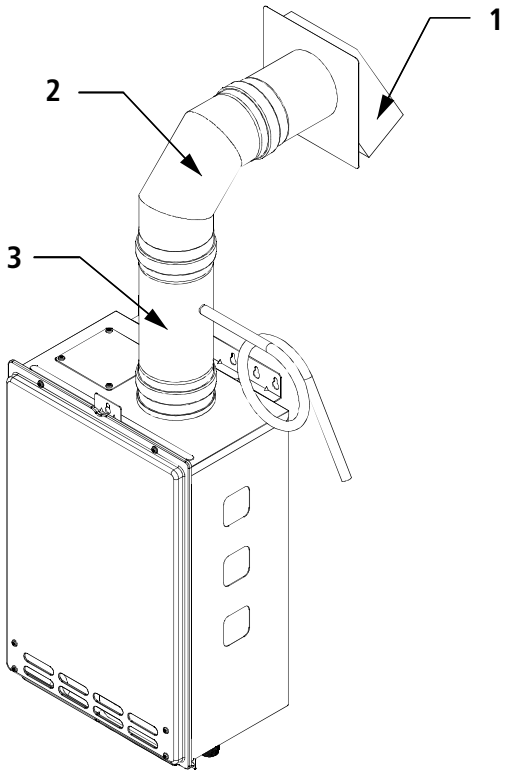

Models 110/U, 310/U, 510/U				Qty.
4" Non-Combustible Sidewall Termination (With Condensate Trap)				
Kit Part Number: 100112776	1	100112419	4" Sidewall Hood Terminator	1
	2	100112400	4" 90 degree Elbow	1
	3	100112549	4" Universal Appliance Adaptor	1

DIRECT VENT, CONCENTRIC SIDEWALL TERMINATION

110, 310, 510 Models

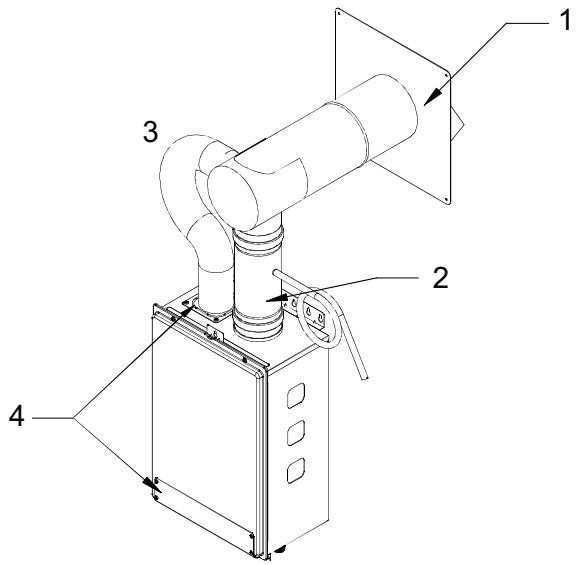

Models 110, 310, 510				Qty.
5-10" Sidewall Thickness Direct Vent, Concentric Termination				
Kit Part Number: 100112421	1	100112550	Concentric Intake/Exhaust Kit	1
	2	100112549	Universal Appliance Adaptor	1
	3	NA	3" Aluminum Flex	1
	4	100112184	Direct Vent Conversion Kit	1
12-18" Sidewall Thickness Direct Vent, Concentric Termination				**Qty.**
Kit Part Number: 100112420	1	100112551	Concentric Intake/Exhaust Kit	1
	2	100112549	Universal Appliance Adaptor	1
	3	NA	3" Aluminum Flex	1
	4	100112184	Direct Vent Conversion Kit	1

910 Model

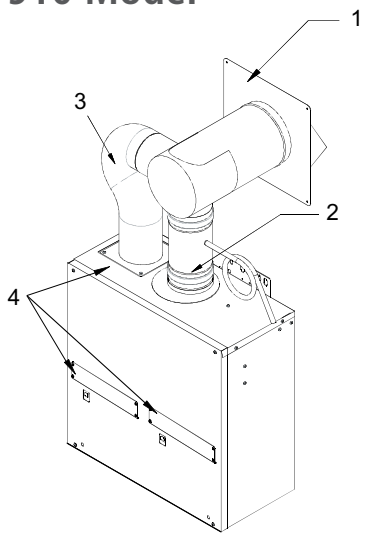

Model 910				Qty.
5-10" Sidewall Thickness Direct Vent, Concentric Termination				
Kit Part Number: 100112606	1	100112604	Concentric Intake/Exhaust Kit	1
	2	100112597	Universal Appliance Adapter	1
	3	NA	5" Aluminum Flex	1
	4	100112186	Direct Vent Conversion Kit	1
12-18" Sidewall Thickness Direct Vent, Concentric Termination				**Qty.**
Kit Part Number: 100112601	1	100112605	Concentric Intake/Exhaust Kit	1
	2	100112597	Universal Appliance Adaptor	1
	3	NA	5" Aluminum Flex	1
	4	100112186	Direct Vent Conversion Kit	1

4” Rooftop Termination

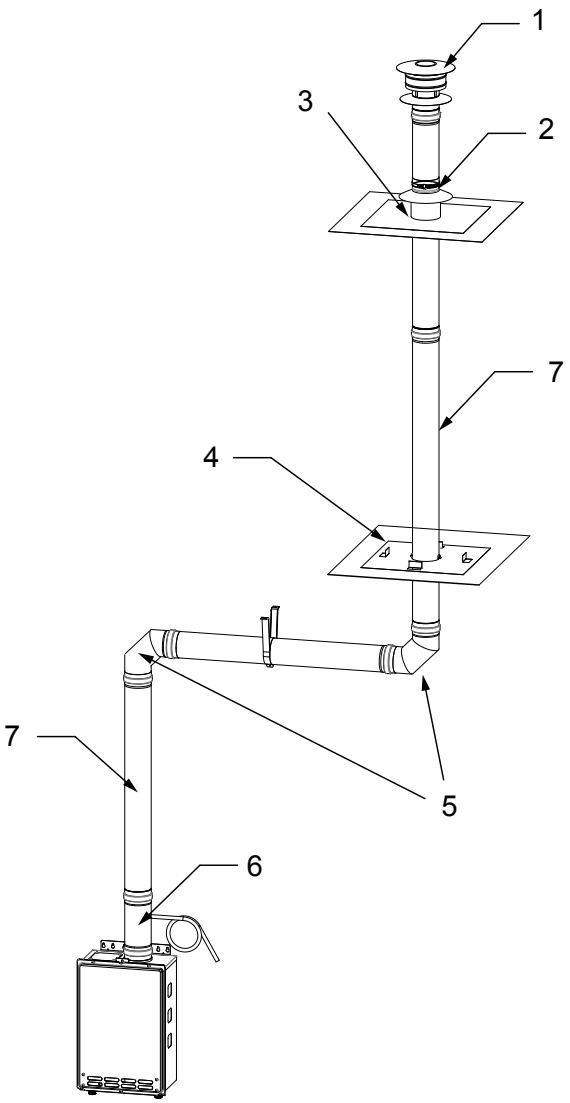

Models 110/U, 310/U, 510/U				Qty.
4” Flat Roof Termination				
Kit Part Number: 100112727	1	100112548	4” Extreme Weather Rain Cap	1
	2	100112410	4” Storm Collar	1
	3	100112412	4” Flat Roof Flashing	1
	4	100112408	4” Vertical Firestop	1
	5	100112400	4” 90 degree Elbow	2
	6	100112549	4” Universal Appliance Adaptor	1
	7	Refer to Accessories Chart	Straight Pipe	TBD

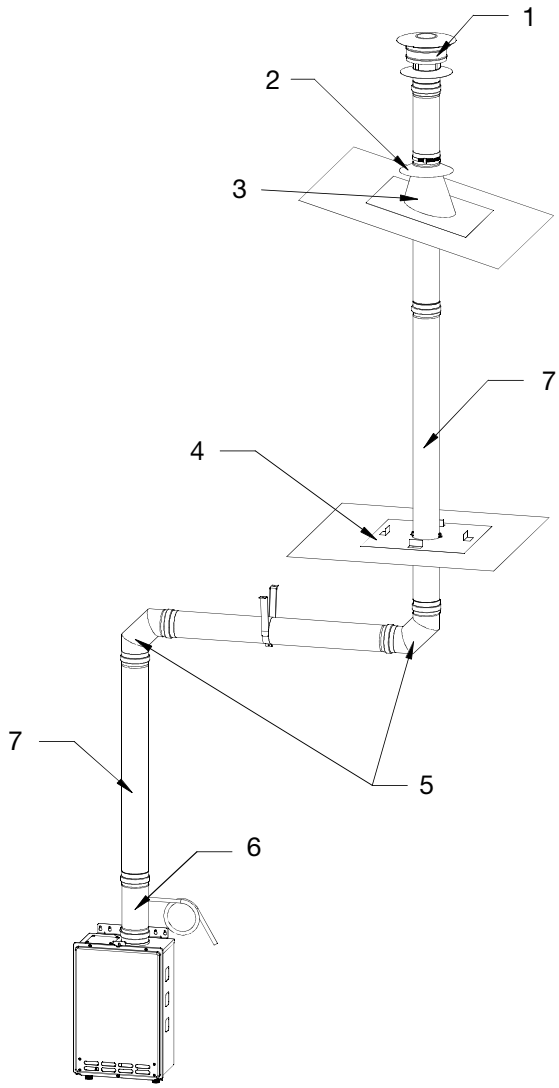

Models 110/U, 310/U, 510/U				Qty.
4” Angled Roof Termination				
Kit Part Number: 100112728	1	100112548	4” Extreme Weather Rain Cap	1
	2	100112410	4” Storm Collar	1
	3	100112411	4” Angeled Roof Flashing	1
	4	100112408	4” Vertical Firestop	1
	5	100112400	4” 90 degree Elbow	2
	6	100112549	4” Universal Appliance Adaptor	1
	7	Refer to Accessories Chart	Straight Pipe	TBD

5” Sidewall Termination

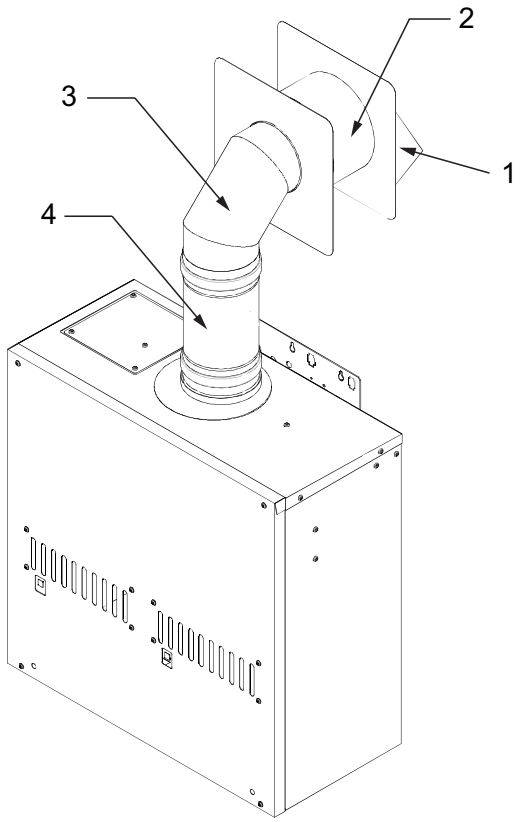

Model 910				Qty.
5" Combustible Sidewall Termination				
Kit Part Number: 100112729	1	100112594	5" Sidewall Hood Terminator	1
	2	100112734	5" Wall Thimble (4.0"-7.0")	1
	3	100112587	5" 90 degree Elbow	1
	4	100112599	5" Female-Female Adaptor	1

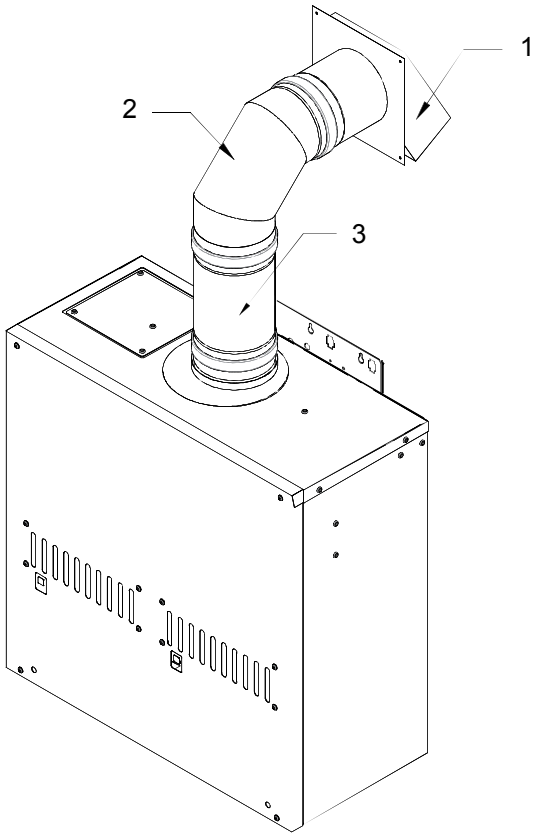

Model 910				Qty.
5" Non-Combustible Sidewall Termination				
Kit Part Number: 100112768	1	100112594	5" Sidewall Hood Terminator	1
	2	100112587	5" 90 degree Elbow	1
	3	100112599	5" Female-Female Adaptor	1

5” Sidewall Termination

(With Condensate Traps)

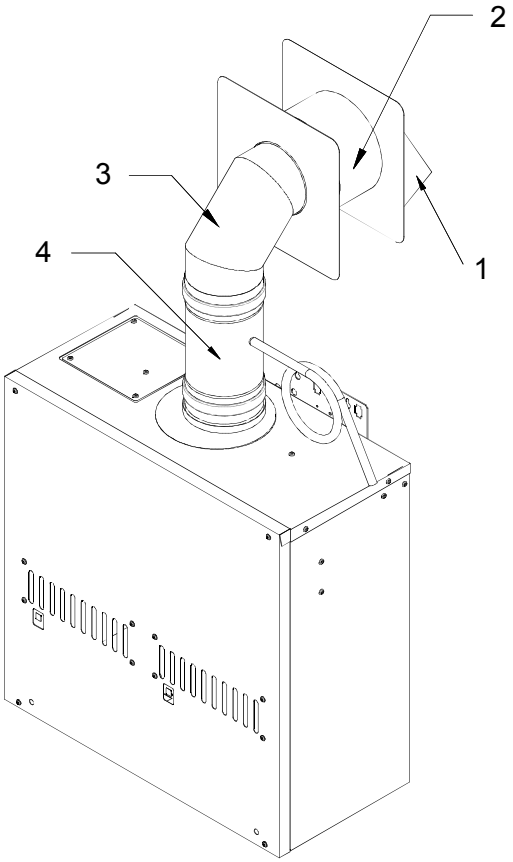

Model 910				Qty.
5" Combustible Sidewall Termination (With Condensate Trap)				
Kit Part Number: 100112777	1	100112594	5" Sidewall Hood Terminator	1
	2	100112734	5" Wall Thimble (4.0"-7.0")	1
	3	100112587	5" 90 degree Elbow	1
	4	100112597	5" Universal Appliance Adaptor	1

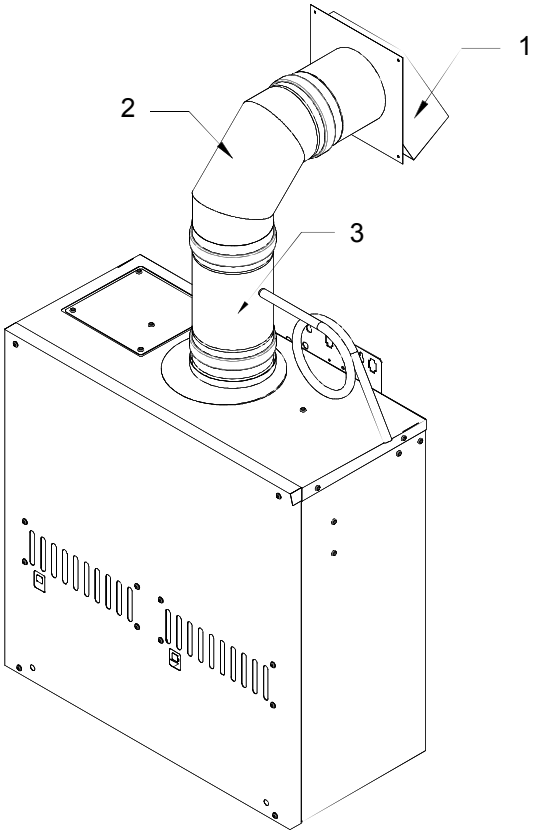

Model 910				Qty.
5" Non-Combustible Sidewall Termination (With Condensate Trap)				
Kit Part Number: 100112778	1	100112594	5" Sidewall Hood Terminator	1
	2	100112587	5" 90 degree Elbow	1
	3	100112597	5" Universal Appliance Adaptor	1

5” Rooftop Termination

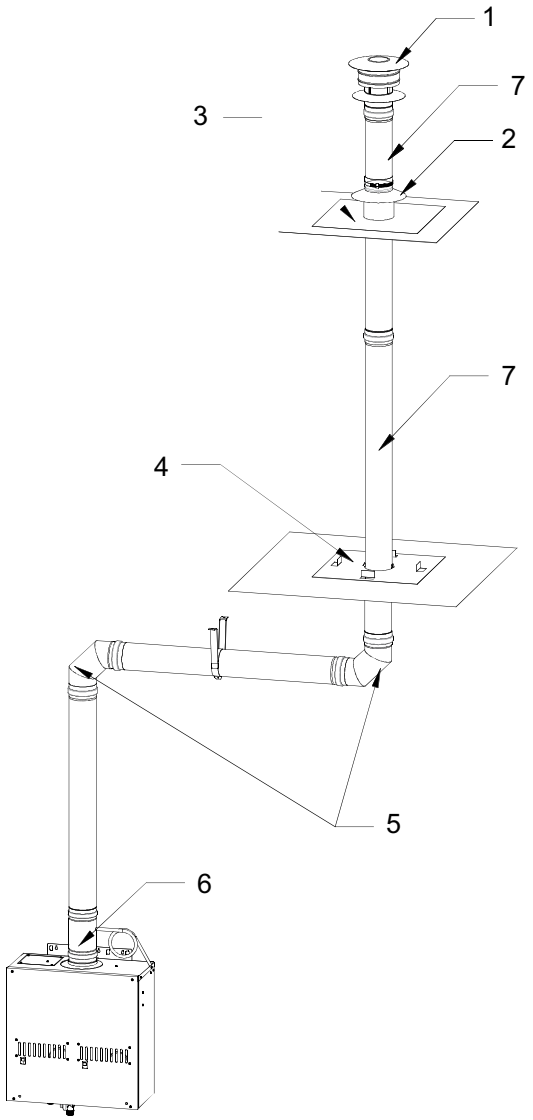

Model 910				Qty.
5” Flat Roof Termination				
Kit Part Number: 100112730	1	100112596	5” Extreme Weather Rain Cap	1
	2	100112590	5” Storm Collar	1
	3	100112592	5” Flat Roof Flashing	1
	4	100112591	5” Vertical Firestop	1
	5	100112587	5” 90 degree Elbow	2
	6	100112597	5” Universal Appliance Adaptor	1
	7	Refer to Accessories Chart	Straight Pipe	TBD

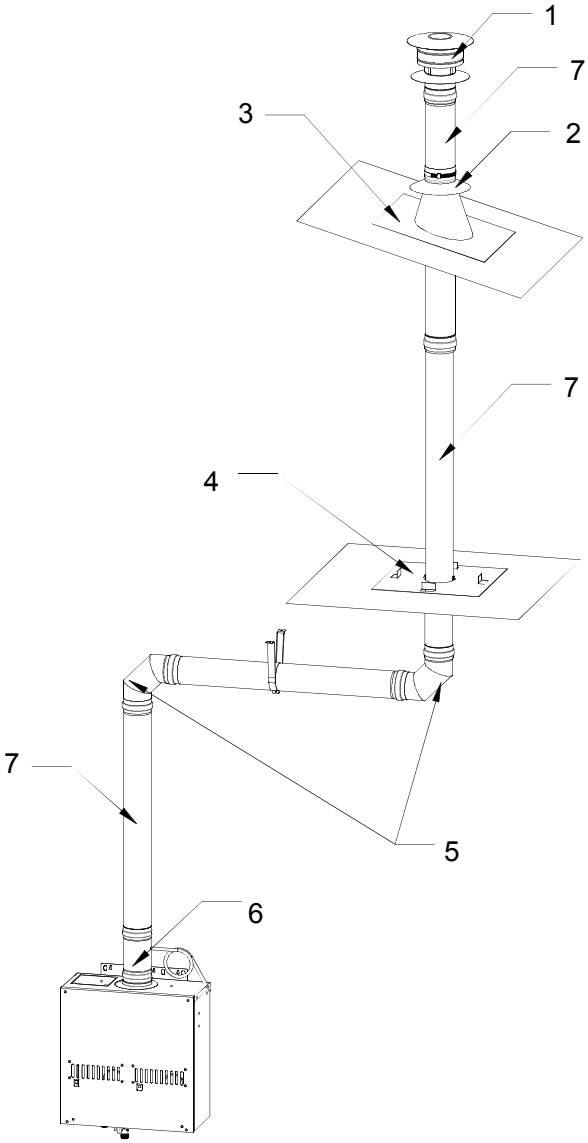

Model 910				Qty.
5” Angled Roof Termination				
Kit Part Number: 100112731	1	100112596	5” Extreme Weather Rain Cap	1
	2	100112590	5” Storm Collar	1
	3	100112593	5” Angled Roof Flashing	1
	4	100112591	5” Vertical Firestop	1
	5	100112587	5” 90 degree Elbow	2
	6	100112597	5” Universal Appliance Adaptor	1
	7	Refer to Accessories Chart	Straight Pipe	TBD

CONCENTRIC VENT SERIES

Horizontal Installation

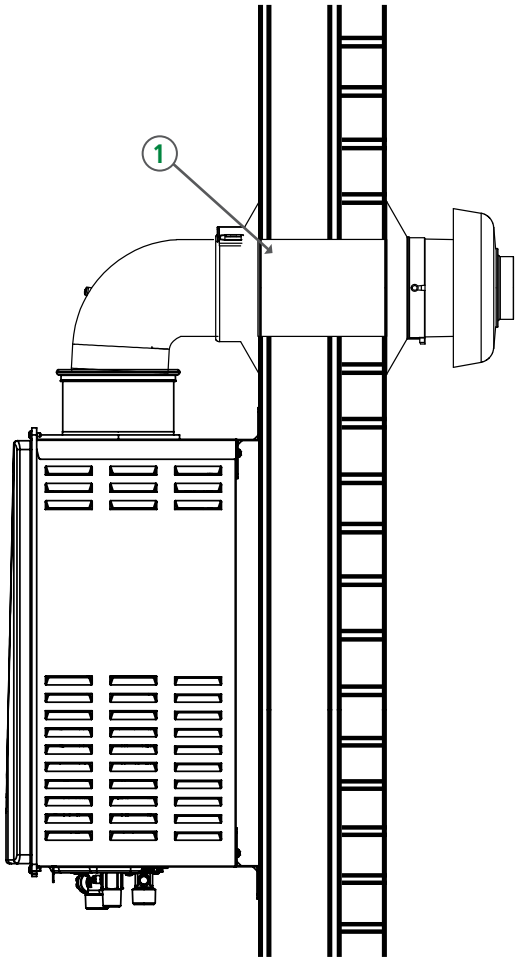

Horizontal Installation		
Models 110C, 310C, 510C		
1	**Standard Sidewall Kits***	100266115 (11.5")
		100266117 (21")
2	**Straight Pipe**	100266133 (10")
		100266134 (19.5")
		100266135 (39")
3	**Elbow**	100266119 (45°) 100266132 (87°)
4	**Condensate Trap**	100266139
5	**Condensate Collector**	100266140

*This kit includes one 87° elbow

Horizontal Installation

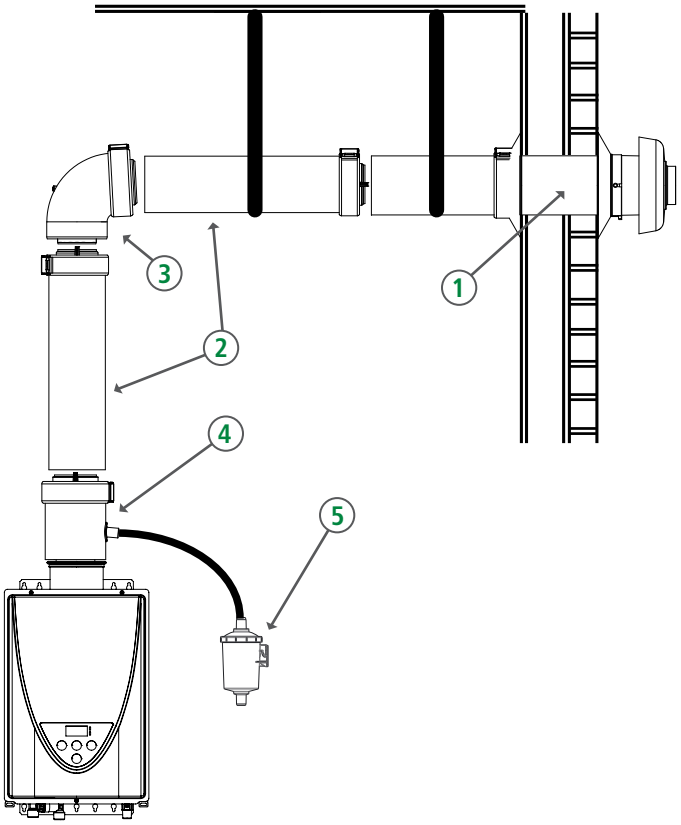

CONCENTRIC VENT SERIES

Vertical Installation

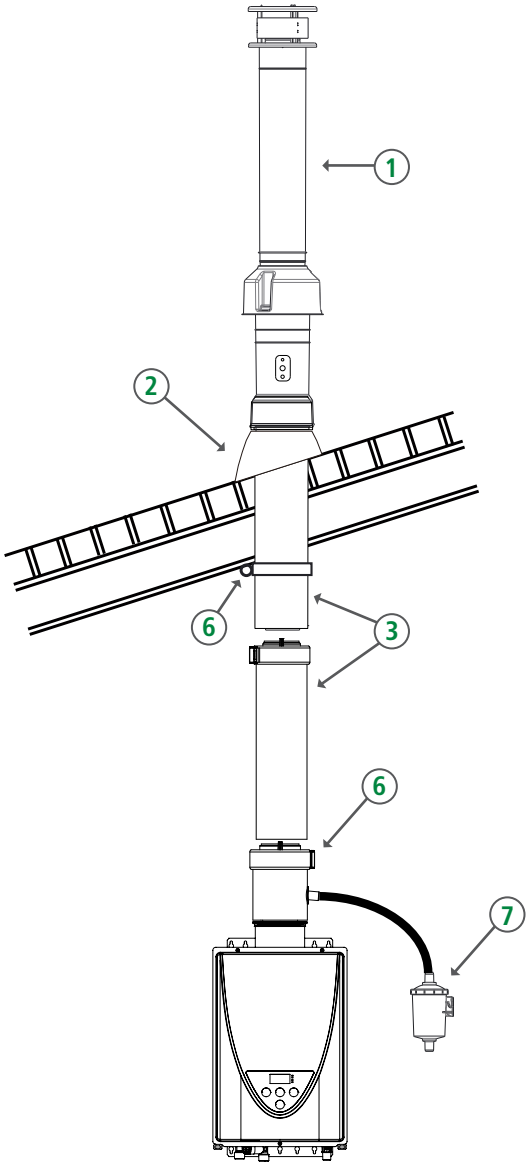

Vertical Installation		
Models 110C, 310C, 510C		
1	**Roof Termination (38")**	100266118
2	**Tile/Shingle Roof Flashing**	100266136 (1/12 to 6/12 pitch)
		100266137 (8/12 to 16/12 pitch)
		100266138 (6/12 to 12/12 pitch)
		100266187 (Flat Roof)
3	**Straight Pipe**	100266133 (10")
		100266134 (19.5")
		100266135 (39")
4	**Pipe Hangers**	100266141
5	**Elbow**	100266119 (45°) 100266132 (87°)
6	**Condensate Trap**	100266139
7	**Condensate Collector**	100266140

Vertical Installation

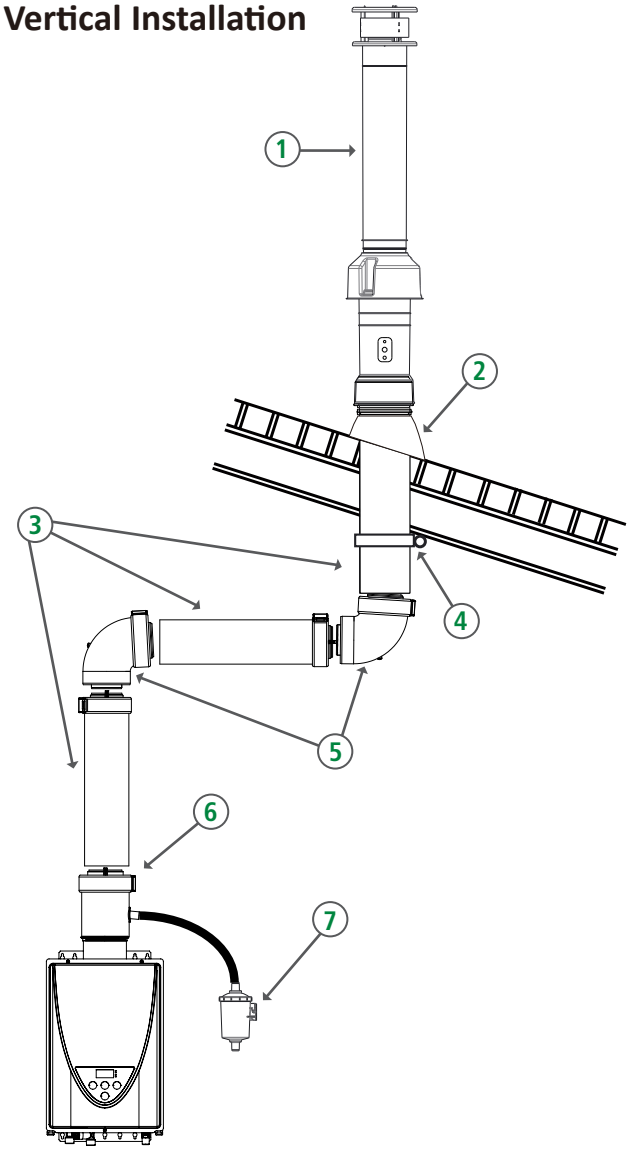

VENTING COMPONENTS

Simple Leak-Proof Gasketed Connections – No Sealant Required. **High Quality** – Category III / IV Stainless Steel.
Versatile – Vertical and Horizontal Terminations. **Convenient** – Vent Kits Available.
UL Listed. All Connections have Heat-Resistant Rubber Gaskets.

NOVA VENT PART #	DESCRIPTION	
Straight Vent Pipe		
100112407	4" Straight pipe - 6" Length	
100112406	4" Straight pipe - 12" Length	
100112404	4" Straight pipe - 24" Length	
100112403	4" Straight pipe - 36" Length	
100112402	4" Straight pipe - 48" Length	
100112580	5" Straight pipe - 6" Length	
100112581	5" Straight pipe - 12" Length	
100112582	5" Straight pipe - 24" length	
100112583	5" Straight pipe - 36" Length	
100112584	5" Straight pipe - 48" Length	
Adjustable Vent Pipe		
100112405	4" Adjustable Pipe (7"- 9.9")	
100112585	5" Adjustable Pipe (7"- 9.9")	
Elbow		
100112401	4" 45 Degree Elbow	
100112586	5" 45 Degree Elbow	
100112400	4" 90 Degree Elbow	
100112587	5" 90 Degree Elbow	
Adaptor		
100112399	4" Female-Female Adaptor	
100112599	5" Female-Female Adaptor	
100112549	4" Universal Appliance Adaptor 3-in-1 (F-F adaptor, condensate drain, & back-flow preventer)	
100112597	5" Universal Appliance Adaptor 3-in-1 (F-F adaptor, condensate drain, & back-flow preventer)	

NOVA VENT PART #	DESCRIPTION	
Backflow Preventer		
100112416	4" Backflow Preventer & F-F Adaptor	
100112598	5" Back-flow Preventer & F-F Adaptor	
Condensation Drain		
100112414	4" Horizontal Drain Tee	
100112588	5" Horizontal Drain Tee	
100112413	4" Vertical Drain Tee	
100112589	5" Vertical Drain Tee	
Support		
100112409	4" Support Strap (1")	
100112600	5" Support Strap (1")	
Wall Thimble		
100112732	4" Wall Thimble (4"-7")	
100112733	4" Wall Thimble (5"-10")	
100112734	5" Wall thimble (4"-7")	
100112735	5" Wall thimble (5"-10")	
4" Sidewall Termination & Thimble Kit		
100112424	Sidewall Vent Terminator (Hood) and Wall Thimble (4"-7")	
100112425	Sidewall Vent Terminator (Hood) and Wall Thimble (5"-10")	

Note: 110/U, 140H, 310/U, 510/U, 240H, 340H, 540H series are compatible with 4" components. 910 series is compatible with 5" components.

NOVA VENT PART #	DESCRIPTION	
Termination		
100112547	4" Termination Tee	
100112595	5" Termination Tee	
100112419	4"Exhaust Sidewall Vent Terminator (Hood)	
100112594	5"Exhaust Sidewall Vent Terminator (Hood)	
100112415	4" Rain Cap	
100112548	4" Extreme Weather Rain Cap	
100112596	5" Extreme Weather Rain Cap	
100112163	3" Concentric PVC Termination	
Firestop		
100112408	4" Firestop	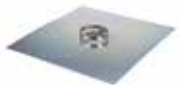
100112591	5" Firestop	
Roof Flashing		
100112412	4" Flat Roof Flashing	
100112592	5" Flat Roof Flashing	
100112411	4" Angled Roof Flashing	
100112593	5" Angled Roof Flashing	
Storm Collar		
100112410	4" Storm Collar	
100112590	5" Storm Collar	
Direct Vent Conversion Kit		
100112184	Direct Vent Conversion Kit for Indoor models 110 / 310 / 510	
100112186	Direct Vent Conversion Kit for Model 910	

NOVA VENT PART #	DESCRIPTION	
Intake Hood (Galvanized)		
100112545	3"	
100112546	4"	
100112547	5"	

Direct Vent, Concentric Sidewall Termination Kit

Includes : DV Conversion Kit, Concentric Termination, Universal Adaptor 3-in-1, Aluminum Flex and Gear Clamp

100112421	5.0" to 10.0" 3" Intake, 4" Exhaust	
100112420	12.0" to 18.0" 3" Intake, 4" Exhaust	
100112602	5.0" to 10.0" 4" Intake, 4" Exhaust	
100112603	12.0" to 18.0" 4" Intake, 4" Exhaust	
100112606	5.0" to 10.0" 5" Intake, 5" Exhaust	
100112601	12.0" to 18.0" 5" Intake, 5" Exhaust	

Note: 110/U, 140H, 310/U, 510/U, 240H, 340H, 540H series are compatible with 4" components. 910 series is compatible with 5" components.

ACCESSORIES

ACCESSORIES			ATI-110C	ATI-110I/U	ATO-110I/U	ATI-310C	ATI-310I/U	ATO-310I/U	ATI-510C	ATI-510I/U	ATO-510I/U	ATI-140	ATO-140	ATI-240	ATO-240	ATI-340	ATO-340	ATI-540H/P	ATO-540H/P	ATIO-910	ACT-199I/O
100112194	Outdoor Vent Cap																			x	
100266729, 100266730	Recess Box Standard Flange				x			x			x		x								
100112188	Pipe Cover			x	x																
100112187				x*	x*		x	x		x	x										
100112190																				x	
100112601														x	x	x	x	x	x		x
100187904												x	x								
100112691	Multiple Unit Controller								x	x*	x*							x	x	x	x
100112183	Remote Temperature Controller			x	x		x	x													
100112155										x	x									x	
100209924			x	x*	x*	x	x*	x*	x	x*	x*	x	x	x	x	x	x	x**	x**		
100276687																		x***	x***		
100112572																					x
100112156	Isolation Valves (Lead Free)		x	x	x	x	x	x	x	x	x	x	x	x	x	x	x	x	x		x
100112255																				x	
100112159	Neutralizer											x	x	x	x	x	x	x	x		x
100113129	PVC Adapter for Common Venting													x		x		x			x
100113130	Non-Return Valve for Common Venting													x		x		x			x
100291509	Product Preservers® Anti-Scale System		x	x	x	x	x	x	x	x	x	x	x	x	x	x	x	x	x	x	x
100291510	Product Preservers Replacement Cartridge		x	x	x	x	x	x	x	x	x	x	x	x	x	x	x	x	x	x	x

*Compatible with Ultra-Low NOx models only
**Compatible with 540H models only
***Compatible with 540P models only

Hard Water and Tankless Heaters

Hard water can adversely affect plumbing systems, from water piping to water fixtures and even down to the water heating system. For piping and fixtures, hard water can create more pressure loss and reduce water flow. For water heaters, it can even reduce energy efficiency and damage the heater. This is especially true for tankless water heaters and it is important to understand what hard water is, what hard water does, and how to protect your tankless water heater from possible damage caused by hard water.

What is hard water and hard water scale?

Very simply, hard water is defined as water that has a high mineral content, specifically in magnesium and calcium (Ca^{2+} and Mg^{2+} ions). Hard water is not considered a health risk and these minerals generally remain dissolved in the water. However, the problems arise when the minerals precipitate out of the water and leave behind a solid mineral buildup. This buildup is called hard water scale, and it is this scale that reduces water flow through pipes and fixtures, reduces the energy efficiency of water heating equipment and, at worst, causes irreversible damage to the heat exchangers within tankless water heaters. It is important to note that the likelihood of scale formation is only based on the hardness levels of the water and the temperature of the water, not on the material the scale is adhering to. For example, hard water scale would form equally on a copper surface as it would on a stainless steel surface, given the same hardness level and temperature of water.

What does hard water scale do to my water heater?

When hard water scale forms a layer coating on the inside wall of a tankless heat exchanger fin pipe, it acts as a thermal insulator. This insulation effectively prevents a significant amount of heat from the burners to properly transfer into the water within the piping. Because the heat is not transferring into the water, the heat exchanger material is forced to retain this excess heat, eventually overheating and becoming damaged. Once the material has degraded enough, the heat exchanger piping eventually gives way and water leakage occurs.

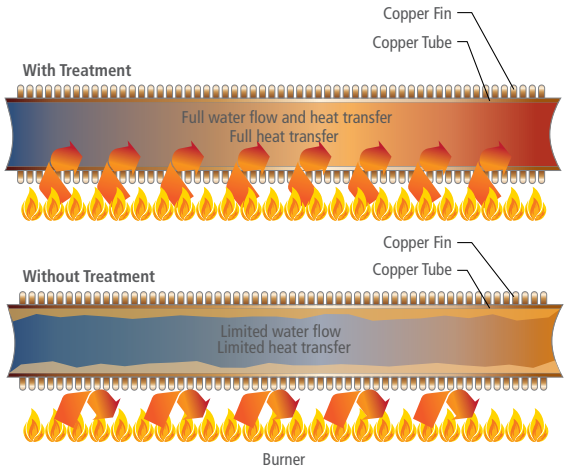

Picture shows a clean HX with treatment.

Scale buildup from untreated water.

How is the hardness of water measured?

Water hardness is measured in either parts per million (ppm) or grains per gallon (gpg). Anything that measures above 3 gpg is generally considered hard (United States Geological Survey) and it is advised at this point to look into water treatment. The U.S. Department of Interior and the Water Quality Association have classified water hardness under several levels:

CLASSIFICATION	mg/L OR PPM (PARTS PER MILLION)	GPG (GRAINS PER GALLON)
Soft	0 - 17	0 - 1
Slightly Hard	17 - 60	1 - 3.5
Moderately Hard	61 - 120	3.5 - 7.0
Hard	121 - 180	7.0 - 10.5
Very Hard	180 and above	10.5 and above

Where is hard water found?

Hard water is everywhere. In fact, more than 85% of American homes have hard water.

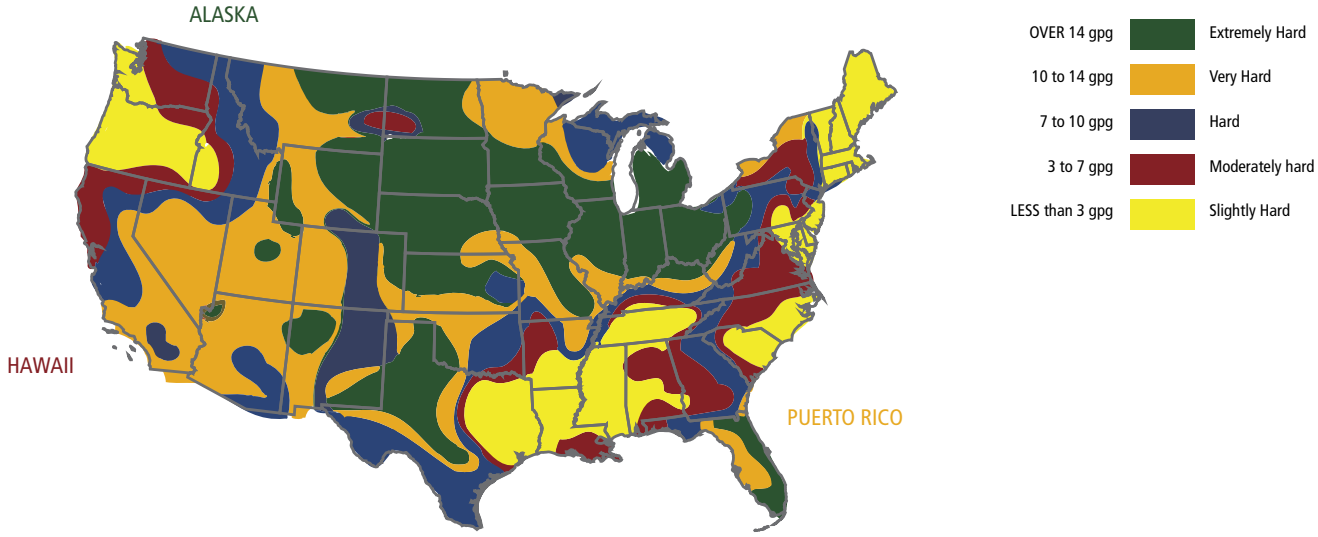

How do I prevent hard water scale?

Fortunately, there are quite a few great options to choose from when looking to protect water heating equipment from scale buildup. These solutions range in cost, maintenance and application, so it is always best to consult with water treatment professionals before making the final decision on a water treatment solution.

Product Preservers®: Prevents scale by transforming dissolved hardness minerals into harmless, inactive microscopic crystal particles. These crystals stay suspended in the water and are passed to drain.

- This system does not add chemicals to the water or require electricity. It is virtually maintenance free only requiring a simple filter change every two years.

Ion exchanger water softeners: Water softeners are probably the most common solution used today for eliminating hard water. Calcium and magnesium ions are removed from the water and replaced with sodium ions. Without the calcium and magnesium, hard water scale cannot form.

Siliphos: Interferes with the ability of (calcium and magnesium) scale to crystallize. The suspended scale stays in the water and goes down the drain.

Product Preservers® protects your tankless heat exchanger from scale formation.

Refer to the chart to the right to properly size for your application.

Flow Rate Based Ground Water Temperature (assume 120°F Set point)

		Tankless Model	110/U/C	310/U/C	510/U/C	140H	240H	340H	540H/P	910	CT-199
Ground Water Temperature (°F)	Warmer Climate	85°F	6.6	8	9.3	6.4	6.6	8.0	10.0	14.5	10.0
		80°F	5.7	7.8	8.2	5.6	6.6	8.0	9.5	14.5	9.5
		75°F	5.1	6.9	7.3	5.0	6.6	7.6	8.4	13.5	8.4
		70°F	4.6	6.2	6.5	4.5	6.1	6.8	7.6	12.2	7.6
		65°F	4.2	5.7	5.9	4.1	5.5	6.2	6.9	11.0	6.9
		60°F	3.8	5.2	5.4	3.7	5.1	5.7	6.3	10.1	6.3
		55°F	3.5	4.8	5.0	3.4	4.7	5.3	5.8	9.4	5.8
	Colder Climate	50°F	3.3	4.5	4.7	3.2	4.3	4.9	5.4	8.7	5.4
		45°F	3.1	4.2	4.4	3.0	4.1	4.6	5.0	8.1	5.0
		40°F	2.9	3.9	4.1	2.8	3.8	4.3	4.7	7.6	4.7
		35°F	2.7	3.7	3.8	2.6	3.6	4.0	4.5	7.2	4.5

	100291509 Product Preservers® Anti-Scale System
	Requires multiple units

Models

I = Indoor O= Outdoor

			Connection: Gas/Water Power	Venting Intake Exhaust	Easy-Link (EL) Multi-Unit (MU)	Temperature (with remote)	GPM (Max) Per Unit	Uniform Energy Factor	Max BTU/h	Dimension/ Weight
Condensing	140H Series ATI-140 ATO-140	High efficiency ultra-low NOx condensing tankless. 3″ PVC venting. 0″ clearance to combustible.	1/2″ Gas 3/4″ Water 120 VAC	Intake & Exhaust 3″, 70′ Max, 5 elbow Max OR 4″, 100′ Max, 5 elbow Max	N/A	120 - 140 (100 - 140)	6.6	I: 0.90 O: 0.91	120,000	H = 22-7/8″ W = 13-7/8″ D = 10-3/4″ 44 lbs
Condensing	240H Series ATI-240 ATO-240	High efficiency ultra-low NOx condensing tankless. 3″ PVC venting. 0″ clearance to combustible.	3/4″ Gas/Water 120 VAC	Intake & Exhaust 3″, 70′ Max, 5 elbow Max OR 4″, 100′ Max, 5 elbow Max	N/A	120 - 140 (100 - 140)	6.6	I: 0.94 O: 0.95	160,000	H = 23-5/8″ W = 17-3/4″ D = 11-3/4″ 58 lbs
Condensing	340H Series ATI-340 ATO-340	High efficiency ultra-low NOx condensing tankless. 3″ PVC venting. 0″ clearance to combustible.	3/4″ Gas/Water 120 VAC	Intake & Exhaust 3″, 70′ Max, 5 elbow Max OR 4″, 100′ Max, 5 elbow Max	N/A	120 - 140 (100 - 140)	8.0	I: 0.95 O: 0.94	180,000	H = 23-5/8″ W = 17-3/4″ D = 11-3/4″ 58 lbs
Condensing	540H Series ATI-540 ATO-540	High efficiency ultra-low NOx condensing tankless. 3″ PVC venting. 0″ clearance to combustible.	3/4″ Gas/Water 120 VAC	Intake & Exhaust 3″, 70′ Max, 5 elbow Max OR 4″, 100′ Max, 5 elbow Max	(EL) 4 units (MU) 20 units	120 - 160 (100 - 160)	10.0	I: 0.93 O: 0.95	199,000	H = 23-5/8″ W = 17-3/4″ D = 11-3/4″ 59 lbs
Condensing	540P Series ATI-540P ATO-540P	High efficiency ultra-low NOx condensing tankless with integrated recirculation pump.	3/4″ Gas/Water 120 VAC	Intake & Exhaust 3″, 70′ Max, 5 elbow Max OR 4″, 100′ Max, 5 elbow Max	(EL) 4 units	120 - 140 (100 - 140)	10.0	I: 0.93 O: 0.95	199,000	H = 23-5/8″ W = 17-3/4″ D = 11-3/4″ 59 lbs
Non-Condensing Low NOx	110 Series ATI-110 ATO-110	Great for apartments, condos and summer cabins.	3/4″ Gas/Water 120 VAC	I Model: 3″ Intake, 50′ Max 4″ Exhaust, 50′ Max	N/A	113°F, 122°F, 131°F, 140°F (99 - 167)	6.6	I: 0.79 O: 0.79	140,000	H= 20-1/4″ W= 13-3/4″ D= 7-3/4″ 33 lbs
Non-Condensing Low NOx	310 Series ATI-310 ATO-310	Adds 1 more shower over the 110 at minimal increase in cost.	3/4″ Gas/Water 120 VAC	I Model: 3″ Intake, 50′ Max 4″ Exhaust, 50′ Max	N/A	113°F, 122°F, 131°F, 140°F (99 - 167)	8.0	I: 0.80 O: 0.80	190,000	H= 20-1/4″ W= 13-3/4″ D= 9-1/2″ 38 lbs
Non-Condensing Low NOx	510 Series ATI-510 ATO-510	Well suited for light commercial applications. Commerical-grade copper	3/4″ Gas/Water 120 VAC	I Model: 3″ Intake, 50′ Max 4″ Exhaust, 50′ Max	(EL) 4 units	104°F, 113°F, 122°F, 140°F (100 - 176)	10.0	I: 0.80 O: 0.80	199,000	H= 20-1/4″ W= 13-3/4″ D= 9-1/2″ 39 lbs

Models

I = Indoor O= Outdoor

			Connection: Gas/Water Power	Venting Intake Exhaust	Easy-Link (EL) Multi-Unit (MU)	Temperature (with remote)	GPM (Max) Per Unit	Uniform Energy Factor	Max BTU/h	Dimension/ Weight
Non-Condensing Ultra-Low NOx	110C Series ATI-110C-N	Great for apartments, condos and summer cabins.	3/4" Gas/Water 120 VAC	3" / 5" Concentric, 43' Max	N/A	120 - 140 (100 - 140)	6.6	0.81	140,000	H= 20-1/4" W= 13-3/4" D= 7-3/4" 33 lbs
Non-Condensing Ultra-Low NOx	310C Series ATI-310C-N	Adds 1 more shower over the 110 at minimal increase in cost.	3/4" Gas/Water 120 VAC	3" / 5" Concentric, 43' Max	N/A	120 - 140 (100 - 140)	8.0	0.82	190,000	H= 20-1/4" W= 13-3/4" D= 9-1/2" 38 lbs
Non-Condensing Ultra-Low NOx	510C Series ATI-510C-N	Well suited for light commercial applications. Commerical-grade copper	3/4" Gas/Water 120 VAC	3" / 5" Concentric, 43' Max	(EL) 4 units (MU) 20 unit	104 - 160 (100 - 160)	10.0	0.81	199,000	H= 20-1/4" W= 13-3/4" D= 9-1/2" 39 lbs
Non-Condensing Ultra-Low NOx	110U Series ATI-110U ATO-110U	Great for apartments, condos and summer cabins.	3/4" Gas/Water 120 VAC	I Model: 3" Intake, 60' Max 4" Exhaust, 60' Max	N/A	120 - 140 (100 - 140)	6.6	I: 0.81 O: 0.81	140,000	H= 20-1/4" W= 13-3/4" D= 7-3/4" 33 lbs
Non-Condensing Ultra-Low NOx	310U Series ATI-110U ATO-110U	Adds 1 more shower over the 110 at minimal increase in cost.	3/4" Gas/Water 120 VAC	I Model: 3" Intake, 60' Max 4" Exhaust, 60' Max	N/A	120 - 140 (100 - 140)	8.0	I: 0.82 O: 0.82	190,000	H= 20-1/4" W= 13-3/4" D= 9-1/2" 38 lbs
Non-Condensing Ultra-Low NOx	510U Series ATI-110U ATO-110U	Well suited for light commercial applications. Commerical-grade copper	3/4" Gas/Water 120 VAC	I Model: 3" Intake, 60' Max 4" Exhaust, 60' Max	(EL) 4 units (MU) 20 units	120 - 140 (100 - 160)	10.0	I: 0.82 O: 0.81	199,000	H= 20-1/4" W= 13-3/4" D= 9-1/2" 39 lbs
Commercial	910 Series ASME model available ATIO-910	Generates Most GPM in tankless industry. 14.5 GPM (Max). Commercial-grade copper alloy. LED display	1" Gas/Water 120 VAC	5" Intake, 50' Max 5" Exhaust, 50' Max	(EL) 4 units (MU) 10 units	100 - 185 (100 - 185)	14.5 (Up to 145 GPM max with 10 unit system)	Thermal Efficiency NG: 80.2% LP: 82.4%	380,000	H= 25-1/4" W= 24-3/4" D= 11-3/4" 112 lbs
Commercial	CT-199 Series ACT-199I ACT-199O	High efficiency ultra-low NOx condensing tankless. 3" PVC venting. 0" clearance to combustible.	3/4" Gas/Water 120 VAC	Intake & Exhaust 3", 70' Max, 5 elbow Max OR 4", 100' Max, 5 elbow Max	(EL) 4 units (MU) 20 units	100 - 185 (100 - 185)	10.0 (Up to 200 GPM max with 20 unit system)	Thermal Efficiency 96% I: 0.93 O: 0.95	199,000	H = 23-5/8" W = 17-3/4" D = 11-3/4" 59 lbs

500 Tennessee Waltz Pkwy
Ashland City, TN 37015
Toll Free: 877.737.2840

599 Hill Street West
Fergus, ON N1M 2X1
Tel: 519.843.1610
Fax: 519.787.5500
Toll Free: 877.877.4953