MOEN®

Specifications

DESCRIPTION
- Duralock™ quick connect installation
- Metal construction with various finishes identified by suffix
- Includes non-metal push-down waste assembly
- 1/2'' IPS connections

OPERATION
- Lever style handles
- Hot side counterclockwise to open (clockwise to close)
- Cold side clockwise to open (counter-clockwise to close)

FLOW
- Water usage is limited to these maximum flow rates as indicated by the corresponding product markings
- 1.2 gpm max (4.5 L/min) at 60 psi

CARTRIDGE
- 1234 cartridge design
- Nonmetallic and stainless steel material

STANDARDS
- Third party certified at WaterSense®, ASME A112.18.1/CSA B125.1, and all applicable requirements referenced therein including NSF 61/9 & 372
- Products marked with 1.2 gpm are compliant with California water efficiency regulations
- Complies with California Proposition 65 and with the Federal Safe Drinking Water Act
- ADA for lever handles

WARRANTY
- Lifetime limited warranty against leaks, drips and finish defects to the original consumer purchaser
- 10 years limited warranty when used in a multifamily installation
- 5 years limited warranty if used in commercial installations

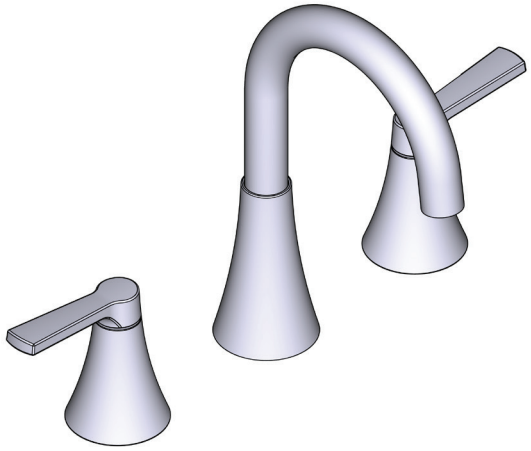

Mikah™

Two-Handle Widespread Lavatory Faucet

MODELS: 84312 series

NOTE: SPOUT INSTALLS THROUGH 1-1/8'' MIN. DIA. HOLE. VALVES INSTALL THROUGH 1-8''MIN. DIA. HOLE. For Deck Thickness 1-3/8'' to 3'', use service kit number 115001. Valves install through 1-1/4'' dia. hole.

WaterSense Meets EPA Criteria
Certified by IAPMO R&T

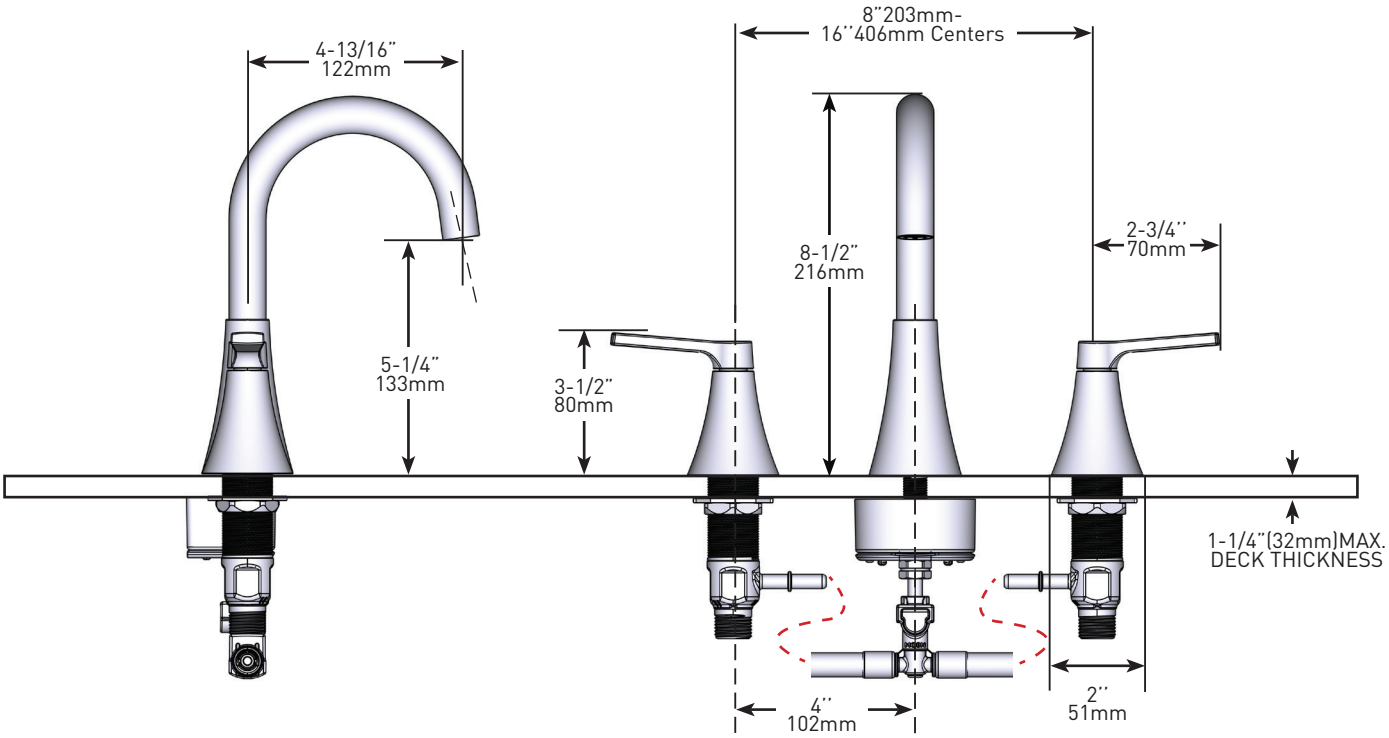

CRITICAL DIMENSIONS DO NOT SCALE

07/12/2022 SPC2329 500002569
Released 01